Utah State University
DigitalCommons@USU

Physics Capstone Project | Physics Student Research

5-4-2014

GASPACS Structure: Designing to Survive

John Ellis

Recommended Citation
Ellis, John, "GASPACS Structure: Designing to Survive" (2014). *Physics Capstone Project.* Paper 9.
http://digitalcommons.usu.edu/phys_capstoneproject/9

This Report is brought to you for free and open access by the Physics Student Research at DigitalCommons@USU. It has been accepted for inclusion in Physics Capstone Project by an authorized administrator of DigitalCommons@USU. For more information, please contact becky.thoms@usu.edu.

GASPACS Structure

Designing to Survive

John Ellis
Mentor: Dr. Jan Sojka
USU Physics Department
May 4, 2014

Contents

Table of Figures 1

Terminology 1

Abstract 2

Background 3

Mission Variations 3

Process 4

SolidWorks Model 4

Vibrational Analysis Model 7

Thermal Analysis Model 8

Conclusion 10

Works Cited 11

Table of Figures

Figure 1: GASPCAS MK I-V.....6

Figure 2: GASPACS MK VI with Part Callouts.....6

Figure 1: GASPACS Pre-Test Solid Model.....7

Figure 4: GASPACS Post-Test, Deformation Color Contour.....7

Figure 5: GASPACS Post-Test Temperature Color Contour.....9

Terminology

CubeSat: A 10 cm cubic satellite that is deployed from a P-POD. Dimensions standardized by California Polytechnic State University.

GASPACS: Get Away Special Passive Attitude Control Satellite. The current project of the USU GAS Team.

P-POD: Poly-PicoSatellite Orbital Deployer, developed and built by CalPoy. It is a mechanical and electronic device that contains up to three 1U CubeSats and deploys them when the launch vehicle enters orbit

LEO: Low Earth Orbit. An orbit typically at or below 160 km altitude.

Ram Vector: The vector that points along the direction of orbit.

Nadir Vector: The vector that points directly towards Earth.

Zenith Vector: The vector that points directly away from Earth.

ELaNa: Educational Launch of NanoSatellites. A NASA program that awards free launches of small satellites to projects whose missions advance NASA's goals in some way.

PDR: Preliminary Design Review. A presentation of current designs and concepts that are then evaluated, usually by other engineers and scientists, on the basis of plausibility and completeness.

SDL: Space Dynamics Laboratory. A partially USU funded research company that has and continues to work closely with the GAS Team.

Abstract

The USU Get Away Special (GAS) Team is creating a self-stabilizing CubeSat through the utilization of a deploying boom and panel combination. Commercially available CubeSat frame cannot accommodate any deployable panels and have no space to fit a packed boom. Therefore a custom frame needed to be designed from the ground up to meet the mission needs while still conforming to the designated specifications produced by Cal Poly. The frame needs to be a 10 cm cube, hold together during liftoff, and not melt the avionics boards within the satellite. Several models were designed and tested through the use of computer programs. First, *SolidWorks®* was used to develop a solid model. Then, the geometry was imported into *FEMAP®* where the vibrational characteristics were tested. No

erroneous behavior was observed, thus clearing the model for the last test. The last test was the thermal behavior of the satellite. The geometry was loaded into *COMSOL®* and tested to see if it reached too high of temperatures. The hottest the boards ever reached was 62 degrees Celsius, which is within their survivable range (Wertz, 2011). The frame numerically clears all requirements and the physical prototyping and testing can proceed.

Background

The Utah State University GAS Team has been working on a 1U CubeSat project for over a year and a half. The current mission is to place a self-stabilizing satellite into LEO. The method of self-stabilization will be the deployment of a one meter long boom that will be inflated by an air tight balloon that is coated in a UV hardening epoxy. The deployable back panel connected to the boom will act as an aerodynamic stabilizer keeping the satellite pointed in the Ram direction. This GAS Team mission proposal was accepted for a NASA ELaNa launch and as such, the design of the CubeSat has accelerated quickly. Due to the abnormal requirements of this mission (deployable boom) the standard, commercially available frame would not work. A new frame needed to be designed from the ground up and be tested for survivability in space.

Mission Variations

During the design process, several missions were proposed, evaluated, and eventually deemed unfeasible for different reasons until the current mission. Each mission had a different goal and thus different design requirements. The first mission proposal was for the Low Earth Photographer (LEOP). This satellite would use a gravity gradient effect to stabilize itself pointing in the Nadir direction, take high quality pictures of Earth, and then send them back to a ground station. This was scrapped as pictures of Earth must be sent via an encrypted signal that we do not have the capability to do. The next mission was to flip the satellite 180 degrees, stabilizing in the Zenith direction, and take pictures of stars.

Multiple images would be taken in a sequence then sent down where they could be analyzed and spin rates of the satellite determined. This would allow a quantitative measurement be taken to determine how stable the gravity gradient would make the CubeSat. This mission was put forward with the assumption that the gravity gradient torques would be the dominant force on the satellite. Another member of the GAS team proved that this was false during the summer of 2013. It was shown that in LEO, the dominant force would in fact be air drag on the satellite as there is still atmosphere, however scarce, at this altitude. The mission was then altered to account for this. The CubeSat will still deploy a UV rigidizing boom but use aerodynamic forces to stabilize in the Ram direction instead of the Zenith or Nadir directions. The CubeSat will have a forward pointing camera that will use both the horizon and the stars to determine tumble rates. These requirements are what the current model of GASPACS is designed to meet.

Process

SolidWorks Model

California Polytechnic University has become the leader in the space community when it comes to any CubeSat program. It was Cal Poly, with help from Stanford, which standardized the dimensions of the CubeSat and the deployment method (P-POD).They released the CubeSat Design Specifications, a 22 page spec sheet that outlined dimension, parts, materials, and other important design criteria (Simon Lee, 2009). This document goes into great detail on the outside of the satellite, from tolerances to surface roughness. However, the inside space can be used however is deemed necessary by the mission team. To this end, work was begun on the frame with *SolidWorks®*, the GASPACS mission parameters, and the CDS to rough out a new custom frame. Several different frames were designed fitting with the changing mission parameters. The first model, MK I (Figure 1, top left), was designed with ease of assembly at the forefront of the design. However, during the PDR in May of 2013, it was suggested that

the team redesign the structure to more closely resemble the current commercial frame. This was because there were enough self-made parts and equipment for this mission and each non heritage piece would increase the likelihood of failure. Thus the MK I was scrapped and design on MK II (Figure 1, top middle) started.

For the design, the solid model of the commercial frame was loaded onto the computer and then altered to fit the mission needs. The internal space was shrunk to accommodate a deployable panel on the top. The solar panel connection points needed to be altered as shrinking the internal space moved the upper connection point closer to the center of the CubeSat. Also, an empty cavity space was added between the deployable panel and the flight hardware. This cavity would be used to house the boom during takeoff and deployment. This model lacked any kind of deployment mechanism and was based on the star photographer mission. This meant that it was designed to point the camera directly away from Earth. When the discovery was made that the satellite would not stabilize in this fashion, the frame needed to be redesigned. This led To MK III (Figure 1, top right), which accounted for the Ram stabilizing direction and the aero stabilizing effects. It was then decided by the team that a camera should be mounted to take a short video of the boom deploying in addition to the Star Camera on the front. Mk IV (Figure 1, bottom left) had this integrated into it. Then MK V (Figure 1, bottom right) was created as the Star Camera changed models and the extra computer board was placed in the avionics stack. Also, MK V was the first iteration to include a deployment system for the boom. The GAS Team came across a part known as a FrangiBolt manufactured by TiNi Aerospace®. This part was specifically designed for securing deployables in space flight. SDL has in fact used it on a CubeSat they recently sent up. Then model MK VI (Figure 2) was designed to house the current, smaller Star Camera and the small boom camera capabilities. MK VI also includes the antenna deployment system on the top of the CubeSat, which will restrain the antennas during launch. After the antennas are deployed, the board no longer serves any purpose and will be deployed along with the back panel during the boom release. MK

VI is the current working prototype and the geometry of this model is what was used for the other analysis performed.

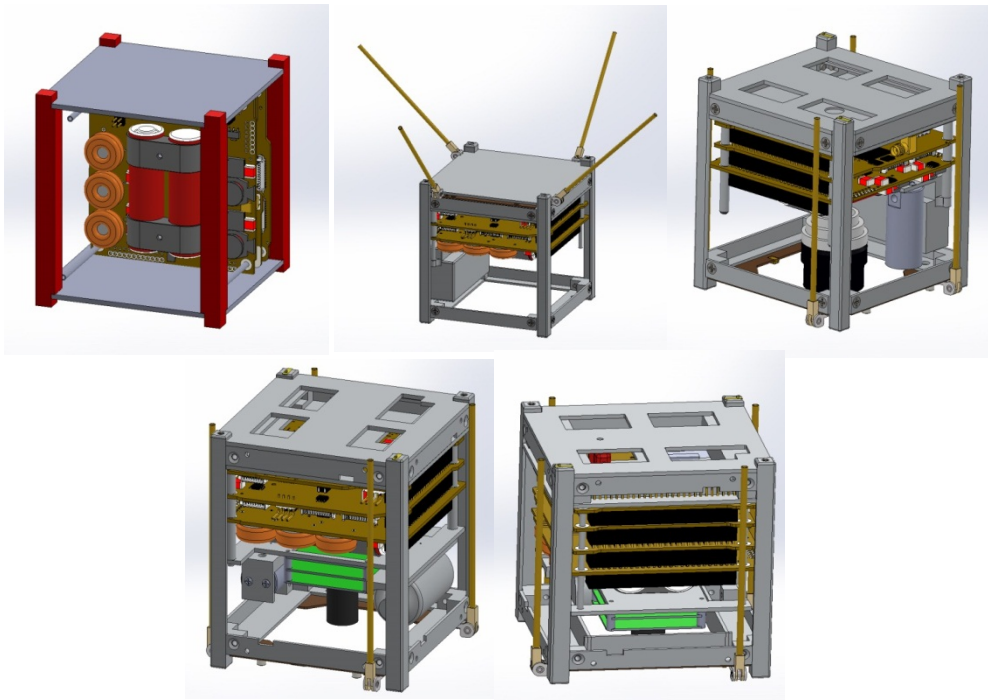

Figure 3: GASPACS MK I-V

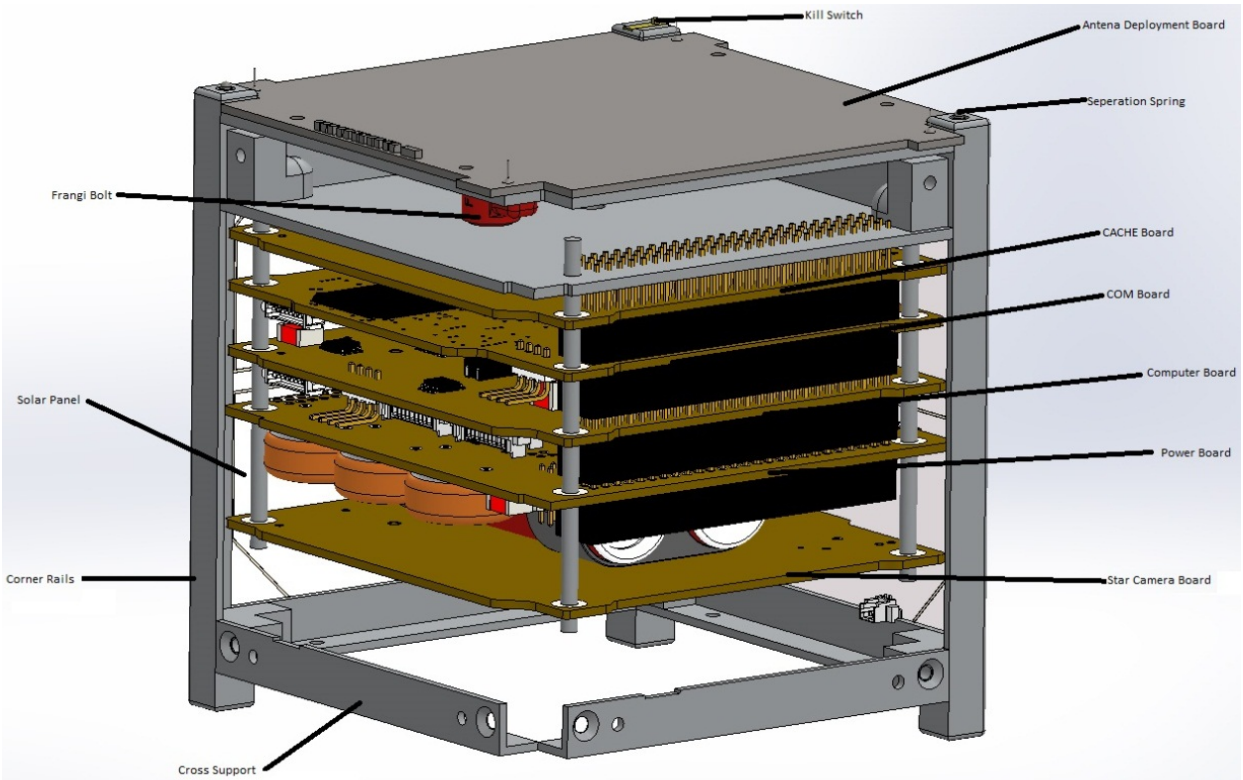

Figure 2: GASPACS MK VI with Part Callouts

Vibrational Analysis Model

One of the requirements set forth by the Cal Poly document is the vibrational response of the CubeSat. Obviously, the satellite cannot shake apart during launch as it will likely damage the other satellites in the P-POD, but it could also damage the main payload. To test the vibrational response of the GASPACS model, the basic geometry of the model was loaded into *FEMAP® (Figure 3)*. The model was then "meshed," creating thousands of points that are connected and where all the equilibrium equations are solved. Each individual piece from the model was connected in the program using rigid elements for screws. This was done as the screws will be far more rigid than the thin aluminum used for the frame, thus the frame itself is going to be the source of any erroneous vibrational behavior. Finally, the model was held in place at the same locations that the P-POD would hold the satellite. Running the program then gave us the lowest ten natural frequencies. Currently, the GAS Team does not have an official launch, and thus no official launch vehicle. As each vehicle induces varying frequencies, the exact specs that frame has to meet are not yet know. However, the lowest frequency, 316 Hz (Figure 4) was within the expected range and around the same values seen in simulations run by SDL. This leads to the conclusion that the model will be acceptable.

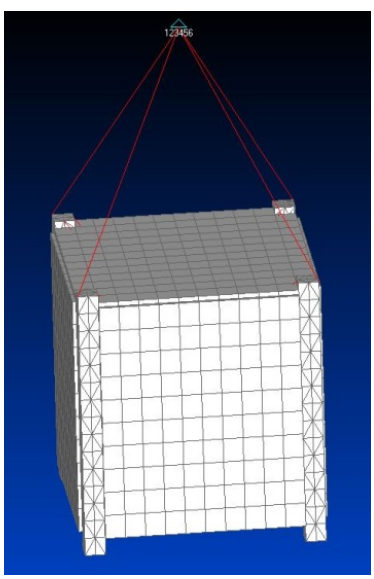

Figure 3: GASPACS Pre-Test Solid Mode

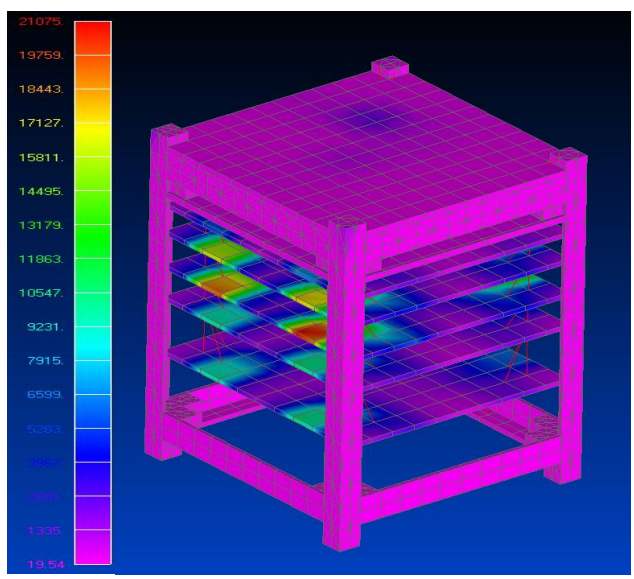

Figure 4: GASPACS Post-Test, Deformation Color Contour (Unit-less scale)

When an official launch vehicle is designated and the worst happens that the frequency needs to be raised, there is an easy solution. The first thing that vibrated at 316 Hz was the avionics stack, as predicted. If it becomes necessary to increase the natural frequency, an easy way to do this would be to secure the stack to the opposite side as well, instead of just the one side it is connected to now.

Thermal Analysis Model

The final hurdle that stood in the way of starting physical testing was to see if the frame would cause an extreme buildup of temperatures within the avionics boards. All of the flight hardware is high quality, highly accurate equipment and as such is expensive and temperamental. All of the boards have a finite temperature window in which they can operate and can fail completely if they get too hot. To verify the frame would allow enough heat transfer from the boards, the geometry and property materials were put into *COMSOL®* and thermal "loads" (Table 1) were applied to it. Two separate models were created in tandem, one for when the satellite was in the Sun and one when it was out of the Sun. On the external surfaces, a time averaged infra-red and radiative flux was applied depending on where the satellite was (Wertz, 2011). Also, emissivity properties of each material needed to be entered (Theodore L. Bergman, 2011) (University of Leicester CubeSat Project, 2008). Then, to get a measurement of the worse-case scenarios, the boards were said to be operating at full capacity (3W) the entire time in the Sun phase and using minimal lower (.8W) during the dark phase. It was then assumed that all of this energy was converted into heat within the boards. The Sun phase model was then started at 300K uniformly and run for 54 minutes, the same time it would spend in the Sun in orbit. The temperature of the boards and frame were then put into the dark phase model as initial conditions and run for 36 minutes. The final temperatures of each model were passed back and forth until a manner of equilibrium appeared. When the temperature equilibrium happened, the frame was seeing a constant swing from 8 to 37 and the boards from 57 to 62 degrees Celsius (Figure 5).

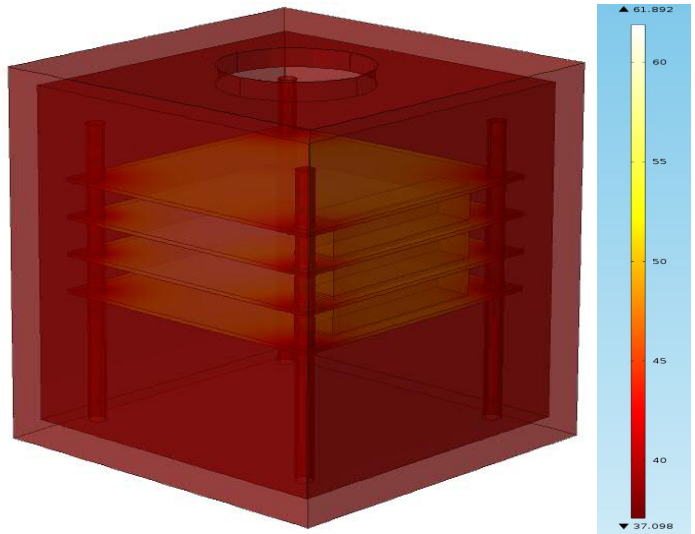

Figure 5: GASPACS Post-Test Temperature Color Contour (Scale in Celsius)

While the frame will not experience any kind of problems from this temperature swing, in fact it can withstand a far greater swing with no ill effect; the boards seem to reach a temperature that could potentially damage them. However, there are two factors that would keep them reaching this dangerous temperature area. First of all, the assumption that the boards are operating at full power while in the Sun is not accurate as the batteries will drain before that phase is over. Thus the boards will be producing less heat during the Sun phase then the model predicts. Secondly, each board comes with a pre-installed temperature sensor and shut off protocol. The avionics would shut down and stop producing any heat at all if they got to close to the dangerous region. Taking both factors into consideration and the temperatures given by the model, it is highly likely that none of the boards will fail or be destroyed by thermal effects.

	Solar	Albedo	Earth IR	Emissivity	Absorptivity
Sun	1333.4	26.5	69.9	.92	.85
Anti-Sun	0	11.5	70	.92	.85
Nadir	154.2	59.6	224.6	.92	.85
Zenith	154.2	0	0	.92	.85
RAM +/-	154.2	18.6	69.7	.09	.03

Table 1: Incident Fluxes and Optical Properties

Conclusion

Keeping the model within the Cal Poly specs, while meeting the ever changing mission requirements, was a difficult task. In the end, a suitable model of GASPACS was designed and numerically tested to see if any disastrous behavior would be present. It was first tested to find the natural frequency, and the results state that it should not fall apart during lift off. It was then run through simulated Sun and dark phases to see if the boards would fail or even melt. The temperature swings seen in the simulation were on the extreme end of what could be expected but it is easily justified that they would not get that hot during their orbital lifetime. After running these tests, the GASPACS frame MK VI is ready to be physically machined out, assembled and tested to see if it meets all requirements, both official and team specific.

Works Cited

Simon Lee, A. H. (2009, August 1). CubeSat Design Spesifications. California: Cal Poly SLO.

Theodore L. Bergman, A. S. (2011). *Fundamentals of Heat and Mass Transfer, Seventh Edition.* Jefferson City: R.R. Donnelley.

University of Leicester CubeSat Project. (2008, Dec 3). *Thge Technology of Solar Cells*. Retrieved from CubeSat wiki: http://cubesat.wikidot.com/the-technology-of-solar-cells

Wertz, J. R. (2011). *Space Mission Engineering: The New SMAD.* Hawthorne, CA: Microcosm Press.