Utah State University
DigitalCommons@USU

All Physics Faculty Publications | Physics

1973

Ionization-enhanced diffusion: Ion implantation in semiconductors

J Bourgoin

David Peak
Utah State University

J W. Corbett

Follow this and additional works at: http://digitalcommons.usu.edu/physics_facpub

Part of the Physics Commons

Recommended Citation
Ionization-enhanced diffusion: Ion implantation in semiconductors, J. Bourgoin, J. Appl. Phys. 44, 3022 (1973) ; doi:10.1063/1.1662700 (6 pages)

This Article is brought to you for free and open access by the Physics at DigitalCommons@USU. It has been accepted for inclusion in All Physics Faculty Publications by an authorized administrator of DigitalCommons@USU. For more information, please contact becky.thoms@usu.edu.

Ionization-enhanced diffusion: Ion implantation in semiconductors*

J. Bourgoin†, D. Peak, and J. W. Corbett

Physics Department, State University of New York at Albany, Albany, New York 12222
(Received 21 February 1973)

A model for the diffusion of implanted interstitials during implantation is introduced and shown to be able to account for the tails observed in ion profiles. It is argued that mechanisms of ionization-enhanced diffusion can explain some of the anomalous diffusion mechanisms observed in semiconductors. Indications for the existence of such mechanisms in the field of ion implantation in semiconductors are discussed.

I. INTRODUCTION

An ion penetrating a solid loses energy in collisons with the electrons and the nuclei of the solid until the ion eventually comes to rest. The theory of Lindhard, Scharff, and Schiøtt[1] predicts that the distribution $\rho(x)$ in depth x of implanted atoms in amorphous solids is a Gaussian function. Experimentally, for bombardment in a random direction, the distributions observed in both amorphous and crystalline solids have the shape predicted, although the results vary appreciably in many of the parameters which characterize the implanted material and the implantation itself.[2] In crystalline solids, for implantation in channeled as well as in nonchanneled directions, $\rho(x)$ exhibits an additional, more or less pronounced, "tail"; tails are observed in a variety of implanted materials (group-IV semiconductors, semiconducting compounds, or metals) and for a large variety of ions. In misoriented crystals a tail corresponds to the deviation from the Gaussian distribution [Fig. 1(a)]; in crystals implanted in a channeling direction the tail—often called in this case the "supertail"—refers to atoms which are located more deeply than one would expect from channeling [Fig. 1(b)]. In both channeled and nonchanneled directions the shape of the tail is similar; the distribution $\rho(x)$ is, approximately, an exponential[3] function (from which we argue that the tails in the two cases can have the same origin). The characteristic length associated with this tail[8] also depends on a large number of parameters,[9] but it is smaller in the case of channeled implantation than in the case of random implantation.

The implanted ion, through the collisions with the nuclei of the solid, creates in its wake a trail of vacancies and self-interstitials of the solid; we will consider here only the case where the implanted ion comes to rest as an interstitial, having escaped becoming a substitutional atom via a replacement collision or a conversion process in which it becomes substitutional by creating a self-interstitial. We distinguish then several regimes in which a tail can (and in various experiments does) occur: (i) the tail can occur *during irradiation* at a temperature at which the vacancy, the self-interstitial, or the implanted interstitial are *normally immobile* (i.e., thermally activated diffusion does not occur); (ii) the tail can occur *during irradiation* at a temperature where the implanted interstitial and perhaps one or more of these defects is *normally mobile*; and (iii) the tail can occur only upon *postirradiation annealing* at an elevated temperature. Among several explanations[10] which have been proposed to account for the existence of such a tail, only two are now considered to have much currency: the diffusion of implanted interstitials, and the scattering of the implanted interstitials into oblique channels. The scattering into oblique channels is not thought to be the major origin of the tail, since it has been shown experimentally[12] that the tail arises from three-dimensional diffusion, even though in some cases that diffusion is "anomalous",[17–20] a point we will return to below. In the case of the diffusion of the implanted interstitial two models have been proposed to account for the observed distribution $\rho(x)$: (i) diffusion of the implanted interstitial in a constant concentration of traps[12] and (ii) diffusion in which the implanted interstitials, the self-interstitials, and the vacancies are all mobile (so-called multistream diffusion[7]). The first model gives an exponential depth dependence while the second (which seems to provide a closer fit for the tail observed in metals) has a power-law dependence. The first model, in our view, cannot provide the general explanation for the appearance of tails, since it is difficult to conceive of the presence, before the implanatation (or the appearance during the implantation), of the requisite large uniform concentration of traps. The second model, of course, requires the mobility of all three types of defects and cannot be the general case either.

In Sec. II we show that the shape of the distribution can be obtained assuming a model in which the implanted ion (alone of the three defects) is mobile during the irradiation. We obtain this result without the steady-state assumption required in the multistream diffusion analysis.[7] We note that an equivalent distribution obtains in the multistream case and in the case of abundant traps; we argue then that the equivalent distribution will occur in all of regime (ii) mentioned earlier, i.e., where the implanted ion and other defects are normally mobile. That is, we argue that the diffusion of defects other than the implanted interstitial will have a distribution equivalent in form (although with different parameters) to that created by the diffusion during implantation of the implanted interstitial alone.

What about regime (i) where the implanted interstitial (and other defects) are normally immobile? We have argued elsewhere[21,22] that the presence of an ionizing beam (such as the implantation beam itself) can lead to "anomalous" diffusion processes. In Sec. III we discuss these anomalous diffusion processes and how they can occur in semiconductors and, to a lesser extent, in metals.

Copyright © 1973 American Institute of Physics

Downloaded 14 Aug 2011 to 129.123.67.59. Redistribution subject to AIP license or copyright; see http://jap.aip.org/about/rights_and_permissions

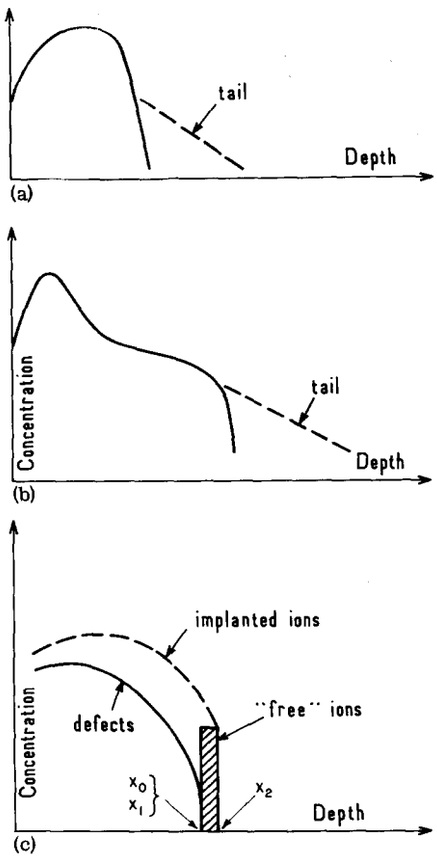

FIG. 1. Schematic representation of the ion profile (concentration vs depth x) for implantation in a random direction (a) and in a channeled direction (b). The tail deviation from the theory (full line) corresponds to the dashed line. (c) Schematic distribution of the free ions not trapped by the defects, which are able to diffuse, together with the defect and ion profiles.

The fact that the tail can be reduced or even suppressed by preirradiation[23–25] in the region where it develops is compatible with our model, but, since slight damage is sufficient to curtail any motion of implanted radiotracers into the tail,[23,26] this suggests that the tail observed is formed during the initial stages of the implantation.[27]

If anomalous diffusion of the implanted ion occurs, then the mathematics of Sec. II applies, i.e., it then applies to regimes (i) and (ii). We do not in this paper treat the distribution in regime (iii), the post-irradiation annealing tail; there are cases where it occurs[23] but it requires distinct mathematics.

II. MODEL FOR TAIL FORMATION

We assume that in the damaged region the interstitials cannot move appreciably because they are trapped by the defects, but in the region beyond the damage region, the interstitials are free to diffuse if mobile. Therefore, the implanted interstitials which come to rest just at the limit between the damaged and the undamaged region will be able to diffuse in the undamaged region and form a tail. In a first approximation we will assume that these interstitials which lie between the maximum depth (x_1) of the defects and the maximum depth (x_2) of the implanted atoms are distributed uniformly, i.e., as a function $\theta(x)$ defined in the following way: $\theta(x)=1$ for $x_1<x<x_2$ and $\theta(x)=0$ for $x>x_2$ and $x<x_1$. Figure 1(c) shows schematically the function $\theta(x)$, together with the distribution of the implanted interstitials and the distribution of the defects created by the implantation.

The problem has planar symmetry. The distribution $\rho(x,t)$ of the diffused implanted interstitials is the solution of the diffusion equation

$$D\frac{\partial^2\rho(x,t)}{\partial x^2}+Q_0\theta(x)=\frac{\partial\rho(x,t)}{\partial t}\quad, \tag{1}$$

with the following boundary conditions:

$$\rho(x<x_0,t)=0;\quad \rho(\infty,t)=0;\quad \rho(x,0)=0. \tag{2}$$

For the sake of generality, the limit of the damage region is taken to be $x<x_0$. Q_0 is the interstitial production rate per unit time; interstitial production is assumed to be uniform over the range $x_1<x<x_2$, during the time of irradiation, t. The solution is

$$\begin{aligned}\rho(x,t)=\tfrac{1}{2}Q_0\{&(1/L^2)[h(x-x_2)(x-x_2)^2-h(x-x_1)(x-x_1)^2]\\&+F(x_1-x)-F(x_2-x)+F(x_2+x-2x_0)\\&-F(x_1+x-2x_0)\},\end{aligned} \tag{3}$$

where L is the diffusion length $(Dt)^{1/2}$ and D is the diffusion coefficient of the implanted interstitials. The functions $h(x)$ and $F(x)$ are defined in the following way:

$$\begin{aligned}h(x)&=0,\quad \text{for } x<0\\&=1,\quad \text{for } x>0\end{aligned} \tag{4}$$

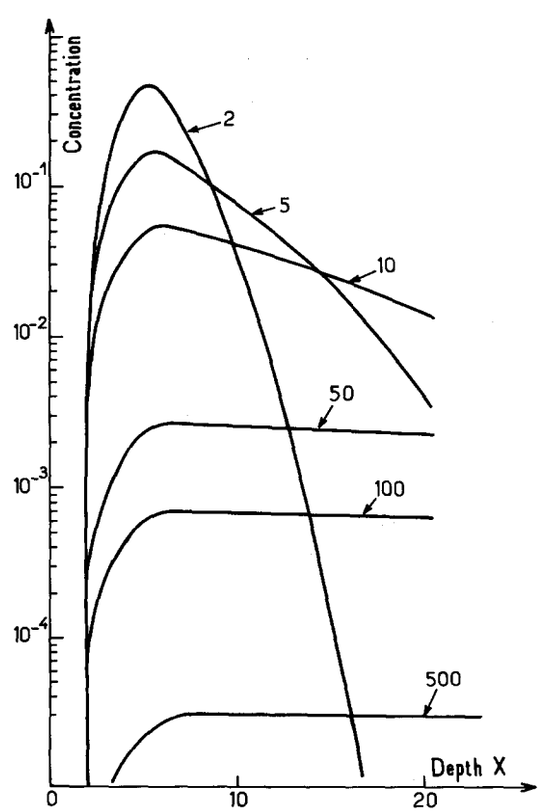

FIG. 2. Implantation profile calculated for the indicated different values of the diffusion length L with $x_0=2$, $x_1=5$, $x_2=6$.

Downloaded 14 Aug 2011 to 129.123.67.59. Redistribution subject to AIP license or copyright; see http://jap.aip.org/about/rights_and_permissions

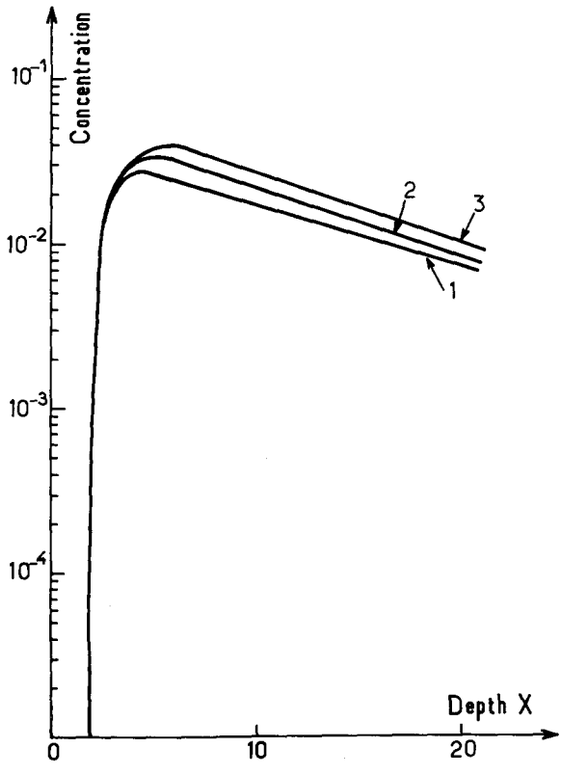

FIG. 3. Implantation profile calculated for different values of $x_2 - x_1$, as marked, with $L = 10$, $x_0 = 2$, $x_1 = 3$.

and

$$F(x) = \left(1 + \frac{x^2}{2L^2}\right)\mathrm{erfc}\left(\frac{x}{2L}\right) - \frac{x}{L\sqrt{\pi}}\exp\left(-\frac{x^2}{4L^2}\right) \quad . \qquad (5)$$

The influence, on the shape of $\rho(x, t)$, of the different parameters, diffusion length L, width of the function $\theta(x_2 - x_1)$, and distance of the function θ from the traps $(x_1 - x_0)$, is illustrated in Fig. 2—4. The diffusion length L changes the slope of the tail; $x_1 - x_0$ changes the position of the maximum; and $x_2 - x_1$ has a small influence on both the position and the amplitude of the maximum. The tail (corresponding to depths large compared to x_2) is an exponential function for a diffusion length large compared to the depth. Such an exponentail tail is often observed for ion implantation in semiconductors. Our results are also capable of fitting nonexponential tails. We illustrate this in Fig. 5, where we fit the data of Davies and Jespergård[12] for Xe implantation in tungsten. The parameters are $x_0 = 1.50$, $x_1 = 3.95$, $x_2 = 4.74$, and $L = 1.58$ (all in units of mg cm^{-2} which are convenient for implantation work). We also show the theoretical fit obtained by Sparks.[11]

III. ANOMALOUS DIFFUSION

In many cases, the tails observed cannot be explained by thermally activated diffusion and authors attribute them to anomalous diffusion mechanisms.[17–19] Although some of these anomalous diffusion phenomena could be due to phenomena similar to radiation-enhanced diffusion,[28] others occur at too low temperatures and no reasonable explanation has previously been found.

A number of atoms apparently diffuse as interstitial atoms and the related parameters are documented. For atoms which normally diffuse substitutionally, i.e., via, say, a vacancy mechanism, little is known concerning their diffusion as interstitials, although radiation damage experiments have yielded some information.[29] If the temperature is too low to allow thermally activated diffusion of the interstitial through an interstitial mechanism, then one has to consider the possibility of diffusion through an athermal mechanism or of the enhancement of the diffusion, as a consequence of the conditions under which the crystal is during the implantation. As we have argued,[22] both enchancement of the diffusion and athermal diffusion (that is diffusion which is not characterized by an activation energy) can be due to ionization effects under conditions such as may occur in an implantation in semiconductors.

During an implantation, a major part of the energy of the implanted atoms is dissipated in electronic collisions, the consequence of which is the creation of electron-hole pairs. The electron-hole pairs which recombine at the interstitial site can induce their migration whether through an energy-released mechanism[22,31] (in which the energy due to electron-hole recombination on the order of 1 eV for germanium and silicon is released in the form of a cascade[32] of phonons), or through the Bourgoin mechanism[21–31] (in which the alternate capture of electrons and holes on the interstitial sites serves to drive the interstitial from one equilibrium configuration in the lattice to another). We estimated[22,31] that the number of jumps experienced by the interstitials, due to an energy-released mechanism, would be on the order of 10 times

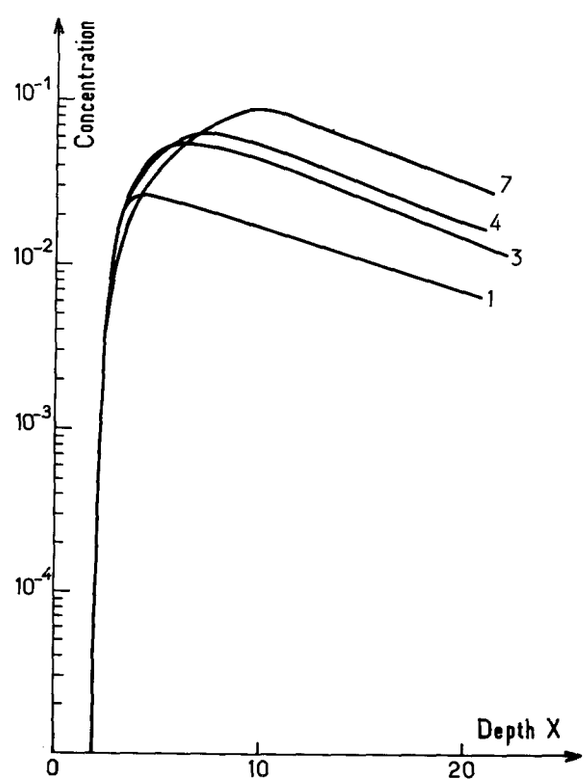

FIG. 4. Implantation profile calculated for different values of $x_1 - x_0$, as marked, with $L = 10$, $x_0 = 2$, $x_2 - x_1 = 1$.

Downloaded 14 Aug 2011 to 129.123.67.59. Redistribution subject to AIP license or copyright; see http://jap.aip.org/about/rights_and_permissions

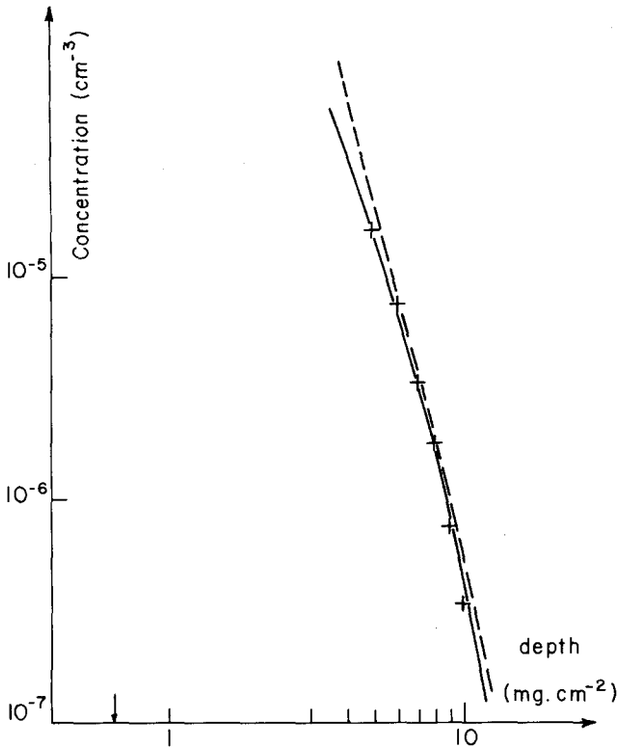

FIG. 5. Comparison of an implantation profile calculated using Eq. (3) (solid line) with a profile calculated by Sparks (Ref. 7) (dashed line) and with the experimental results (+) of Davies and Jespergård (Ref. 12).

smaller than the number of jumps due to the Bourgoin mechanism when that mechanism is operative.

According to the Bourgoin mechanism, the diffusion length due to an implantation is $L_B = 2a(\gamma t)^{1/2}$, where a is the lattice parameter, t is the time of irradiation, and γ is the frequency of change in the charge state of the interstitial as given by

$$\gamma = [1/\sigma_1^n U_n n + 1/\sigma_2^p U_p p]^{-1} , \tag{6}$$

neglecting the thermal excitation of the carriers and the direct band-to-band recombination; U_n and U_p are the electron and hole velocities, σ_1^n, σ_2^p are the capture cross sections of the electrons and holes on the interstitial, n and p are the electron and hole concentrations, including the nonequilibrium concentrations: $n = n_0 + \Delta n$, $p = p_0 + \Delta p$, n_0, p_0 being the equilibrium concentrations of carriers and Δn, Δp the injected carrier concentrations. In the case of an irradiation, $\Delta n = \Delta p = g\tau$, with τ the lifetime of the minority carriers and g the electron-hole pair generation given by

$$g = (\Delta E/\beta)\phi t^{-1} , \tag{7}$$

with ϕ the irradiation dose, t the time of irradiation, ΔE the energy lost by the incident particles in electronic collisions, and β the energy required to create electron-hole pairs in the irradiated crystal.

Let us consider the simple case of an implantation in which the injected carrier concentration is large compared to the equilibrium concentration. The numerical values of the different parameters entering in Eqs. (6) and (7) are the following: at room temperature,

$$U_p \simeq U_n \simeq 10^7 \text{ cm s}^{-1}, \quad \beta \simeq 3.6 \text{ eV (Ref. 33)}.$$

The cross sections σ_2^p and σ_1^n are strongly dependent on the charge state of the interstitial and are difficult to choose; but, using positive and neutral charge states, as expected, for the interstitials, the following values can be taken:

$$\sigma_1^n \simeq 10^{-12} \text{ cm}^{-2}, \quad \sigma_2^p \simeq 10^{-15} \text{ cm}^{-2}.$$

Then,

$$\gamma = 3 \times 10^{-9} \tau \Delta E \phi t^{-1} .$$

Using reasonable values for the lifetime τ, such calculation gives reasonable values for the diffusion length L_B. As an example, we give in Figs. 6 and 7 a comparison of Seidel's results,[34] taking $\tau = 5$ μs.[35] (This value is chosen in order to fit the calculated and the experimental values corresponding to the 300-keV implantation.) The details of the calculation are given in Table I. The electronic energy loss ΔE, the difference between the incident energy and the energy lost by nuclear collisions, is calculated following Haines and Whitehead.[36] Fig. 6 shows that there is a semiquantitative agreement between the observed and calculated variations of L_B.

IV. DISCUSSION

Because systematic studies of the influence of the various parameters which define an implantation on the behavior of the tail have not been made and because very often the characteristics of the implanted crystal (mainly type and concentration of the dopant and lifetime of minority carriers) are not given by the authors, it is difficult to find in the literature direct evidence of the existence of an ionization-enhanced diffusion (IED) mechanism in implantation studies.

Evidence which supports an IED mechanism is as follows:

(i) The tail is smaller in case of a channeled implantation than in the case of a random implantation, which re-

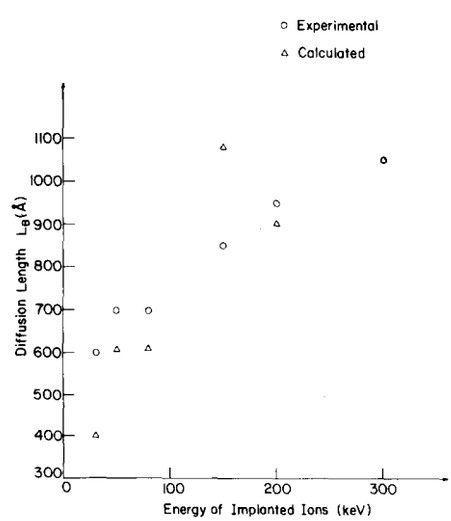

FIG. 6. Comparison between experimental results and our calculation of the variation of the diffusion length L_B with the energy of irradiation.

Downloaded 14 Aug 2011 to 129.123.67.59. Redistribution subject to AIP license or copyright; see http://jap.aip.org/about/rights_and_permissions

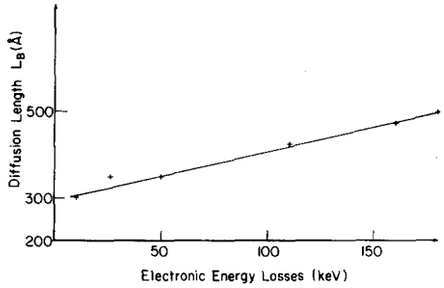

FIG. 7. Diffusion length vs electronic energy losses from Seidel's experimental results.

sults from the lower electronic energy losses in the former case.

(ii) Tails are observed in a wide temperature range (77–800 °K) with apparently little or no effect of the temperature on the concentration of implanted atoms involved in the tail and on the characteristic length of this tail.[37] This argues in favor of an athermal diffusion mechanism. Unfortunately, the measurements of the profiles implanted at low temperature are performed at room temperature, after an annealing. But, at least in some cases[38] (the implantation of group-III atoms in silicon), some of the measurements have been performed at a temperature for which it is known that the implanted interstitial atoms are not mobile[30]; therefore, the diffusion of the interstitial could only have occurred during the implantation. Direct evidence that the tail can develope during the implantation is found in the work of Pavlov *et al.*[39] which shows that the removal of an implanted layer before annealing does not influence the distribution in the region of the tail. (But it is difficult to argue that this is a general case. For instance, Dearnaley *et al.*[23] observed that the extent of the tail in the distribution is substantially reduced by a heavy ion irradiation following the implantation.) The Pavlov *et al.* results imply that the diffusion of the implanted interstitials is induced by the implantation. Since the phenomenon inducing the diffusion can be neither the scattering by incident particles nor a radiation-enhanced diffusion mechanism, it can only be an IED mechanism.

(iii) The importance of the tail, compared to the total implantation profile, seems more pronounced in semiconducting compounds[40–44] than in group-IV semiconductors. This is expected[22] when an IED mechanism is operative because the semiconducting compounds have more ionicity than the group-IV semiconductors.

There is an influence of the energy of the incident atoms on the characteristic length of the tail. Seidel's results[34] (which are the only ones to give a systematic description of the influence of the energy of the implanted atoms on the profile of the tail) show that the characteristic length of the tail is a linear function of the electronic energy losses ΔE. We consider this as a strong indication of the existence of an IED mechanism (the fact that the characteristic length extrapolated to $\Delta E = 0$ is not equal to zero probably means that there is also some thermal diffusion occurring which could be due to the fact that the measurements were made following 850 °C annealing).

TABLE I. Comparison of the theoretical diffusion length L_B with the Seidel results (Ref. 34).

Ion energy (keV)	Ion dose ϕ (cm^{-2})	Experimental length (Å)	Electronic energy loss E (keV)	γt	Calculated L_B (Å)
30	2×10^{12}	6×10^{2}	11	6.6×10^{3}	8.1×10^{2}
50	2×10^{12}	7×10^{2}	26	1.6×10^{4}	1.2×10^{3}
80	1×10^{12}	7×10^{2}	50	1.5×10^{4}	1.2×10^{3}
150	1.5×10^{12}	8.5×10^{2}	110	5×10^{4}	2.2×10^{3}
200	7.2×10^{11}	9.5×10^{2}	160	3.5×10^{4}	1.9×10^{3}
300	8×10^{11}	1×10^{3}	180	4.3×10^{4}	2.1×10^{3}

We feel that other anomalous diffusion phenomena related to ion implantation in semiconductors may find, at least partially, their explanation through an IED mechanism; for instance, the influence of the dose rate on the damage produced by the implantation,[42,44] the migration of metallic impurities evaporated on the surface of the implanted material.[45]

V. CONCLUSION

We have shown that a simple diffusion model can account for the profiles observed in ion-implanted metals and semiconductors. We provided a possible model to account for at least some of the anomalous diffusion observed in semiconductors and we discussed some experimental results which argue for the existence of such a model.

ACKNOWLEDGMENTS

The authors are indebted to B. Crowder and G. Dearnaley for numerous suggestions.

*Research sponsored in part by the Metallurgy and Materials Program of the Division of Research, U.S. Atomic Energy Commission, under Contract No. AT-(11-1)-3478.

†Permanent address: Groupe de Physique des Solides de l'E.N.S., Université Paris VII, Tour 23, 2 place Jussieu, 75221 Paris Cedex 05.

[1]J. Lindhard, M. Scharff, and H. E. Schiøtt, K. Dan. Vidensk. Selsk. Mat.-Fys. Medd. 33, No. 13 (1963).

[2]For a review on this question, see J. W. Mayer, L. Eriksson, and J. A. Davies, *Ion Implantation in Semiconductors* (Academic, New York, 1970), Chap. 2.

[3]For semiconductors, examples can be found in Refs. 4–6. For metals, see Ref. 7.

[4]Proceeding of the Thousand Oaks Conference, Radiat. Eff. **6** (1970); Radiat. Eff. 7 (1971).

[5]*Ion Implantation in Semiconductors*, edited by I. Ruge and J. Graul (Springer-Verlag, Berlin, 1971).

[6]*Ion Implantation in Semiconductors*, edited by S. Namba (Japan Society for Promotion of Science, Tokyo, 1972).

[7]M. Sparks, Phys. Rev. **184**, 416 (1969).

[8]In what follows we take as a measure of the characteristic length of the tail the appropriate diffusion lengths as defined in the text.

[9]G. Dearnaley, in *European Conference on Ion Implantation* (Peter Peregrinus, London, 1970), p. 162.

[10]These explanations include diffusion effects (Refs. 7, 11–13), channelling effects (Ref. 14), or other effects (Refs. 15 and 16).

[11]M. Sparks, Phys. Rev. Lett. **17**, 1247 (1966).

[12]J. A. Davies and P. Jespersgård, Can. J. Phys. **44**, 1631 (1966).

[13]G. Dearnaley, M. A. Wilkins, and P. D. Goode, *Ion Implantation in Semiconductors*, edited by I. Ruge and J. Graul (Springer-Verlag, Berlin, 1972), p. 439.

[14]C. Erginsoy, Phys. Rev. Lett. **12**, 366 (1964).

[15]J. O. McCaldin and J. A. Brinkman, Phys. Lett. **17**, 221 (1965).

Downloaded 14 Aug 2011 to 129.123.67.59. Redistribution subject to AIP license or copyright; see http://jap.aip.org/about/rights_and_permissions

[16]R. E. De Wames, W. F. Hall, and G. W. Lehman, Phys. Rev. **148,** 181 (1966).
[17]D. E. Davies, Appl. Phys. Lett. **13,** 243 (1968).
[18]R. A. Moline, J. Appl. Phys. **42,** 3553 (1971).
[19]T. Itoh, T. Inada, and K. Kanekawa, Appl. Phys. Lett. **12,** 244 (1968).
[20]R. Kelly and L. Q. Nghi, Radiat. Eff. **6,** 247 (1970).
[21]J. Bourgoin and J. W. Corbett, Phys. Lett. A **38,** 135 (1972).
[22]J. Bourgoin, J. W. Corbett, and H. L. Frisch (unpublished).
[23]G. Dearnaley, M. A. Wilkins, P. D. Goode, J. H. Freeman, and G. A. Gard, *Atomic Collision Phenomena in Solids*, edited by D. W. Palmer, M. W. Thompson, and P. D. Townsend (North-Holland, Amsterdam, 1970), p. 633.
[24]J. F. Gibbons, A. El-Hoshy, K. E. Manchester, and F. L. Vogel, Appl. Phys. Lett. **8,** 46 (1966).
[25]J. A. Davies, L. Eriksson, and J. L. Whitton, Can. J. Phys. **46,** 573 (1968).
[26]K. E. Manchester, J. Electrochem. Soc. **115,** 656 (1968).
[27]B. Crowder and G. Dearnaley (private communications).
[28]Radiation-enhanced diffusion is the enhancement of the diffusion of an impurity because of the mobility of irradiation-induced defects. The enhancement of the diffusion due to the presence of vacancies cannot apply in the present case, since we are dealing with the migration of interstitials. In addition, for room-temperature implantations, the irradiation could not enhance the diffusion of substitutional implanted atoms — assuming their existence — because the irradiation dose is too small and the temperature too low to permit the process to occur.
[29]The properties of group-III interstitial atoms are known from the work of Watkins (Ref. 30): for instance, aluminum interstitial anneals at 250 °C.
[30]G. D. Watkins, *Symposium on Radiation Effects on Semiconductor Components*, edited by F. Cambou (Journées d'Electronique, Toulouse, 1968), Paper A1.
[31]J. W. Corbett, J. C. Bourgoin, and C. Weigel, *Proceedings of the 1972 Radiation Effects in Semiconductors Conference, Reading* (Institute of Physics, London, 1973), p. 1.
[32]M. Lax, Phys. Rev. **119,** 1502 (1960).
[33]C. Canalli, M. Martini, G. Ottoviani, and A. Alberigi Guaranta, IEEE Trans. Nucl. Sci. **19,** 9 (1972); C. L. Anderson and C. R. Crowell, Phys. Rev. B **5,** 2267 (1972).
[34]T. E. Seidel, *Ion Implantation in Semiconductors*, edited by I. Ruge and J. Graul (Springer-Verlag, Berlin 1972), p. 47.
[35]Because of the damage introduced in the implanted material, the lifetime decreases continuously during the implantation; therefore, the lifetime to be considered is a lifetime "averaged" over the whole implantation rather than the initial lifetime of the implanted material.
[36]E. L. Haines and A. B. Whitehead, Rev. Sci. Instrum. **37,** 190 (1966).
[37]R. Gamo, M. Iwaki, K. Masuda, and S. Namba, in Ref. 5, p. 459.
[38]W. J. Kleinfelder, W. S. Johnson, and J. F. Gibbons, Can. J. Phys. **46,** 597 (1968).
[39]P. V. Pavlov, E. I. Zorin, D. I. Tetel'baum, A. S. Baranova, and V. K. Vasil'ev, Radiat. Eff. **13,** 153 (1972).
[40]T. Itoh and Y. Kuskiro, in Ref. 5, p. 168.
[41]M. A. Wilkins and G. Dearnaley, in *Proceedings of the Conference on Ion Implantation, Reading, 1970* (Peter Peregrinus, Stevenage, England, 1970), p. 193.
[42]G. Eldridge, P. K. Govind, D. A. Nieman, and F. Chernow, in Ref. 41, p. 143.
[43]J. S. Harries, in Ref. 5, p. 157.
[44]N. G. Blamires, in Ref. 5, p. 119.
[45]D. H. Lee, D. J. Marsh, and R. R. Hart, in Ref. 5, p. 262.

Downloaded 14 Aug 2011 to 129.123.67.59. Redistribution subject to AIP license or copyright; see http://jap.aip.org/about/rights_and_permissions