A Propulsion System Tailored to Cubesat Applications

Donald Platt
Micro Aerospace Solutions, Inc.
2280 Pineapple Ave; 321-243-4633
dplatt@micro-a.net

ABSTRACT

Cubesats and other nano- and pico-satellite platforms have traditionally not had the capability of on-board propulsion. A complete propulsion system tailored to cubesat and other nano-picosat applications is presented in this paper. This system has been demonstrated and is ready for use in cubesat missions. A diaphragm positive expulsion tank or integral structure/bladder tank has been developed for propellant storage and feed to the thrusters. Propellant systems available include hydrogen peroxide, hydrazine or cold gas. Available thrust levels range from 5 to 100 milliNewtons. Power requirements are 0.5 watts and the voltage requirement is 12 volts.

INTRODUCTION

There is a need to provide propulsion system options for Cubesat spacecraft. University teams around the world are building nanosatellites that meet the Cubesat specifications defined by Cal Poly University.[1] These specifications are for a satellite 10 cm on a side (the shape of a cube) and a total system mass of 1 kilogram. Storck and colleagues described very basic needs and options for a micropropulsion module for these spacecraft.[2]

DESIGN OBJECTIVES

The objectives of the microthruster design presented in this report are to provide a thruster capable of producing thrust in the range of 50 to 100 milli-Newtons using relatively safe hydrogen peroxide propellant. A solenoid valve capable of pulsing and metering propellant for the smallest possible impulse bit maneuvers is also required. Also the tank, capable of being used in a microgravity environment and associated filters and feed system must be capable of fitting within the dimensions of a standard cubesat with room left over for payload, electronics, batteries and other hardware. Other propellants have also been demonstrated with this system.

Due to the small size of the nozzle, boundary layer effects are important. The nozzle divergence angle has been optimized to produce the maximum axial thrust while limiting the boundary layer and non-axial thrust losses.

The thruster should be capable of providing pulse-mode operation to allow minimum impulse bits on the order of $1x10^{-4}$ N-s and allow for a lifetime of at least 250,000 pulses, which assuming one pulse every 30 seconds, would allow for a mission lifetime of 90 days. For a 1 kilogram cubesat, the most probable limiting factor for lifetime will most likely be the small volume of propellant such a small spacecraft can carry on-board. It would also be desirable to minimize the mass of this thruster and valve assembly to 5 grams or less.

The chamber and the catalyst need to be able to withstand hydrogen peroxide decomposition temperatures of as much as 750 degrees C. To allow for minimal impulse bits, the thruster valve should be able to operate in a pulse mode with a duty cycle of 50% on time and 50% off. The minimum pulse time should be 1 millisecond.

The valve also has to be compatible with rocket propulsion grade hydrogen peroxide (90% hydrogen peroxide, 10% water). Since nanosatellites are typically power limited, the valve should consume as little electrical power as necessary. The minimal amount of power used by valves with the pulse specifications defined above was found to be 0.5 watts. Also, large voltage buses are not generally available on nanosatellites so 12 volt valves are desirable.

A propellant delivery system is also required for the thruster system along with a manifold and filtration system to keep particulates from clogging the valve or injector. For the microgravity environment of space a tank with a positive expulsion device is required to force the propellant towards the outlet.[3]

The design of this microthruster system includes a tank with an elastomeric viton diaphragm that separates the

propellant and the gas used to expel the propellant. This diaphragm also keeps the propellant from mixing with the gas pressurant and keeps gas bubbles out of the propellant.

EXAMPLE DESIGN

To illustrate the capability of the micropropulsion system to provide a propulsive option for cubesat missions, a design was developed. This system is comprised of a pressurant fill valve, positive expulsion tank 5 cm (2 inches) in diameter, filter and 4 solenoid valve and microthruster sets. The system is diagramed in Figure 1. For simplicity this design uses 4 thrusters but it can be extended to more thrusters if needed.

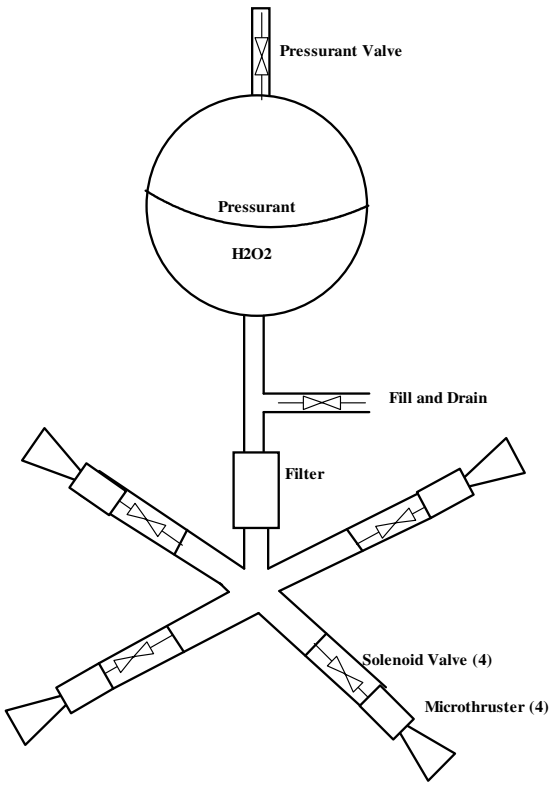

Figure 1: Cubesat Propulsion System Diagram, Extendable to More Thrusters.

The design was then developed into actual hardware by Micro Aerospace Solutions in support of a student cubesat design project at the Florida Institute of Technology. A series of 3-D models were developed to show the components of the system. Figure 2 shows the mount for the 2-inch positive expulsion tank. This figure also shows the 4 solenoid valves from The Lee Company used in the system to control propellant flow to the microthrusters.

Figure 3 then shows thrusters mounted on the under side of the bottom plate of the spacecraft. The arrangement is such that 2-axis control of the cubesat is provided. Teflon feed lines using Lee Company minstac fittings connected the tank and valves.

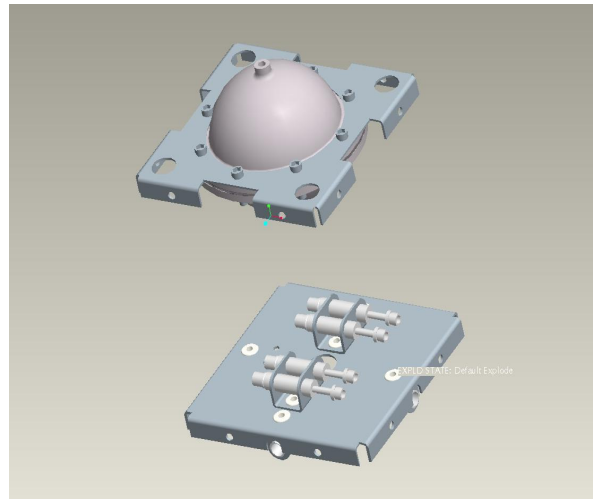

Figure 2: Cubesat Propulsion Module Showing 2-inch Diameter Tank and 4 Solenoid Valves.

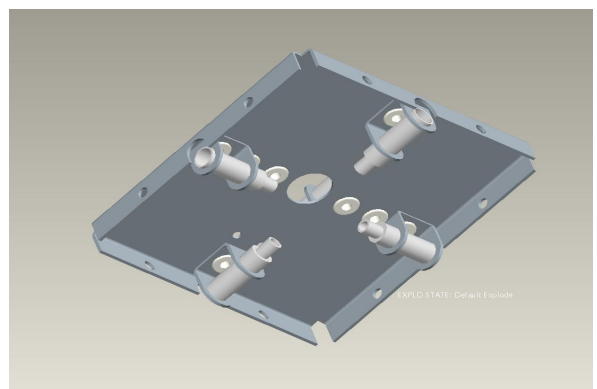

Figure 3: Propulsion Module Bottom Plate with 4 Microthrusters.

The components were designed to provide modularity so that the module could be placed as a complete unit inside of a cubesat or larger small satellite.

Micro Aerospace Solutions has also developed the control electronics for the propulsion module to allow control pulsing of the valves. The board capable of controlling 4 microthrusters measures about 1.5 inches by 1.3 inches.

Figure 4 demonstrates the electronics board mounting as well as placement of other electronics in the cubesat system. Thus there is room for the electronics and other components required for a cubesat mission as well as the propulsion module. In the figure the

electronics boards are modeled as the dark rectangles. See Figure 5 for the complete 3-D model of the cubesat with 4 microthrusters on the bottom surface of the spacecraft.

Table 1 provides a summary of the cubesat propulsion module mass. The total wet system mass is about 144 grams.

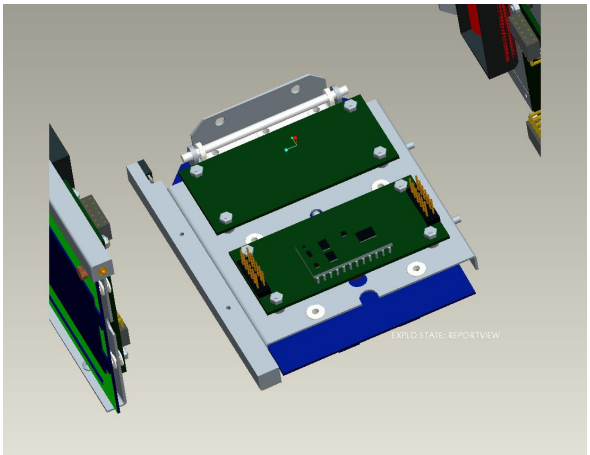

Figure 4: Propulsion Module Provides Space for the Required Electronics and Payload for a Cubesat Mission.

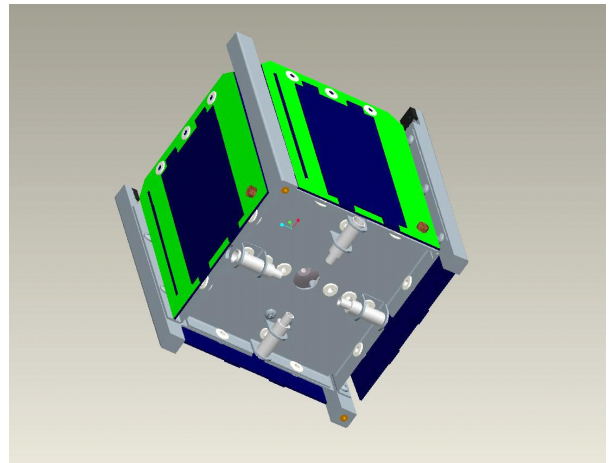

Figure 5: Assembled Cubesat Model Showing Thruster Location.

Table 1: Cubesat Propulsion Module Mass Summary.

Part	Material	Density (gm/cm^3)	Volume(cm^3)	Unit Mass (gms)	Qty:	Mass(gm)
Tank(2.54 cm radius)	Aluminum 6061-T6	2.685	7.79		1	20.92
Fuel	H2O2@90%	1.4	60.85		1	85.19
Thruster w/ valve	Aluminum 6061-T6	2.685		4.9	4	19.60
4-way Hypodermic tubing Conn	SS	7.85	0.15		1	1.18
Tubing ID .045 (10 ')	Teflon	60.62	0.07		4	16.97
					Total:	143.87

The microthrusters used for testing were machined from brass with throat diameters of around 0.020 inches. Nozzle divergence angles are 30 degrees and expansion ratio is 35. Isentropic flow approximations would suggest a thrust level of about 100 mN for this size throat using hydrogen peroxide and assuming a specific impulse of 140 seconds. Accounting for ambient pressure losses as well as viscous losses and other inefficiencies, thrust would be expected to be around 50 mN. A silver gauze mesh catalyst has been developed specifically for microthruster applications by Micro Aerospace Solutions. See Figure 6 for the microthruster diagram.

The prototype propulsion module was built from these models to fit the cubesat standard dimensions. This system demonstrated the propulsion system and was used to fit check other components. Hot firings were conducted with all four thrusters in this configuration. The valves were controllable from a standard 9 volt battery although a 12 volt bus is recommended for operation. It is shown in Figure 7.

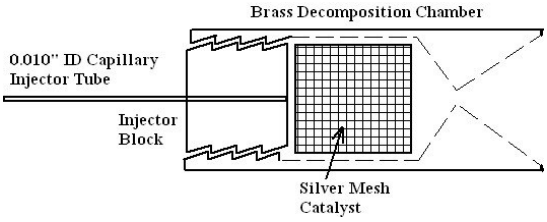

Figure 6: Microthruster Diagram Showing Injector and Silver Mesh Catalyst.

Figure 7: A Prototype Cubesat Propulsion Module Used for Thruster Hot Fire Tests.

THRUSTER TESTS

To determine steady state thrust levels and mass flow rates for the microthruster, a system was developed to feed hydrogen peroxide into the thruster by means of either an eyedropper or a 1 cc syringe.

To meter propellant into the catalyst chamber, a 0.010-inch inside diameter stainless steel capillary tube was used as the injector. It was bent into a 90 degree elbow to allow the microthruster to be positioned vertically. A load cell was attached to the microthruster by a leverage arm. The test configuration is shown in Figure 8.

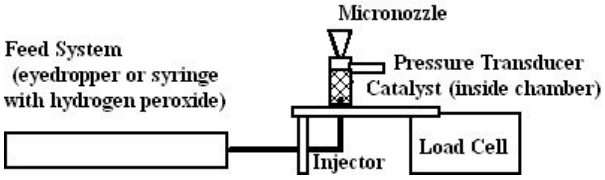

Figure 8: Steady State Thrust Measurement Configuration.

Test data is shown in Figure 9. This shows some variability in thrust operating in this steady state mode with a syringe feed system. Actual system operation is in short pulse mode. Pressure pulses through the nozzle were noted in this mode indicative of some combustion instability.

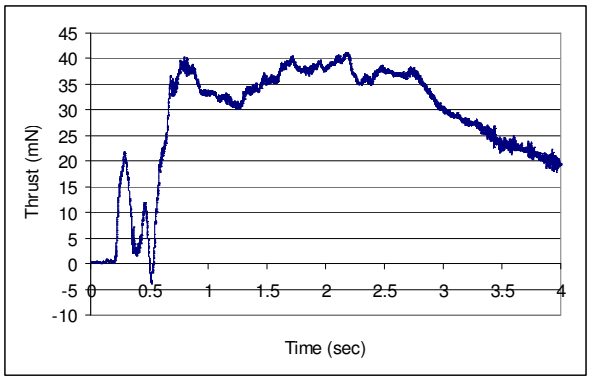

Figure 9: Steady State Microthruster Thrust Measurement Using 85% HTP.

MICROTHRUSTER CHAMBER TEMPERATURE MEASUREMENTS

Microthruster chamber temperature measurements were conducted at various mass flow rates to determine the

efficiency of the catalyst over a range of mass flow rates at steady state operation. Temperature measurements were conducted with a type-K thermocouple probe connected to a thermocouple signal conditioner. The thermocouple was a Cole-Parmer (www.coleparmer.com) EW-08419-02 with a diameter of 0.254 mm (0.010"). This thermocouple has a time constant 0.15 seconds and a 0.8 second response time. The smallest diameter thermocouple available was chosen since this probe has the shortest response time.

The decomposition temperature of hydrogen peroxide at various concentrations is plotted in Figure 10.[4] The temperature measurements in the chamber at the catalyst material can then be compared to this chart to approximate the decomposition efficiency of the microthruster gauze catalyst.

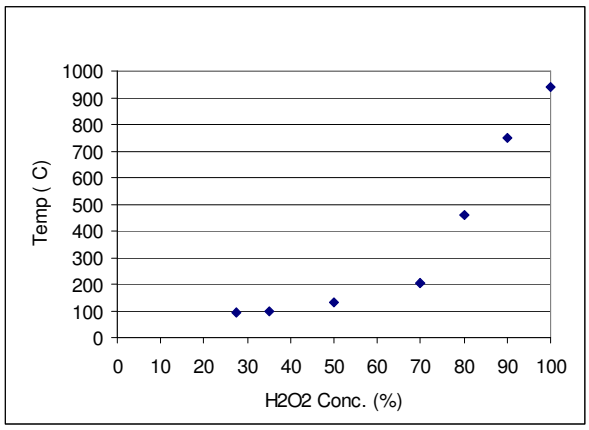

Figure 10: Decomposition Vapor Temperature for Various Concentrations of Hydrogen Peroxide [after Ref 4].

Temperature measurements were made for various mass flow rates through the chamber. The mass flow rate was determined by timing how long it took to feed 1 cc of hydrogen peroxide by way of a syringe through the microthruster. The density of the hydrogen peroxide was determined by massing a known volume. Concentration of hydrogen peroxide was also determined since the density variation with concentration is well known.[4] See Figure 11 for the variation.

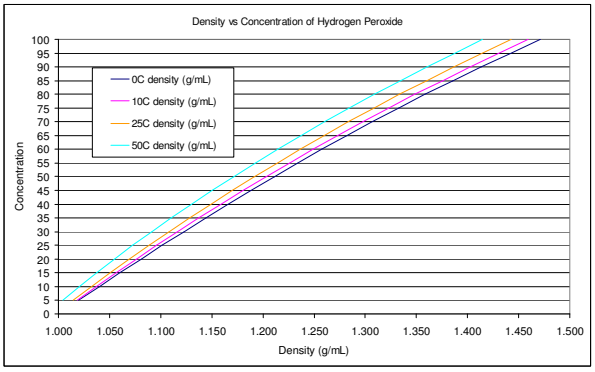

Figure 11: Hydrogen peroxide Density-Concentration for Various Temperatures [Ref 4].

Temperature measurements were made over time as hydrogen peroxide was fed into the microthruster at various mass flow rates. The k-type thermocouple described previously was placed in a threaded mount through a hole in the side of the chamber wall. The first set of temperature measurements were conducted simply by noting the temperature on a digital thermocouple thermometer at various times after initiation of flow. The temperature was plotted for the various mass flow rates from 6.5 x 10^{-6} kg/sec to 3.89 x10^{-5} kg/sec, see Figures 12. It can be seen that there is a warm up time required for the catalyst before maximum decomposition temperature is achieved, typically 10 to 15 seconds. From Figure 10, 85% hydrogen peroxide has a decomposition temperature of approximately 600 degrees K. The temperature data collected indicates that the catalyst length and mass used for this test is optimized for a mass flow rate of 2.43 x10^{-5} kg/sec. as this flow rate produced the highest catalyst temperature after 60 seconds of run time. Scharlemann et al reported a similar ramp up in temperature reaching a maximum after approximately 30 to 40 seconds for mullite and mullite-zirconia catalysts using 87.5% hydrogen peroxide.[5] Also noted is a variation in temperature with time as what is likely a quenching phenomenon is noted in the catalyst system.

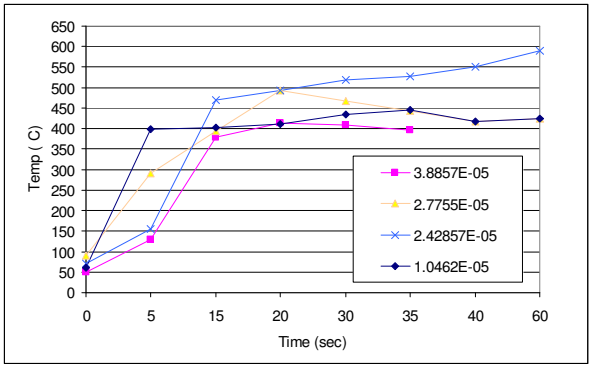

Figure 12: Temperature vs Time for Higher Mass Flow Rates, Showing a Maximum Temperature for 2.43 x10-5 kg/sec.

It was desired to achieve more resolution in the temperature measurements, especially as the microthruster initiates decomposition. For this, a series of tests were conducted with the thermocouple connected to a computer-based data acquisition system and data was collected with software developed by the author. With this experimental setup, 1,000 temperature measurements per second were collected. Again a series of measurements were made at various mass flow rates and the data are shown in Figure 13. These data show a quick increase from room temperature to over 50 degrees C within 1 second of initiation. Then the temperature increases rather slowly until the boiling point of water is achieved by the catalyst and at this point, around 11 to 13 seconds after initiation, the temperature increases much more quickly.

A comparison of catalyst temperature was also made for two widely separate starting temperatures. For the same mass flow rate (1.43×10^{-5} kg/sec), one run was made with an initial temperature of 20 degrees C and a second with an initial temperature of 60 degrees C and the results are in Figure 14. The run which started at 60 degrees C quickly ramped up to over 300 degrees C. Also evident is the sharp increase in temperature once 100 degrees C was attained and the water in the 85% hydrogen peroxide was then able to be immediately vaporized. These results show the importance of maintaining a high operating temperature between firings of the thruster. This is especially important since on-board the spacecraft the thrusters will generally be operating sporadically in pulse mode. Temperature can be maintained with small resistive heaters which can be wrapped around the outside of the chamber. The heaters can then be turned off when the thrusters are operating to minimize the maximum power draw of the system.

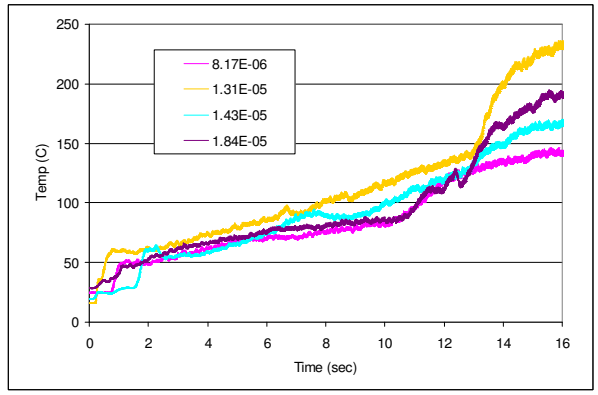

Figure 13: Chamber Temperature During Startup of Microthruster for Various Mass Flow Rates (in units of kg/sec).

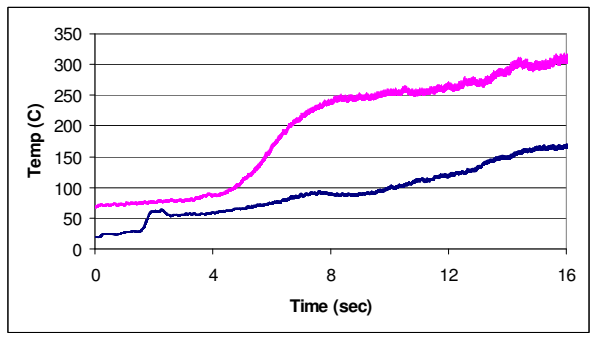

Figure 14: The Catalyst Temperature Increases More Quickly for a Start Temperature of 60 degrees C (pink) Compared to 20 degrees C (black) for the Same Mass Flow Rate.

PULSE MODE THRUST MEASUREMENTS

Pulse mode thrust measurements were taken using both hydrogen peroxide and tridyne (a mixture of nitrogen, oxygen and hydrogen). Thruster demonstration tests have also been conducted with hydrazine. The tridyne and hydrazine tests were conducted with a platinum-iridium catalyst in an arrangement different from the silver gauze catalyst hydrogen peroxide tests. Also Micro Aerospace Solutions is studying the use of AND propellant in a microthruster which would have higher performance than hydrazine but be non-toxic and relatively safe. This work is in conjunction with the Swedish Space Corporation.

A series of different thrust stands were developed and tested for measuring thrust in the mill-Newton range. An example test setup is shown in Figure 15. Other

setups included one with a frictionless bearing beam arrangement described by Scharlemann, et. al which also was tested.[5]

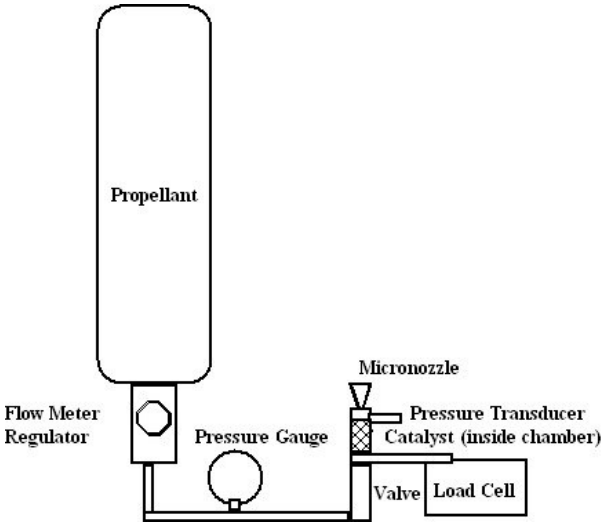

Figure 15: Pulse Mode Thrust Measurement System.

Figure 16 shows data from tridyne thrust measurement tests. Operating pressure was 50 psi and each pulse was 9 milliseconds long with a 50% duty cycle. This shows an excellent reducibility between pulses with the gaseous propellant and catalyst. Peak thrust is about 15 mN with this propellant configuration.

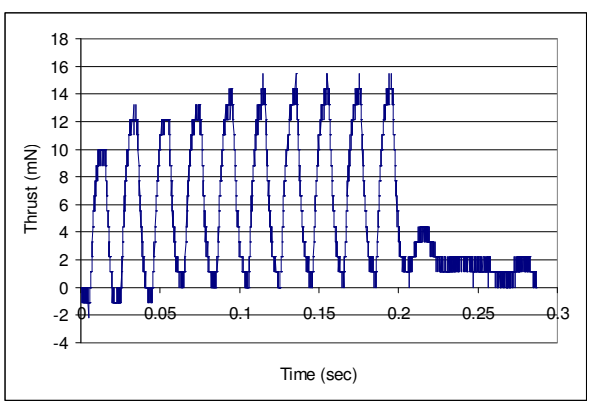

Figure 16: Tridyne Microhtuster Tests with 50 psi Pressure and 9 Millisecond Pulses.

Hydrogen peroxide thruster pulse tests were then conducted with various valve on times. Thruster throat diameter was 0.018 inches for these tests. A force beam thrust measurement system similar to the described by Scharlemann, et. al was built for these tests. Data collection rate was 15 KHz. Feed pressure was 50 psi. Figure 17 shows a thrust measurement for a pulse that lasted 2 milliseconds. The average thrust is approximately 10 mN and duration was 10 milliseconds. The resulting impulse bit is approximately 1×10^{-4} N-s.

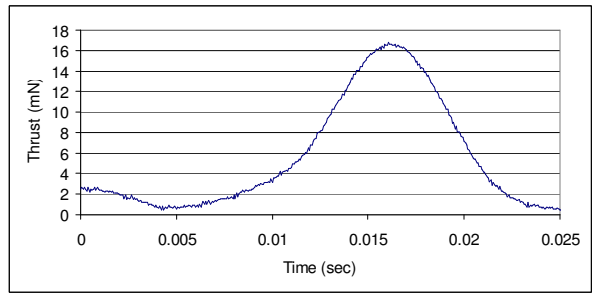

Figure 17: Hydrogen Peroxide 2 Millisecond Duration Pulse (Valve On-time).

A series of thruster pulses were then captured. In Figure 18 three sets of 1 millisecond pulses are captured. The vibration signature of the valve actuation is observed at the start of each pulse. Also some oscillation in the force beam can be observed between pulses (negative thrust).

With the pulse length variability, the amount of thrust from the thrusters can be varied. Figure 19 shows three sets of pulses with an on-time of 800 microseconds. This allows a certain level of "throttleability" for the system.

These measurements indicate some variability in thrust between separate pulses but overall the ability to operate the microthruster at various thrust levels. Due to the hydrogen peroxide decomposition variability and dwell time in the chamber required for complete decomposition some variability is unavoidable. The advantages of using a liquid monoprop such as hydrogen peroxide over gaseous systems such as cold gas and tridyne are an increase in specific impulse and lower tank masses and leak rates.

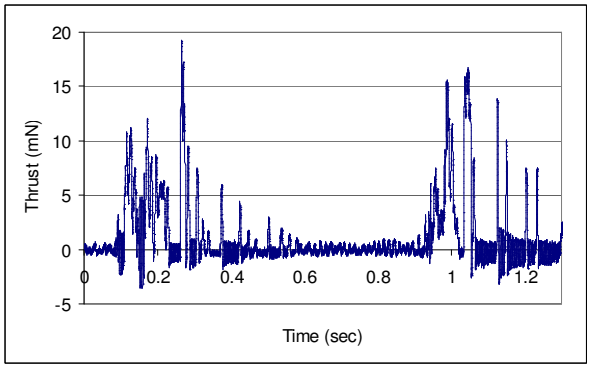

Figure 18: 1 Millisecond Pulse Sets With Hydrogen Peroxide Thruster.

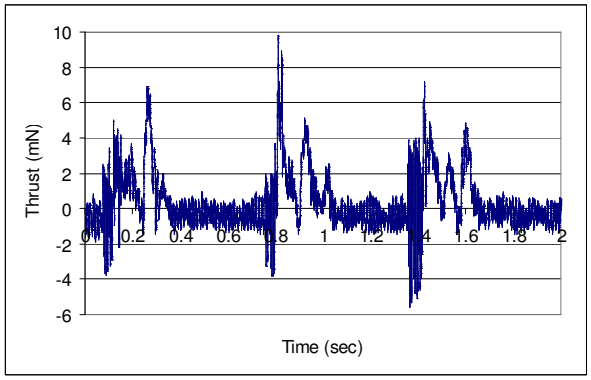

Figure 19: 800 Microsecond Pulse Thrust Measurements.

AN ADVANCED TANK CONCEPT

A traditional problem with any nano- or pico-satellite design is to find enough room for all required components, subsystems and the payload. Volume must be optimized and used to the maximum that is possible or at least practical. Spherical pressure vessels do not make the most practical use of space in a cubesat. Due to this we have been looking at alternatives for propellant tanks that maximize volume usage and are practical for cubesat applications.

One area of design interest that cubesat users need to be looking at is making maximum use of structural elements and making components and elements multi-use.

Rossoni and Panetta[7] suggested that nano-satellite builders look at the use of Multi-Functional Structures (MFS). In MFS systems, subsystem components are integrated or embedded into the structural elements. It was suggested that batteries, power and data wires as well as propellant system components be integrated into the structure.

We have looked at how a propulsion system could be integrated into the structure of a cubesat. A system concept is shown in Figure 20. In this design concept the structural wall could be made from aluminum and machined into the middle of the face would be a circular pressurized area. A propellant bladder could then be placed inside this circular area. Then the bladder could feed a series of valve/microthruster sets. The thruster could be positioned so that it exhausts through the front face of the structural element. Two or even four thrusters could be configured as part of the wall. Then a backing plate could be attached to the structural member with a seal to maintain pressure in the circular pressurized section.

This Multi-Functional Structure would provide a complete propulsion module on each wall of the cubesat. It would offer a pressurized section with a positive expulsion bladder. The bladder could be made of viton or Teflon to assure long term compatibility with the propellant which would help with storage concerns for propellants such as hydrogen peroxide. A 2-inch bladder would allow provide for about 12 mL of propellant. Such a structural element would be approximately ½-inch thick, providing for around 2.75 inches internal space.

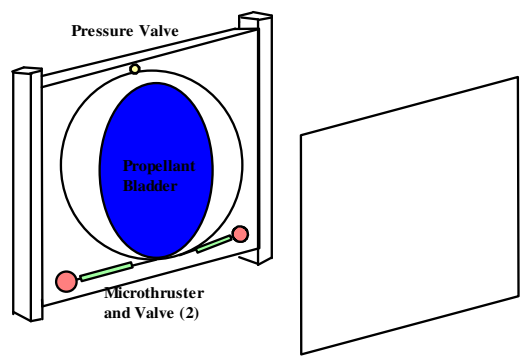

Figure 20: Sandwich Propellant Tank Structural Element Concept

CONCLUSION

A propulsion system option for cubesats has been developed and tested. A system with a positive expulsion tank for microgravity operations has been created and tested with hydrogen peroxide as a

propellant. System tests have also been conducted with tridyne and hydrazine. Cold gas propellant could also be an option. The entire system fits within the cubesat standard dimensions with room for electronics and payload. Power requirements are within those available for cubesats and voltage requirements are 12 volts. An advanced propellant tank sandwich structural element has also been proposed.

Acknowledgments

The author would like to thank the Florida Institute of Technology FUNSAT cubesat student design teams of the last three years which the author has been advisor. Specific student assistance has been supplied for this project by Robert Morrison, Thilina Fernando, Jeremy Weber, Ben Holohan, and Justin Treptow. The author would like to also acknowledge the technical support of Dr Paavo Sepri of the Florida Institute of Technology.

References

1. Cubesat standard web page, Cal Poly, http://cubesat.atl.calpoly.edu/pages/documents.php, accessed, May 24, 2007.
2. Storck, W., Billett, O., Cutler, J., Jambusaria, M., Sadhwani, A., and Jammes, P., "A Survey of Micropropulsion for Small Satellites", 20th Annual AIAA/USU Conference on Small Satellites, 2006, SSC06-VIII-3.
3. Sutton, G. P., Biblarz, O., Rocket Propulsion Elements. John Wiley and Sons, New York, N.Y., 7th edition, 2001.
4. Schumb, W.C., Charles N. Satterfield, C.N., and Ralph L. Wentworth, R.L., Hydrogen Peroxide, Reinhold Publishing Corporation, 1955.
5. Scharlemann, C., Schiebl, M., Marhold, K., Tajmar, M, Miotti, P., Kappenstein, C, Batonneau, Y., Brahmi, R., and Hunter, C., "Development and test of a Miniature Hydrogen Peroxide Monopropellant Thruster", 2006, 42nd Joint Propulsion Conference and Exhibit, AIAA 2006-4550.
6. Schumb, W.C., Charles N. Satterfield, C.N., and Ralph L. Wentworth, R.L., Hydrogen Peroxide, Reinhold Publishing Corporation, 1955.
7. Rossoni, P., and Panetta, P., "Developments in Nano-Satellite Structural Subsystem Design at NASA-GSFC", 13th AIAA/USU Conference on Small Satellites, 1999, SSC-99-V-3.