The Future of the Microsatellite Program in Canada

Simon Grocott
Dynacon Inc
3565 Nashua Drive, Mississauga, ON, Canada L4V 1R1; (905) 672-8828
scog@dynacon.ca

ABSTRACT: The Canadian Space Agency (CSA) began an initiative to develop a microsatellite bus for generic application with the release of an RFP in August 2004. Phase A for this program is now completed and demonstrates, a multimission adaptable satellite bus that will be capable of satisfying at least three particular missions. The Near Earth Object Surveillance Satellite (NEOSSat), a joint CSA-DRDC (Defense Research and Development Canada) program, is scheduled as the first mission to be launched nominally in the first quarter of 2008. The second mission is nominally expected to launch two years later, in 2010, and will contain a radar altimeter payload whose objective is to measure the height of waves in the oceans. The third mission is expected to launch another two years later, in 2012, and is expected to be a technology demonstration mission to provide a dedicated satellite to space qualify advanced newly developed technology. The design for a microsatellite bus to satisfy the requirements for all three missions is presented. The design centers on a set of modular avionics that can be used as required for the various missions, housed in a set of aluminum trays that form a tray stack as the primary structure of the satellite.

INTRODUCTION

Early in 2003, the Canadian Space Agency began its Smallsat/Microsat program with a series of studies on how to develop a generic small satellite (<250kg) bus and a generic microsatellite (<75kg) bus. Phase A/B for the smallsat program began in 2004 with the development of the generic small satellite bus and its first mission the Cassiope mission. Phase A for the microsatellite bus began in January 2005.

The small and microsatellite program is to launch a new satellite (either small or microsatellite) each year beginning in 2007-2008 with nominal plans for at least 3 small satellites and 3 microsatellites up to 2012. The objective of the program is to bring an extremely low-cost access to space for Canadian scientific payloads.

The focus of this paper is the development of the microsatellite bus for which Dynacon received the phase A contract in January 2005.

MULTIMISSION REQUIREMENTS

The multimission microsatellite bus is a 75kg class spacecraft to be designed to a minimum 1 year life with a goal of 2 years.

The first micro-satellite bus will support a joint CSA/DRDC mission called NEOSSat (Near Earth Orbit Surveillance Satellite). NEOSSat will use a small aperture optical telecope to search for and track both Near Earth Asteroids and Earth-orbiting satellites and debris[1].

Following this first mission it is expected that the microsatellite bus will be used by the CSA and other Canadian government organizations to provide rapid low-cost access to space to science and technology demonstrations.

For the purposes of the Phase A work, two other candidate missions were considered. The contains a Radar Altimeter payload and the second a yet-to be determined technology demonstration payload.

The key requirements for these three missions are shown in Table 1. The payloads have a considerable range of volumne shape, mass and power consumption. They also exhibit the requirement for substantially different attitude control modes. The required downlink data rate varies from mission to mission but is similar in scale for each mission as is the volume of data storage required. Finally, a key requirement is that the bus be compatible with a multitude of launch vehicles so that launch opportunities are not overly restricted.

Parameter	NEOSSat	Radar Altimeter	Technology Demonstration
Mass	19.3 kg (TBC)	25 kg	30 kg
Volume	900 x 250 x 250 mm	400 x 400 x 230 mm	TBD
Power Average / Peak	11 W / 11 W	32 W / 55 W	30 W / 60 W
Payload Voltage	28 ± 6 V	28 ± 6 V	28 ± 6 V
Orbit	630 to 700 km altitude, sun-synchronous, dawn-dusk	500 to 800 km altitude, 70° inclination, circular	600 to 850 km altitude, sun-synchronous
Attitude Stability Mode	3-axis inertial stabilized	nadir pointing	nadir pointing
Attitude Pointing Control	72 arcsecond (NESS), 300 arcseconds (HEOSS)	1° with respect to nadir	1° with respect to roll, pitch, and yaw
Attitude Pointing Stability	0.5 arcsec	TBD	TBD
Downlink Data Rate	2 Mbps, S-Band	1 Mbps, S-Band	1.5 Mbps, S-Band
Uplink Data Rate	4 kbps, S-Band	4 kbps, S-Band	4 kbps, S-Band
On-Board Data Storage	1GB	128 MB	256 MB
Launch Vehicle	Compatible with multiple launch vehicles (DNEPR, Rockot, Taurus etc)		

Table 1 Multimission satellite requirements (adapted from Reference 1)

DESIGN APPROACH

The spacecraft electronic architecture is shown in Figure 1. At the center of the spacecraft electronic is the Control and Data Handling (C&DH) computer. The C&DH computer processes all spacecraft commands which are executed either in real-time or as time-tagged commands; communicates with the power system, GPS and Attitude Determination and Control Systems (ADCS); implements the CCSDS communication protocol; collects spacecraft telemetry; stores all payload data; and controls the download of all data to the ground.

This is connected via 4-wire RS-485 to the ADCS MicroNode which interfaces with all attitude actuators and sensors, and runs the attitudte control software. This bus allows the C&DH to send commands and receive telemetry from the ADCS MicroNode unit. The C&DH is also connected to a GPS unit via an RS-232 connection, allowing it to receive telemetry from the GPS unit as well as to send commands.

The Telemetry Tracking and Command (TT&C) Nodes; which provide modulation and demodulation, scrambling and descrambling power regulation for transmitter and receiver and basic telemetry capability; and the power control and distribution unit, which controls the conversion of power from solar arrays, regulates battery charge, manages all spacecraft power switches, and provides power telemetry are connected to the C&DH via an SPI (serial peripheral interface) bus interface implemented over an RS-485 physical layer. The SPI interface is a low-level interface common on electronics components for the control of peripheral devices. This bus allows the C&DH to send low-level commands and receive low level telemetry from the TT&C Node and the Power Control and Distribution Unit (PCDU). These units are the primary source for spacecraft hardware telemetry. The PCDU provides measurements of the bus voltage as well as the current and state of every power switch. In addition it provides telemetry on the solar panel voltage and

current as well as battery temperature voltage and current. All this information is exchanged over the SPI bus.

A pyro activation line from the PCDU is connected to the payload to activate any deployables after launch vehicle separation. As well, the PCDU includes a MOST-heritage circuit for commanding the payload instrument door closed if the sunlight approaches the boresight of the instrument. This is based on the assumption that the instrument will suffer immediate and permanent damage if the Sun enters the field of view of the instrument A sun sensor connected to the PCDU will indicate when the door should be closed.

The TT&C Node similarly provides telemetry on spacecraft temperatures over the SPI interface. Power switches are commanded over the SPI interface with the exception of transmitter control. The transmitters are switched by direct connection GPIO lines from the C&DH to the PCDU. Similarly, the Push To Talk (PTT) functionality that sends data from the transmitter following power up is controlled via GPIO to the TT&C Node. The received and transmitted data streams are exchanged between the C&DH and the TT&C Node over an RS-485 physical layer interface that connects these units. Finally, the C&DH provides direct RS-422 connections to the payload, which include a nominal data connection and a high speed data connection if necessary.

Within the TT&C system, the TT&C Node that contains the spacecraft modems sends the transmit data to the transmitter and collects receive data from the receiver. The receiver and transmitter are directly connected with an RF link to allow these units to operate coherently.

The ADCS MicroNode communicates with a set of up to four reaction wheels over a separate 4-wire RS-485 multi-drop bus that connects them with the ADCS MicroNode. The ADCS MicroNode connects directly to provide analog control to the magnetorquers. This reaction wheel set is capable of providing full 3-axis inertial pointing control. If nadir pointing is required, then only one reaction wheel can be included on the bus to provide a momentum bias control system. The ADCS MicroNode has an RS-422 point-to-point bus that can be connected to either an Earth sensor or star tracker. Finally, the ADCS MicroNode connects directly, via analog and digital interfaces, to the sensors that make up the attitude determination suite for the spacecraft. These sensors include a magnetometer, sun sensor, and fiber optic gyro (FOG).

The GPS unit controls a timing bus that provides timing synchronization. The nominal bus design has the timing bus connected with the C&DH unit and the payload if necessary.

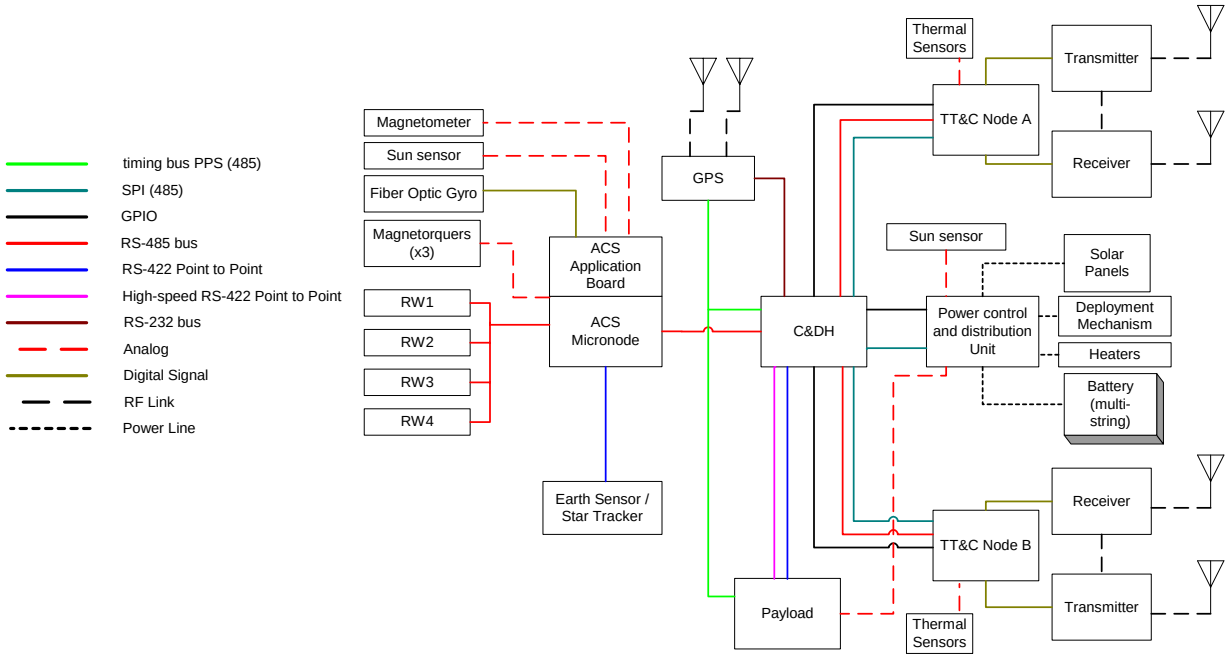

Figure 1 Multimission Bus Electrical Architecture

This generic architecture shows the modules that make up the module design for the microsatellite bus. The modules are used on an as needed basis. For example the NEOSSat mission design uses a star tracker connected to the ADCS micronode while the Radar Altimeter and Tech Demo missions use an earth sensor. Only the NEOSSat misson uses the Fiber Optic Gyros. The NEOSSat mission uses four reactions wheels where the Radar Altimeter mission uses only 1 to provide for a momentum bias attitude control. The architecture allows the modules to be mixed and matched according to the specific needs of the particular mission

The architecture is flexible in the manner that modules can be combined, but the interfaces are designed in from the beginning to provid for minimal NRE in the program. The structural design of the multimission bus employs the use of machined Aluminum trays to house the spacecraft electronics. The tray provides structural, thermal, and EMI/RFI shielding and support for the electronics. The trays are designed with the same profile to facilitate stacking. Different tray depths will be used to accommodate different component sizes. Each of the trays has different functionality and can be added and/or subtracted from the spacecraft depending on the specific mission requirements. These trays are assembled one on top of another and are secured together to form the tray stack. Once completed and secured, the tray stack becomes the structural backbone of each of the spacecraft

The precise arrangement of trays within the tray stack can vary from mission to mission. Wherever additional functionality is needed, the required components are added into the system (such as the fiber-optic gyroscope on the NEOSSat). Similarly, when a component is not needed, the tray that houses the component can simply be taken out from the stack.

Multi mission adaptability is assured by maintaining the same structural backbone, namely the tray stack, throughout multiple mission and launch vehicles. Maintaining the same tray stack components, namely the subsystem components and electronics, reduces NRE. Specific designs are only performed on components that have to change from one mission to the other.

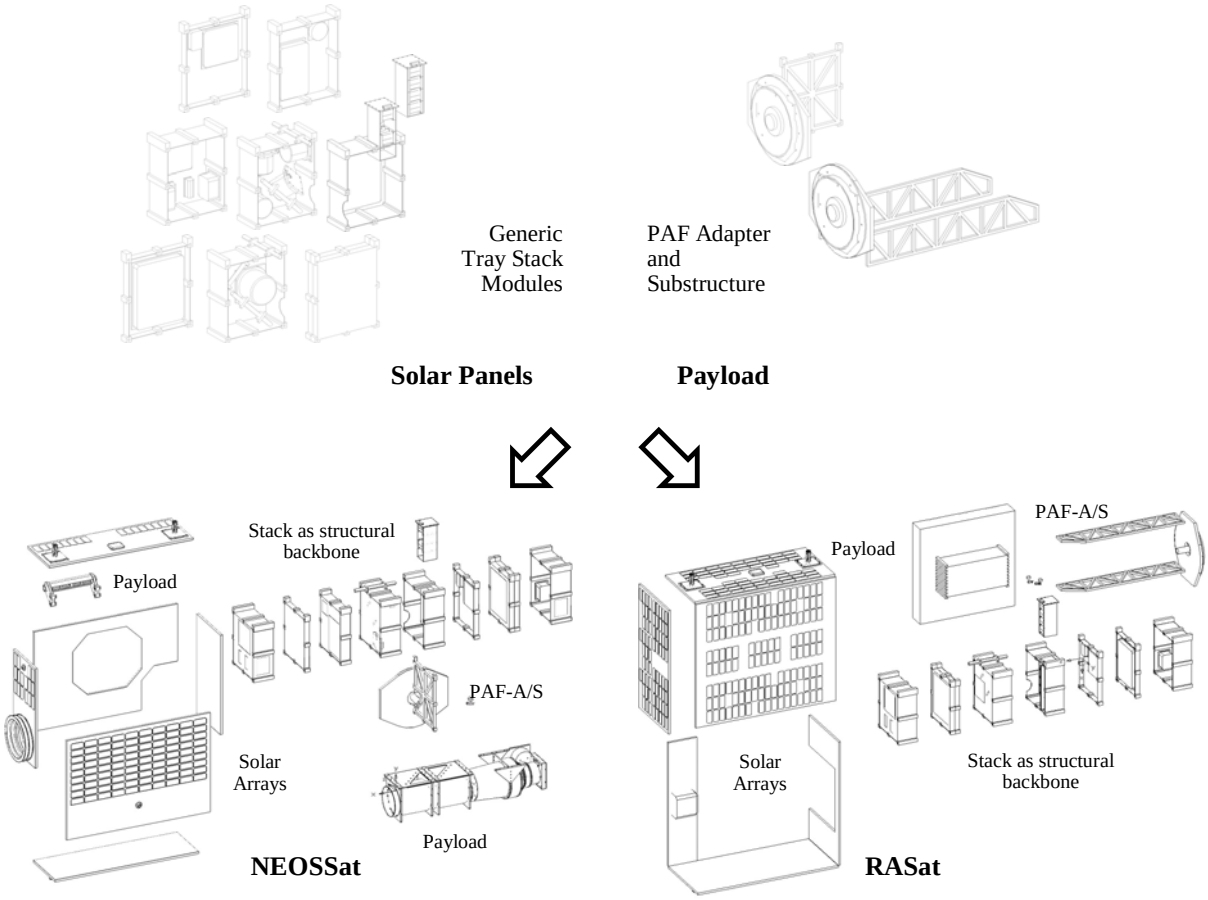

Figure 2 Multimission Bus structural architecture

Because each payload has differing power and orbit requirements, each of the spacecraft will have different solar array and solar panel design. To remain compatible with multiple launch vehicle accommodations and Payload Attach Fixture (PAF), it may be necessary to use a secondary structure (substructure) to adapt the tray stack to a specific available volume and center of gravity alignment requirements.

Therefore, the structural architecture consists of a tray stack containing the electronics which is essentially common and interchangeable from mission to mission, with a mission specific (PAF) Adapter, substructure and exterior solar panels that permit mission specific power generneration and launch accommodation. This arrangement is shown in Figure 2 for the NEOSSat and RASat missions; the first and second missions for the multimission bus. This shows the common generic tray stack modules combined with mission specific PAF Adapter, substructure, solar panels and payload.

An important facet of the design is the ability to launch on a multitude of launch vehicles. Essentially there are three key aspects of this, launch accommodation, launch interface, and launch loads.

Accomodation on a number of launch vehicles is highly dependent on the payload dimensions as these to a certain extent drive the dimensions of the spacecraft. However, accommodation is handled by the mission specific design of the exterior panels, the payload and substructure to connect the payload to the tray stack.

The launch interface for different launch vehicles is handled by the design of a mission specific PAF adapter. This adapter interfaces the PAF with the tray stack as required for a specific mission.

The tray stack is designed to handle the launch loads for all the candidate launch vehicles as shown in Table 2. The mission specific substructure and PAF adapter are then designed for the specific launch vehicle to be used for a given mission..

Launch Vehicle	Min Natural Frequency	Quasi-static Loads	Sinusoidal Vibration Loads	Random Vibration	Factors of Safety
Taurus	Axial 35 to 45 or > 70 Hz; Lateral 25 Hz	Axial 8.0 g Lateral 2.5 g	---	0.004 g^2/Hz at approx 100 Hz 12.6 g_{rms}	---
Minotaur	Axial 35 to 45 or > 70 Hz; Lateral 25 Hz	Axial 8.0 g Lateral 2.5 g	---	0.004 g^2/Hz at approx 100 Hz 3.5 g_{rms}	---
Rockot	Axial 33 Hz; Lateral 15 Hz	Axial 8.1 g Lateral 0.9 g	Axial 0.8 g Lateral 0.5 g	6.8 g_{rms}	FS_u = 1.25 FS_y = 1.1
Dnepr	Axial 20 Hz; Lateral 10 Hz	Axial 8.3 g Lateral 0.8 g	≤ 0.6 g at ≤ 20 Hz	0.022 g^2/Hz at 100 Hz 6.3 g_{rms}	FS_u = 1.5 for flight loads
Delta IV ESPA	35 Hz	Axial 8.5 g Lateral 8.5 g	---	0.024 g^2/Hz at 100 Hz 6.04 g_{rms}	---
Atlas V ESPA	Axial 15 Hz; Lateral 8 Hz	Axial 5.5 g Lateral 0.4 g	Axial 2.0 g Lateral 2.0 g	---	---
Cosmos-3M	---	Axial 6.8 g	≤ 0.6 g at ≤ 100 Hz	0.040 g^2/Hz at 100 Hz 7.6 g_{rms}	FS_u = 1.30
Worst Case	**Axial 70 Hz Lateral 35 Hz**	**Axial 8.5 g Lateral 8.5 g**	**Axial 2.0 g Lateral 2.0 g**	**0.040 g^2/Hz 12.6 g_{rms}**	**FS_u = 1.50 FS_y = 1.10**

Table 2 Launch vehicle parameters for Multimission Bus[2-8]

CONCLUSIONS

A multimission microsatellite bus has been developed. The approach taken involves a modular set of avionics that can be mixed and matched as necessary for a given mission. The avionics centers on a C&DH computer, TT&C system, PCDU, and ADCS micronode computer that remain the same for all of the missions. Peripherial equipment is added as necessary. The primary structure for the bus is a common tray stack that is used for all missions. On a mission specific basis, payload, PAF adapter and substructure are designed as necessary. This also a great deal of structural commonality and allows the flexibility to accommodate a wide range of payloads and launch on a wide range of launch vehicles.

Acknowledgments

Dynacon would like to acknowledge the contributions of all of its subcontractors on this work; the UTIAS Space Flight Laboratory, Routes AstroEngineering, Maya Heat Transfer Technology, and Mayes Mullins. Dynacon would also like to acknowledge the support provided by all branches of the Canadian Space Agency and Defence Research and Development Canada.

References

1. Brassard, Gilles, "Microsatellite Missions, Payload and Generic Bus Requirements Specifications" CSA-SMSAT-RD-0004 Rev -, 12 August 2004.
2. Taurus Launch System Payload User's Guide, Orbital Sciences Corporation, Release 3.0, September 1999
3. Minotaur IV User's Guide, Orbital Sciences Corporation, Release 1.0, Jan. 2005
4. Rockot User's Guide, Ver 4.0, Rev. 0, Eurockot, Nov. 2004
5. Dnepr Space Launch System User's Guide, Kosmostras, Issue 2, Nov. 2001
6. Technical Requirements Document for the DOD STP Standard Interface Vehicle, Boeing, Revision 0.79, Mar. 2005
7. Atlas Launch System Mission Planner's Guide, International Launch Services, Inc, and Lockheed Martin Corporation, 2004
8. Kalnins, I., et. al., "The COSMOS Launch Services and Launch System Modernization Program", Proceedings of the American Institute of Aeronautics & Astronautics Space 2001 Conference, Albuquerque, NM, Aug. 28-30, 2001.