CASPAR
Low-Cost, Dual-Manifest Payload Adapter for Minotaur IV

Joseph R. Maly and Scott C. Pendleton
CSA Engineering, Mountain View, California
jmaly@csaengineering.com, scottp@csaengineering.com 650-210-9000

Steven J. Buckley and John E. Higgins
AFRL, Space Vehicles Directorate, Kirtland Air Force Base, New Mexico
steven.buckley@kirtland.af.mil 505-853-7799, john.higgins@kirtland.af.mil 505-846-5087

Eric J. Walsh
ATK Space Systems, Clearfield, Utah
eric_walsh@atk.com 801-775-1283

Ryan A. Hevner
Planetary Systems Corporation, Silver Spring, Maryland
hevner.ryan@planetarysystemscorp.com 301-495-0737

Scott R. Schoneman
Orbital Sciences Corporation, Chandler, Arizona
schoneman.scott@orbital.com 480-814-6688

Lt William A. Emmer
SMC Det 12/RPS, Kirtland Air Force Base, New Mexico
william.emmer@kirtland.af.mil 505-853-0704

Abstract The Minotaur IV Launch Vehicle is being developed by the Air Force Rocket Systems Launch Program (RSLP) to utilize excess Peacekeeper missile motors and provide low-cost launches for Government payloads to Low Earth Orbit (LEO). This vehicle uses three Peacekeeper stages, an Orion 38 motor, and avionics from the heritage Minotaur I vehicle. Nominal capability for Minotaur IV is almost 4000 lbm to LEO. The fly-away cost is just over $20 million. The Composite Adapter for Shared PAyload Rides (CASPAR) Multi-Payload Adapter (MPA) will enable a Minotaur IV to launch two large satellites (1000-2000 lbm) for about $10 million each.

The CASPAR MPA is being designed for projected Minotaur IV launch load environments, with design objectives of light weight, integrated vibration isolation, low shock, and modularity. An innovative composite design, including co-cured composite stiffening, provides a lightweight structure with optional access doors. Low-shock separation systems are integrated for MPA and satellite separation events. Vibration isolation systems protect the payloads from the dynamic environment of the Peacekeeper motor stack, and isolation tuning will enable a range of payloads and facilitate modular designs. Qualification testing of a full-scale adapter is planned for early 2006. Design variations are being considered for existing and new launch vehicles.

Introduction

Multi-Payload Adapters (MPAs) represent the most efficient way to maximize access to space for small satellites by ensuring that excess spacelift capacity is not wasted [1]. The CASPAR is designed to support co-manifested primary payloads, allowing one rocket launch to support two satellite launches (Figure 1). The Minotaur IV is being developed for the Air Force by Orbital Sciences Corp. This new launch vehicle will utilize excess Peacekeeper missile motors, combined with Orbital's commercial avionics

component and Stage 4 motor to provide launches to low earth orbits (LEOs). Nominal capability for the Minotaur IV is almost 4000 lbm to LEO, enabling the launch of multiple satellites on the same launch mission. CASPAR is being designed using a modular approach so it can be adapted to other launch vehicles.

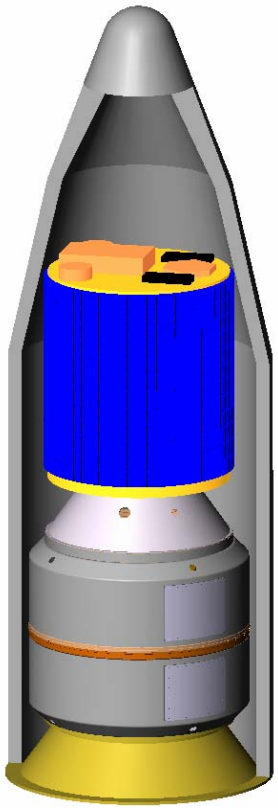

Figure 1. CASPAR with co-manifested primary spacecraft in fairing

Standardization has been identified as key to lower mission costs and more rapid mission schedules. Standard mechanical interfaces are a basic assumption for this MPA development. The Minotaur IV payload interface is identical to the Evolved Expendable Launch Vehicle (EELV) payload interface. CASPAR is designed to integrate with this payload interface and also can accommodate existing payload adapter cones for mounting satellites with smaller diameter mounting flanges.

The CASPAR MPA is being designed under a Small Business Innovative Research Program (SBIR) with the Air Force Research Laboratory Space Vehicles Directorate (AFRL/VS). The Space and Missile Systems Center Det 12 is providing requirements definition to ensure that the CASPAR meets payload and launch vehicle requirements. CSA Engineering is leading a team composed of ATK Space Systems and Planetary Systems Corporation to develop the CASPAR concept and hardware. An innovative design by ATK provides a lightweight structure with composite stiffening. Planetary Systems' Lightband separation systems provide low-shock MPA separation and spacecraft release at no significant mass hit for the payloads. CSA Engineering's SoftRide vibration isolation will protect the spacecraft from the launch vibration environment of the Peacekeeper motor stack, specifically targeting mitigation of the standing wave vibration from the first-stage solid rocket motor. The Air Force and Orbital are guiding the effort to ensure that the CASPAR system provides the tool necessary to enable multiple payload missions using the Minotaur IV.

Minotaur IV

The Minotaur IV Space Launch Vehicle (SLV), shown in Figure 2, is well suited to launch multiple small satellites on one SLV because of its relatively high spacelift capacity and lower fly-away cost over existing SLVs. For example, the Minotaur IV has about three times the capacity of the Minuteman II-derived Minotaur I for about the same fly-away cost. The Minotaur IV is derived from the Peacekeeper Intercontinental Ballistic Missile (ICBM) solid rocket motors. It uses three of the four Peacekeeper stages with a commercial Orion 38 Stage 4 and Orbital's existing avionics – housed in a new composite Guidance and Control Assembly (GCA) structure – and a 92-inch fairing that was developed and flown on Orbital's Taurus SLV.

The Minotaur IV is ideally sized to support the small satellite community. A larger small satellite may have a mass of 1000 to 1500 lbm. A medium-sized small satellite might have a mass of around 400 lbm. The Minotaur IV is sized to carry one large-class and several medium-class satellites on a single mission. The Minotaur IV can also carry two larger small satellites (co-manifested primary spacecraft) doubling the utility of a single SLV launch. The large payload volume (80.9 inches in diameter and over 120 inches long) conveniently supports multi-payload missions. The only requirement is to develop adapters that allow the use of the standard payload interface on the Minotaur IV, a 62.01-inch, 121-hole bolted flange, to carry several payloads. The CASPAR is directly aimed at providing this capability.

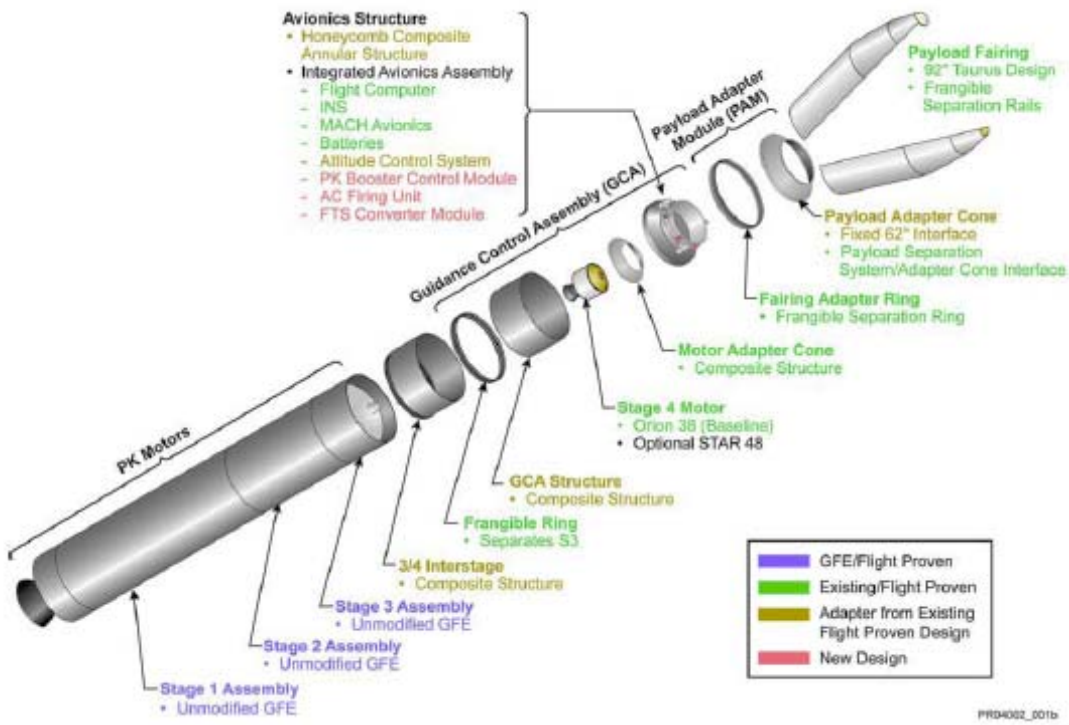

Figure 2. Minotaur IV

MPA Structure Design

Environments

Structure design for a launch vehicle adapter is driven by the environments to which it will be subjected prior to and during launch. Launch loads are always significant, and the solid-rocket ICBM motors provide a substantial environment for the CASPAR design, as documented in the Minotaur IV User's Guide [2].

	load case	load factor
axial lateral	compression	+ 6.8 g 0.8 g
axial lateral	tension	- 0.3 g 4.1 g
axial lateral	lateral	+ 4.0 g 4.1 g
axial lateral	max axial	+ 11 g 1 g

Table 1. Design load factors

Design load factors for CASPAR, listed in Table 1, were derived from worst-case loads in the User's Guide. These load factors,

combined with stiffness requirements, are used for the composite structure design. The stiffness target is based on the dynamics of the launch stack, and a minimum frequency of 6 Hz has been established for the fundamental rocking mode on the launch vehicle with a 2000-lb spacecraft mounted to the forward CASPAR interface.

A resonant burn characteristic of the Stage 1 motor creates a sinusoidal vibration which varies between 45 and 75 Hz. This load environment is the target of the vibration isolation system.

Thermal and moisture conditions during fabrication, shipping, integration and encapsulation are also important design environments because of the composite construction and mismatch in material expansion coefficients. The anticipated temperature and humidity ranges are expected to be 70ºF ±10ºF during payload integration and encapsulation with 35% to 55% relative humidity. For the period of post-encapsulation through launch, expected temperatures are still benign (70ºF ±15ºF) with nearly the same humidity conditions as for integration. Conservative assumptions have been made for survival temperatures, i.e., -20ºF to 150ºF.

Composite Structure

The purpose of the composite structure of the MPA is to provide load path for up to a 2000-lbm primary external payload and cargo volume for another large internal payload. The composite shell assembly of the MPA is shown in Figure 3. The composite structure of the MPA consists of two symmetric 74-inch-diameter cylinders joined together by a separation system. Two identical halves enable ease of stacking and reduced production costs. A break at the center plane optimizes the separation path for the top half of the MPA and the inner payload.

The forward and aft ends of the MPA have conic transitions that taper down to a bolt circle diameter of 62.01 inches to allow for mating with the payload ring on the Minotaur IV SLV. The approximate height of the composite halves mated with the separation system is 60 inches. The MPA shell provides an internal cargo volume of approximately 179,000 cubic inches with a maximum payload height of approximately 60 inches.

Figure 3. Composite shell assembly

Several of the design and overall system details of the MPA were chosen to maintain the simplicity and flexibility of the structure. The construction of the MPA is a solid graphite/epoxy laminate shell. This allows for proven manufacturing and tooling methods, and the use of symmetric halves reduces the number of tools required to manufacture the structure. To further simplify the component manufacture, the MPA shell will have composite flanges, eliminating the need to secondarily bond a flange onto the structure. To accommodate payloads requiring a thermally controlled launch environment, each half of the MPA shell contains four 4.1-inch-diameter holes to allow for the attachment of HVAC ducting.

The separation system is bonded to the composite shell in a double overlap joint, as shown in Figure 4. The separation system can

be deployed by the ground crew, and is easily disassembled and re-assembled. This allows it to be used as a field joint by payload integration personnel.

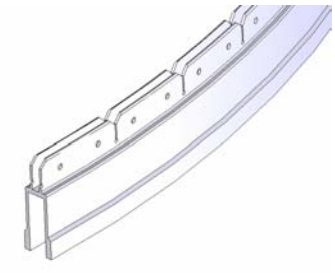

Figure 4. Double-lap extrusion on Lightband for mating to composite shell

After payload integration and MPA assembly, ground crews may require access to the internal payload. To meet this access requirement, each half of the MPA shell will have an optional assess door measuring 15 inches tall and 21 inches wide. The access door covers are non-structural; therefore, a pad-up is needed around the access door perimeter to maintain stiffness. The reinforcement pad-up around the access door perimeter consists of doubler plies on the outside of the MPA structure and a bonded aluminum doubler on the inside surface. The combination of the doubler plies and aluminum doubler provides the needed reinforcement around the door opening and has little impact on the internal payload volume.

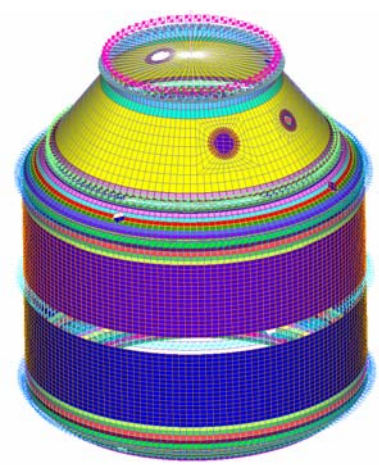

Figure 5. CASPAR finite element model

The MPA structure was modeled and meshed using IDEAS, and it was analyzed using ABAQUS, MSC.Patran, MSC.Nastran, and closed form solutions. In Figure 5, a model of the MPA assembly stack is shown. The shell design has to meet the strength, buckling and stiffness requirements provided by Orbital. The stiffness requirement of the structure drives the lay-up and thickness of the composite shell. Additionally, the stiffness requirement necessitates the structural reinforcement of the conic transition at each end of the MPA structure. Initially, the idea of stiffening the conic transition with T-shaped gussets was considered. Although this design concept provided the targeted stiffness, the stiffening gussets concept was replaced with a co-cured composite kick ring at the cylinder-to-conic transition, as shown in Figure 6. This concept leverages innovative ATK manufacturing techniques and enables the use of simpler and less expensive tooling.

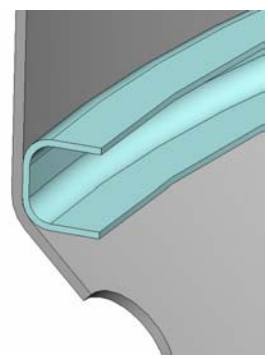

Figure 6. Kick ring at transition region

Separation System

The Latching Lightband (LLB) is enabling technology under development that allows for low shock separation of systems 60 inches in diameter and above, and the 74-inch-diameter of the CASPAR cylinder is an ideal application. A motor-driven system disengages a plurality of radially hinged latches from accepting rollers in the opposing structure. The benefit is the relatively low preload required to achieve high stiffness as compared to a typical V-Band. As diameters

grow larger, the quantity of motor-driven deployment mechanisms increases to offset the need for higher preload. The Latching Lightband also offers a much safer and significantly lower separation shock than explosive frangible joints. For integration with the CASPAR composite shells, LLB extrusions have been customized to provide the double-lap joints at the composite/LLB interfaces, as shown in Figure 4.

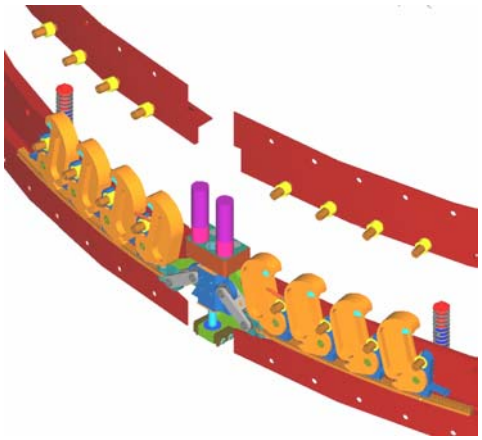

Figure 7. Latching Lightband cross section showing motor-driven latches on Lower Ring and accepting rollers on Upper Ring

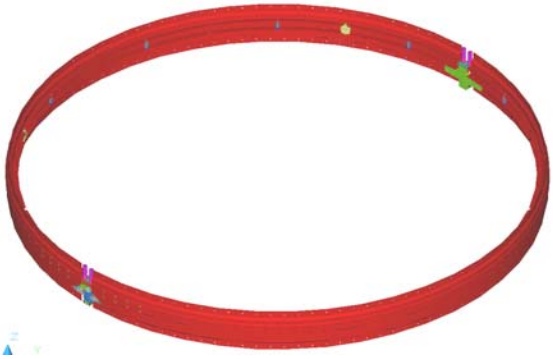

Figure 8. Stowed Latching Lightband

Separation systems in the 60-inch-diameter and smaller range employ the existing Motorized Lightband (MLB) technology. MLBs are baselined for CASPAR spacecraft separation. The MLB system uses a motor-driven mechanism to compress a retaining ring that engages a plurality of tangentially hinged latches into accepting grooves in an upper ring, typically the space vehicle side. This system offers the benefits of low weight, low shock and high strength. Since the retaining ring is in compression, the system is fracture proof as compared to a V-Band's tensile loaded band. Since the Motorized Lightband – along with the Latching Lightband – is composed entirely of aluminum, preload is independent of temperature. Also, as rollers are used to reduce friction, the preloaded retaining ring does not creep with time.

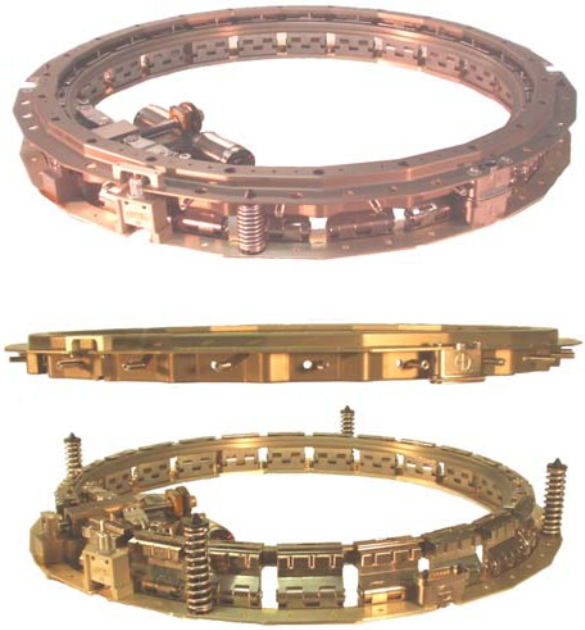

Figure 9. 15-inch Motorized Lightband, stowed and deployed

The added value of both Lightbands being motor driven is the ability to complete a full deploy and re-mate cycle in several seconds. This allows for substantial cost reduction and time savings. The simplicity with which a Lightband can be re-mated allows for rigorous pre-flight testing of every unit and provides the ability to conduct several hundred separation cycles if desired (though not likely for a flight unit). This feature also enables the use of the LLB as a field joint for the CASPAR MPA.

Both MLB and LLB provide low-shock separation events that are aligned with the overall design approach for CASPAR.

Isolation System

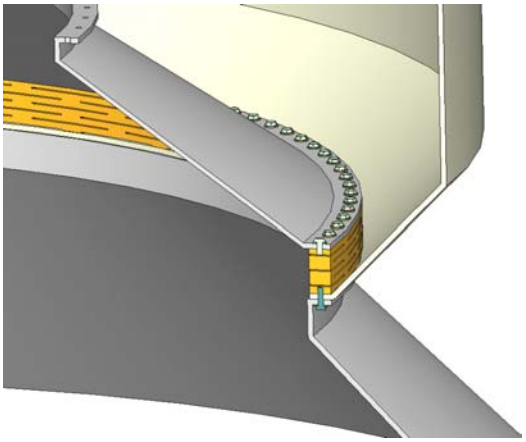

Figure 10. Isolation system for CASPAR internal spacecraft

The CASPAR MPA will feature whole-spacecraft isolation designed to isolate the entire spacecraft from the dynamics of the launch vehicle. All spacecraft launched on CASPAR will benefit from this flight-proven technology, specifically targeting the sinusoidal resonant burn load of the Stage 1 rocket motor. Separate isolation rings for both interior and exterior payloads will be located at the 62-inch-diameter interfaces. Figure 10 shows the location of the isolation system for the interior spacecraft. The exterior spacecraft isolation system is located at the forward adapter interface.

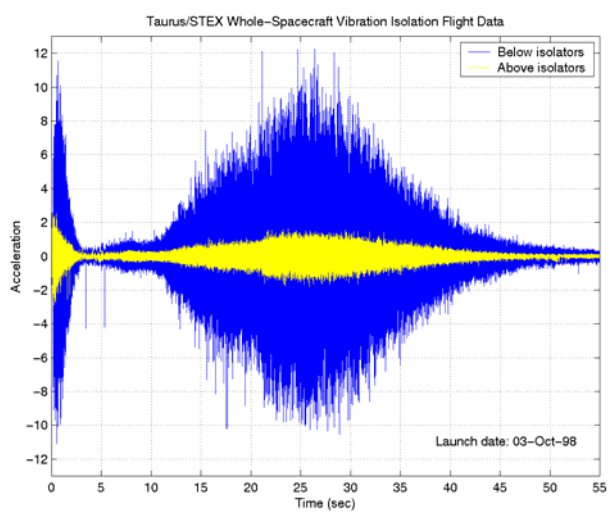

Figure 11. STEX flight data, below and above isolators

Previous vibration isolation systems targeting resonant burn loads on Minotaur and Taurus launches have employed SoftRide UniFlex or MultiFlex isolators [3]. Measured data from the Taurus/STEX launch of October 1998, shows a factor-of-five reduction in the broadband acceleration levels above the isolators, compared to accelerations measured below the isolators, as seen in Figure 11. However, the CASPAR isolation system under development will use a ShockRing configuration. The ShockRing is typically designed for higher frequency isolation performance than is required to reduce the effects of Stage 1 resonant burn [4]; but because of the large diameter interface and relatively small spacecraft mass, the ring configuration appears feasible for resonant burn mitigation on Minotaur IV.

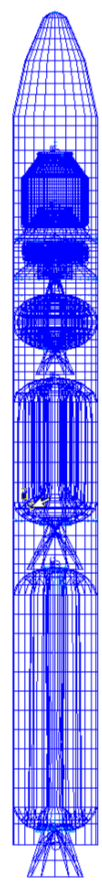

Figure 12. Minotaur IV model with CASPAR

Design of a prototype CASPAR ShockRing is currently underway, using a representative spacecraft and a system finite element model of the Minotaur IV vehicle, shown in Figure 12. To provide an accurate model for isolation system design, all structural elements with significant compliance contributions must be included in the model, including separation systems and interface flanges.

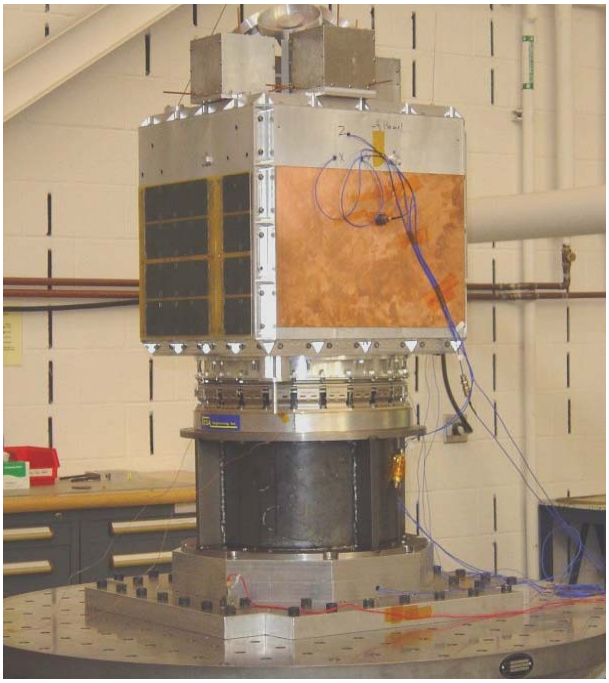

Figure 13. FalconSat3 on ShockRing and Lightband in random vibration test

ShockRing isolation performance under random vibration loads has been demonstrated during qualification testing of the FalconSat3 spacecraft, slated to launch as an ESPA (EELV Secondary Payload Adapter) spacecraft on the STP-1 Mission. The FalconSat3 spacecraft is shown in Figure 13 in its random vibration test configuration. The Lightband separation system is included in this test stack, and tests were performed with and without the ShockRing to demonstrate isolation performance. Measured axial responses in Figure 14 show the significant reductions achieved above the isolation frequency, which is around 85 Hz. For the CASPAR design, the isolation system will be configured to attenuate spacecraft responses to the resonant burn load at its minimum frequency of 45 Hz.

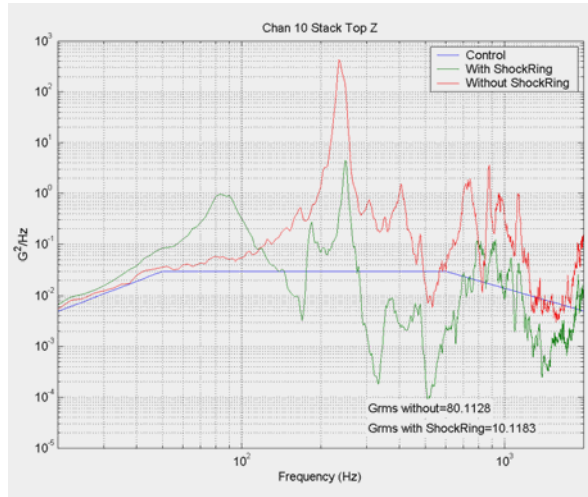

Figure 14. Random vibration measurement on FalconSat3 with and without ShockRing

Composite fabrication and MPA Assembly

Assembly of the MPA will bring together the two composite halves and the separation- and isolation-system rings.

The composite structure will be laid up on a steel male mandrel utilizing trapped rubber and/or steel molds. After the laminate has been cured and extracted from the mandrel, the flange and the cylindrical edge of each half will be trimmed and milled in a machining center. After the trimming and milling operation, holes will be drilled in the flange to allow for mating to the launch vehicle and payload adapters.

The separation system will be bonded to the composite shell in a double overlap joint with paste adhesive. The bonding operation will be conducted with the aid of a bond fixture that is integrated in the trim/machining fixture. The bond-line between the Lightband and composite will be controlled using radial adjustments on the Lightband and bond-line control filler in the adhesive or stainless steel wires.

The exterior spacecraft isolation system can be mated to the MPA prior to delivery or at the integration site. The interior spacecraft isolation system will be mated at the integration site because of the three-structure joint at the base of the MPA, shown in Figure 15. Spacecraft adapters will be mated at the integration site.

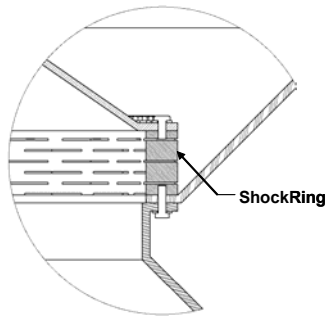

Figure 15. Mounting of interior spacecraft cone and ShockRing to aft MPA and Minotaur IV flange

Qualification Testing

Qualification testing of the CASPAR structure will be performed in the qualification test facility (Figure 16) at AFRL, Building 472, on Kirtland Air Force Base. The steel frame load fixture and its system of hydraulic actuators will be used to apply and react the qualification static loads on CASPAR [5], currently being used for design.

In the qualification test configuration, CASPAR will mount to the base of the load frame through an aluminum adapter. This adapter will simulate the stiffness of the launch vehicle adapter cone below CASPAR and also minimize load peaking in the structure. Likewise, the forward attachment flange will use an identical adapter to evenly distribute the load to CASPAR and simulate the launch-stack interface stiffness.

A load head, mounted to the forward aluminum adapter, will be used to attach hydraulic actuators to the system. The hydraulic actuators will apply the required forces directly to the load head, which will transfer the load to the forward aluminum adapter and through the MPA, to be reacted by the aft adapter and load frame. A load cell will be used with each actuator and the load signal monitored during each test. A control loop will be used with the load cell signal in order to avoid an over test.

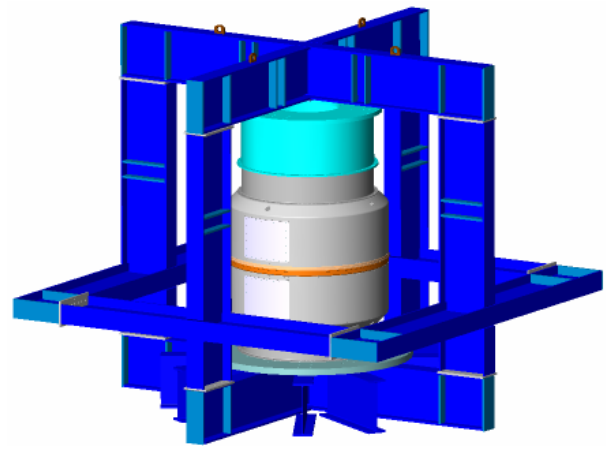

Figure 16. CASPAR structure in qualification load frame

CASPAR will be extensively instrumented with strain gauges that will be monitored and recorded during test. The CASPAR finite element model will be used to determine strain gauge locations and orientations. Results from the tests will be used to verify the model.

An instrumented hammer tap test will follow qualification static load testing. The tap test will use the configuration described above with the actuators removed. Without the actuators attached to the load head, CASPAR will be in a flight-like configuration, with the load head representing a heavy, external payload. Driving point frequency response measurements will be acquired for correlation with the system finite element model.

Launch Site Integration

The Minotaur IV spacecraft integration process features encapsulation of the spacecraft and fairing as a unit, independent of the processing of the rest of the launch vehicle. The CASPAR MPA is designed to

follow this same modular integration approach. With the exception of the payload cones, all of the components within the CASPAR MPA have been described in previous sections of the paper. The payload cones provide a means of adapting specific payloads to the SLV or MPA composite flange. The conic section of the payload cones is graphite/epoxy facesheet and aluminum honeycomb sandwich construction. The forward and aft flanges of the payload cones are solid graphite-epoxy laminate construction.

The modular CASPAR design can accommodate several options in the order of integration of the various elements – adapter cones and MPA components – depending on the particular spacecraft and mission needs. One of the proposed integration options for the CASPAR MPA stack is shown in Figure 17. Step 1 of the integration process is to mount the internal payload and separation system to the internal payload cone. In Step 2, the lower half of the MPA shell is mated to the SLV cone. In Step 3, the internal payload is placed on the isolation ring and installed in the lower half of the MPA shell. During Step 4, the external payload cone is mounted to the upper half of the MPA shell with the isolation ring. The upper half and the lower half of the MPA shell are mated using the Lightband field joint in Step 5. In Step 6, the external payload and separation system is mated to the top of the MPA. This integrated module can then be subjected to interface verification testing and, in a final step, be encapsulated within the Minotaur IV fairing. Two large access doors are incorporated into the MPA structure to accommodate post-encapsulation access and testing of the inner spacecraft. These doors can be located as necessary to support mission-specific requirements.

The integrated spacecraft/MPA/fairing unit is then transported to the launch pad where it is lifted by a crane and emplaced on top of the previously integrated launch vehicle assembly.

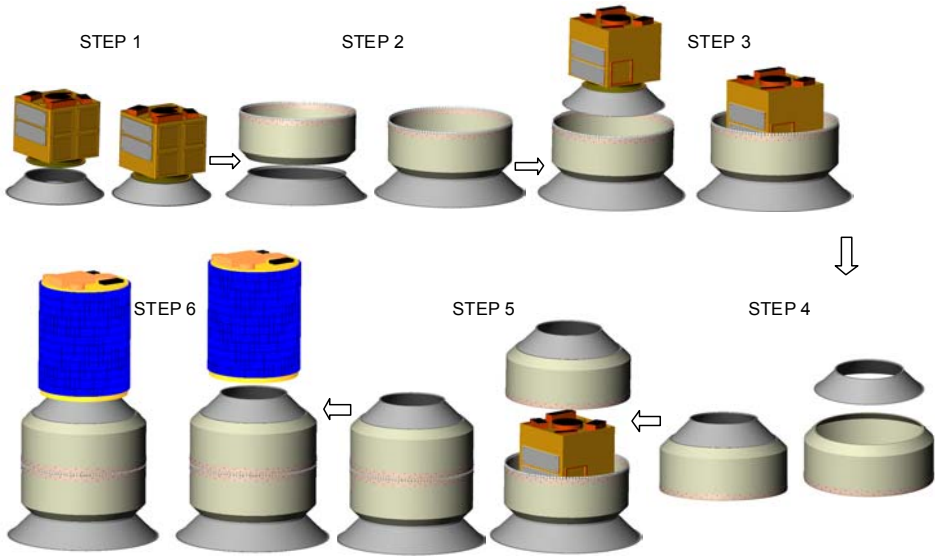

Figure 17. Optional integration sequence

Flight Opportunities

Even though the first Minotaur IV SLV is currently in development, the risk of this vehicle is considered relatively low due to the extensive heritage of the vehicle components. There are currently no multi-payload missions manifested on Minotaur IV, but there are a number of known potential customers.

The Minotaur IV/CASPAR configuration offers dramatically lower cost for access to space, compared to existing launch vehicles, for spacecraft willing to co-manifest for launch. For example, two spacecraft designed to fly as single-payload missions on Pegasus or Minotaur I could team to fly together on Minotaur IV for approximately $10M per spacecraft. Additionally, the CASPAR has been designed to be as spacecraft friendly as possible, with integrated isolation and low-shock separation systems, while maximizing volume and mass available to the spacecraft.

Interested spacecraft developers must be willing to work toward requirements and schedule to accommodate a dual manifest. Ideally, spacecraft managers interested in this new opportunity should start working with the Minotaur IV team as early as possible, so their design can be tailored for compatibility with a dual-manifest CASPAR launch. Information on potential Minotaur IV missions is available immediately by contacting Mr. Mitch Elson of the Rocket Systems Launch Program at 505-846-5113 or at mitchell.elson@kirtland.af.mil.

Conclusion

The combination of the Minotaur IV SLV and the CASPAR MPA results in a unique opportunity to enable maximum access to space for the small satellite community. The CASPAR payload interfaces have been standardized to ensure efficient integration of most satellites. Features such as payload isolation and custom access doors will also ensure that the payload needs are met. The Minotaur IV/CASPAR configuration offers the best opportunity to drastically reduce launch costs (50% reduction) by ensuring that precious spacelift capacity is not wasted. Innovative composites manufacturing methods and features such as vibration and shock isolation and low-shock separation support ongoing efforts to advance technology in support of the small satellite community. Qualification testing of a full-scale adapter is planned for early 2006.

Acknowledgments

The CASPAR MPA development is supported by a Small Business Innovative Research (SBIR) contract from the Air Force Research Laboratory, Space Vehicles Directorate (AFRL/VS), with funding from the Rocket Systems Launch Program (RSLP) of the Air Force Space and Missile Systems Center (SMC). The authors would like to acknowledge contributions from Lt Dan Highlander, SMC Det 12/RSLP; Jeff Welsh, AFRL/VS; Lisa Berenberg and Jason Topham of SMC Det 12/STP; Laurie Clark, Bill Hooper, Bill Fawcett, Otto Ratz, and Frank Jessen of ATK; Greg Mehle, Conor Johnson, Emily Fowler, Greg Sanford, and Paul Wilke of CSA Engineering; Walter Holemans of PSC; David Cohen, Mark Chadwick, Chris Angulo, Keith Paquette, Ruwan Arseculeratne of Orbital.

References

[1] Higgins, J.E., B.J. Arritt, E.R. Fosness, P.M. Wegner, and S.J. Buckley, "Multiple Payload Adapters; Opening the Doors to Space," Proceedings of 16th Annual AIAA/USU Conference on Small Satellites, Logan, Utah, August, 2002.

[2] Orbital Sciences Corporation, "Minotaur IV Payload User's Guide", Release 1.0, January, 2005.

[3] Johnson, C.D. and P.S. Wilke, "Recent Launches Using the SoftRide Whole-Spacecraft Vibration Isolation System," AIAA Space 2001 Conference, Albuquerque, New, Mexico, August 28-30, 2001.

[4] Johnson, C.D. and P.S. Wilke, "Whole-spacecraft shock isolation system," Proceedings of SPIE 9th Annual International Symposium on Smart Structures and Materials, San Diego, California, March 2002.

[5] Sanford, G.E., "Development and Structural Qualification of the EELV Secondary Payload Adapter (ESPA)," Proceedings of 43rd AIAA/ ASME Structures, Structural Dynamics, and Materials Conference, Denver, Colorado, April, 2002.