PAPER REFERENCE NUMBER **SSC03-VI-3**

Coverage Options for a Low cost, High Resolution Optical Constellation

M E Price*, W Levett**, K Graham***

*Space Department
1004, A8 Building
QinetiQ
Cody Technology Park
Farnborough
Hampshire
UK
+44 (0)1252 392531
meprice@space.qinetiq.com

**Space Department
1004, A8 Building
QinetiQ
Cody Technology Park
Farnborough
Hampshire
UK
+44 (0)1252 394295
walevett@space.qinetiq.com

***Space Department
1004, A8 Building
QinetiQ
Cody Technology Park
Farnborough
Hampshire
UK
+44 (0)1252 394664
klgraham@space.qinetiq.com

This paper presents the range of coverage options available to TopSat like small satellites, both singly and in a small constellation. TopSat is a low-cost, high resolution and image quality, optical small satellite, due for launch in October 2004. In particular, the paper considers the use of tuned, repeat ground track orbits to improve coverage for selected ground targets, at the expense of global coverage.

TopSat is designed to demonstrate the capabilities of small satellites for high value remote sensing missions. It is a 108kg, sun-synchronous satellite, designed to provide 2.5m resolution imagery direct to users in the vicinity of the imaged area. Its objectives are to demonstrate the capability to cost performance available from small satellites, the utility of direct reception of remotely sensed imagery, and the affordability of constellations and individually owned assets. A description of the satellite, and update on the development and flight build of the satellite is given, as of June 2003.

Two coverage improving augmentations to the TopSat satellite are discussed, namely the addition of a propulsion system and more capable attitude actuators. With limited orbit control, achievement and maintenance of tuned orbits, and phasing of a constellation within orbits, become practicable. TopSat is an agile small satellite, allowing boresight reorientation required for slews during imaging. The capability for performing multiple images in a single target pass is considered, with the existing and improved torque actuator implementations. Similar options for performing stereo imaging with 2 formation flying TopSats are outlined.

Reconfiguration of repeat ground track orbits for a single satellite is analysed in terms of fuel cost and drift orbit options. A one day repeat orbit case is presented which would allow daily coverage of a fixed target, with orbit reconfiguration required to allow global access. A typical mission for such a satellite is summarised, along with practical requirements for the propulsion system.

Coverage options for constellations of between 2 and 4 satellites are then also scrutinised, with fuel estimates for the most promising options explored. Again, the benefits that could be achieved by using repeat ground track orbits are weighed against the fuel requirements, to maintain and reconfigure such a constellation.

The TopSat mission is a collaboration between four UK partners. QinetiQ are leading the mission and providing data handling and ground segment elements. Rutherford Appleton Laboratory (RAL) are developing the camera, Surrey Satellite Technology Limited (SSTL) are providing the bus, and InfoTerra are responsible for developing potential data markets. The programme is jointly funded by the UK Ministry of Defence (MoD) and by the British National Space Centre (BNSC).

Keywords: satellite coverage, off axis optics, microsatellite, repeat ground track, low cost

Coverage Options for a Low Cost High Resolution Optical Constellation

1. Introduction

Global coverage is not a requirement for many optical imaging mission concepts. Regular imagery of a fixed area, or of a number of areas in a locality is often of higher priority. Coverage in such circumstances can be improved, at the expense of global coverage, by the use of repeat ground tracks and consequent selective coverage.

Low cost optical remote sensing satellites tend to be limited in both quality of imagery and coverage capability. Low cost often means small, which can mean limited performance for an optical payload; limited aperture, limited focal length, limited signal to noise. Low cost often also means limited pointing capability, with coarse accuracy nadir pointing being the baseline option, with concomitant restriction on image targeting.

Even with the agility to image out to the Earth's horizon if required, a single satellite is limited in its coverage. As pointing geometry moves off axis, so both signal and resolution decrease. For acceptable performance, imaging tends to be limited to a maximum of around 35° off nadir. For a circular low Earth orbit, this means that global coverage is possible typically in 4 days.

This paper describes options which would allow optical imagery with global daily coverage, at high resolution, from a low cost system. Use is made of the TopSat satellite as a baseline for a hypothetical low cost constellation. TopSat is a low cost, agile small satellite designed to produce high resolution, high quality imagery. Agility allows a wide coverage for optical imaging targets, and also allows imaging manoeuvres that boost the signal strength and hence image contrast and fidelity.

Section 2 gives the background to TopSat, which is currently in flight build, and gives its current status, as of June 2003. Section 3 looks at the coverage available from such a single satellite, with section 4 considering 2 specific augmentations which would improve that coverage. Section 5 looks at orbit configurations, and the fuel requirements to reconfigure the orbits. Section 6 provides conclusions and describes single satellite and constellation options which appear particularly attractive.

2. The TopSat System

The TopSat mission, conceived by QinetiQ Space Department, is designed to demonstrate the capabilities of small satellites for high value remote sensing missions. It is a sun-synchronous satellite, designed to provide high resolution imagery, direct to users in the vicinity of the imaged area. Its objectives are to demonstrate the capability to cost performance available from small satellites, the utility of direct reception of remotely sensed imagery, and the affordability of constellations and individually owned assets. An original mission remit limited the cost of the overall mission to £13M ($20M).

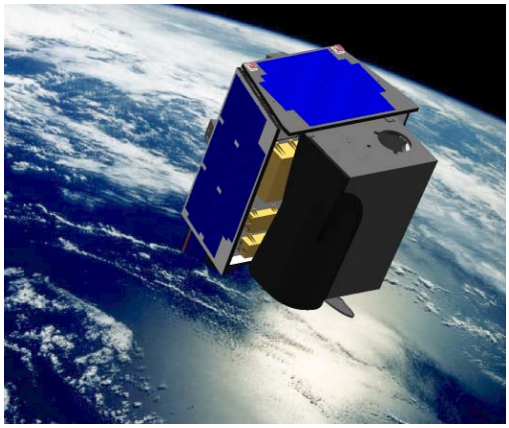

Figure 1 Topsat Spacecraft on Orbit

The 108kg spacecraft consists of a novel optical payload, which sits on a low cost, small satellite bus. The camera is capable of producing 2.5m resolution panchromatic and 5m multi-spectral imagery over a 15km wide swath, from around 600km altitude.

The TopSat mission is a collaboration between four UK partners. QinetiQ are leading the mission and providing data handling and ground segment elements. Rutherford Appleton Laboratory (RAL) are developing the camera, Surrey Satellite Technology Limited (SSTL) are providing the bus, and InfoTerra are responsible for developing potential data markets.

The programme is jointly funded by the UK Ministry of Defence (MOD) and the British National Space Centre (BNSC) Mosaic Small Satellite Initiative. The project encompasses design, build, launch and operations of the satellite, in addition to development of a mobile ground station to demonstrate "in the field" delivery and interpretation of image data, and the exploration of commercial markets for high quality, low cost imagery data.

Camera

The TopSat camera was designed to meet the requirement to provide high-resolution imagery over a wide field of view, with the minimum loss of light and geometric resolution. This led to the development of the three-mirror anastigmatic off-axis design, which allows high performance over a wide field of view in one axis (ideal for push-broom imaging) with no obstructive elements. The aperture size was then selected to provide a geometrical limit to the resolution with the radiometric resolution being matched by the implementation of time delay integration, by means of a spacecraft manoeuvre during imaging.

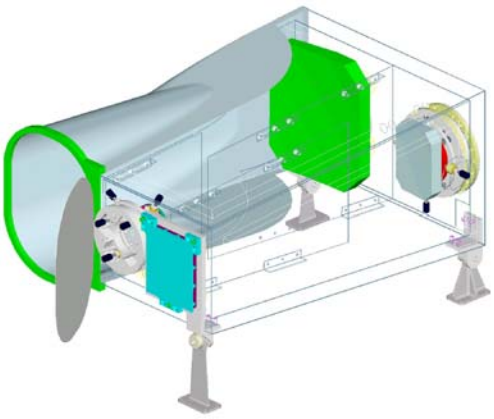

Figure 2 Topsat Camera

The camera is a compact, all reflective 3 mirror system, capable of producing images with a ground resolution of 2.5m, from an altitude of 600km. It has a focal length of 1680mm and aperture of 200mm. The camera occupies a volume of approximately 70x60x45cm and has a mass of 27kg, excluding the data storage subsystem. With no refractive optical elements there are no design requirements associated with chromatic aberration or glass darkening. In addition, this single design can support any waveband from optical to thermal infra-red. The basic layout of the camera is shown in Figure 1.

The camera optics are capable of a 25km field of view (FOV) at 600km altitude. The TopSat 15km FOV is a result of CCD and data throughput limits. The on orbit modulation transfer function (MTF) of optics, at Nyquist frequency of 71.43lp/mm, will be better than 0.31 over 2/3 of this FOV.

The camera has two linear CCD arrays. The first will provide panchromatic images at 2.5m ground sampling distance (GSD) and has 8000, 7µm pixels. The second CCD contains three linear arrays with red/green/blue filters, and will provide 3 colour imaging at 5m GSD. Each array has approximately 2100, 14µm pixels. Data will be read out of the 2 CCDs during imaging, and stored in an board data handling unit in solid state memory. There is on board storage capacity for 4 images. The image data, along with formatting and attitude information, can be downlinked to an X band groundstation at a later date via the X band modulator, amplifier and antenna.

Data handling

Each image from the camera provides 540Mbits of data at a maximum rate of 270Mbits per second. This data needs to be read, stored without power and transmitted to a mobile (small) ground receiving station. Towards this end fast DRAM was used as the main mass memory of the DHU. However, in order to minimise the power consumption FlashRAM was adopted for the store and forward events. TopSat provides the capability to store up to 4 full size images in non-volatile memory, and download a single full scene to a 2.7m receiver within 60 seconds – with no further pointing of the spacecraft or downlink antenna.

Figure 3 X band antenna

Satellite Bus

The design of the optical payload has had a strong impact on the design of the satellite platform, thus TopSat incorporates some significant differences to other SSTL modular microsatellites. The size and mass of the payload, in addition to requirements for structural and thermal stability, have had a very visible impact on the design of the platform; notable are the canted panels and external accommodation of the payload. Many changes lie deeper in the design, such as an advanced attitude determination and control system (ADCS) capable of accurate pointing, agile manoeuvring and TDI slew manoeuvres.

One of the key elements to the mission's success is the structural design, which must ensure as soft a ride as possible for the payload during launch, and offer structural stability to the camera when in orbit. The module trays have been strengthened to provide good support to the payload. Many items,

such as the VHF receivers, battery, fibre optic gyro

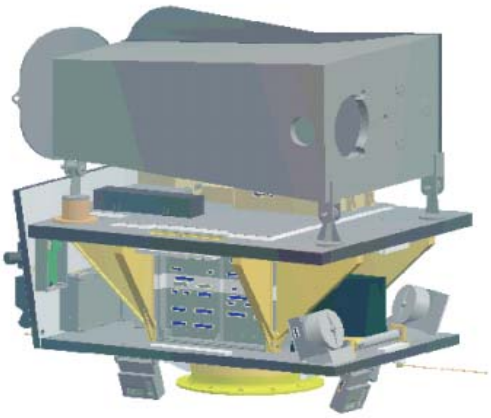

Figure 4 Spacecraft internal structure

and Earth horizon sensor electrical interfaces, are housed in alternative packages to allow them to be taken out of the stack and maintain a low spacecraft profile. Added structural stability is incorporated into the design by vertical support panels.

Virtually the entire payload sits on the payload panel, easing design and AIT tasks, which are carried out by the various members of the partnership. Housing the payload internally would have added to the mass and volume of the platform, reducing launch opportunities and increasing launch costs.

TopSat will use a VHF uplink for commanding, and UHF downlink for telemetry downlink. Imagery data downlink and payload telemetry will be via the X band system to either QinetiQ's fixed ground station at West Freugh, Scotland, or to the mobile ground station. The RF link is responsible for the typical platform housekeeping tasks as well as for payload commanding and telemetry retrieval.

The power system is based on the battery bus, maximum power point tracking topology. This is used on all of the previous SSTL missions and is particularly suited for low Earth orbit. The power conditioning unit is dual redundant, using a technology mix. In its nominal orbit, the orbit average power will be 42 W and peak power 80 W.

The on-board computer is an OBC 386. The computer is responsible for uplink and downlink tasks, running ADCS software and numerous other housekeeping functions. The OBC will store commands for the payload and pass them on prior to imaging.

Imaging Manoeuvre

As stated above, to compensate for the relatively small optics and aperture, an imaging manoeuvre is used to effectively slow down the rate at which the camera boresight scans over the ground, allowing longer integration times and so boosting signal. This is known as a time delay integration (TDI) manoeuvre, and the factor by which the ground speed is reduced, compared to the pushbroom case, is called the "TDI factor". A TDI factor of up to x4 is required for the mission to meet signal to noise requirements, with a x8 factor being available.

The manoeuvre takes the form of a pitch rotation in a direction which slows down the motion of the boresight over the ground. For short time periods, a constant rate rotation is sufficiently accurate to give almost constant ground rate.

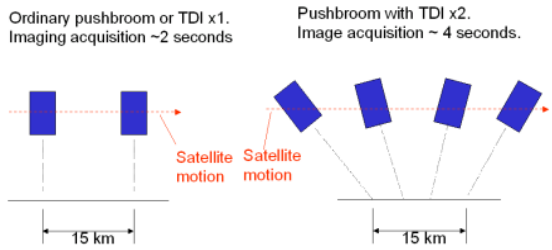

Figure 5 TDI manoeuvre

A satellite in a 600km altitude orbit has a speed of 7558m/s, its sub satellite point on the Earth's surface has a speed of 6908m/s, ignoring Earth rotation. So, the boresight of a pushbroom imager will travel, and so image, a swath 15km in along track direction in 2.17s. A pitch rate of 0.384°/s increases this time by a factor of 2, giving a TDI factor of 2. Similarly a pitch rate of 0.637°/s increases this time by a factor of 8, so taking 17.36s to complete the image.

TopSat will be capable of x8 TDI, thus the camera boresight will scan over the image area 8 times slower than for the pushbroom case. However, at x8 TDI some of geometric performance requirements specified to maintain image quality may not be met. Typically, the satellite will operate using x4 TDI, where all optical geometric performance requirements should be assured.

Ground Segment

TopSat will be controlled and tasked through an existing SSTL ground station in Guildford, UK. Image tasking will be routed via QinetiQ Farnborough, and SSTL for uplink to the spacecraft. Image data downlink will occur to either QinetiQ's fixed or mobile X-band ground stations.

TopSat will also use the 13m antenna at QinetiQ's West Freugh (Scotland, UK) facility as a fixed ground station, allowing larger volumes of imagery data to be received and archived.

Using a mobile ground station TopSat will provide near real-time imagery directly to a field based user. QinetiQ has developed a fully mobile ground system, known as the RAPIDS transportable ground station, with the system electronics and computers mounted in a customised Land Rover Defender. The ground station can be operational at a remote site within a few hours, and provides its own generator power.

Figure 6 Mobile ground station,

Current Status

The flight build of the spacecraft bus is almost complete, and it will then await payload integration. The camera flight optics are fully assembled and are undergoing final alignment, prior to integration of focal plane electronics. The data handling system is undergoing qualification and flight build, prior to integration with the camera.

Negotiations on the launch contract are being finalised, with a scheduled launch in October 2004.

Figure 7 Camera flight structure qualification

3. TopSat Coverage

Single Satellite and Constellation

Figure 8 below gives predicted coverage opportunities from TopSat (top), and from a 4 satellite constellation of TopSat like satellites (bottom). The assumptions used are 600km altitude orbit and 30° off nadir imaging. The first plot shows mean revisit intervals while the second shows maximum revisit intervals.

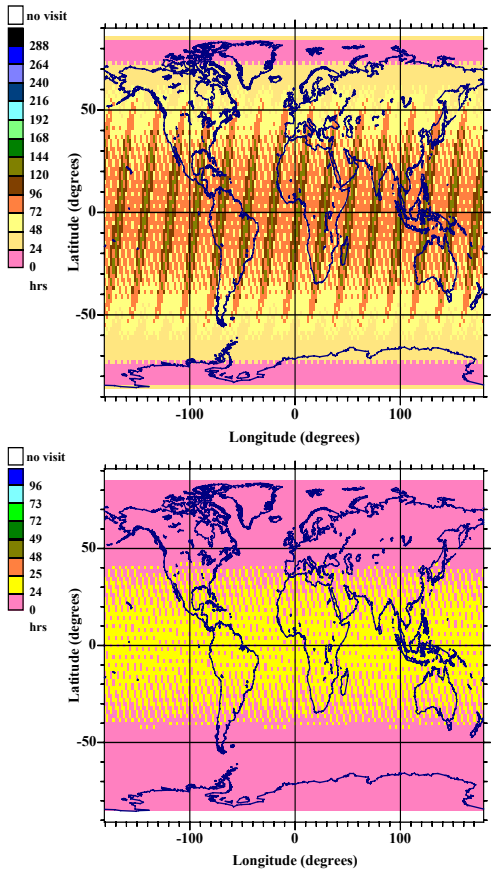

Figure 8 Revisit statistics for a single Topsat and a constellation of 4 Topsats (600km, 30° FOR)

With these assumptions, a single TopSat is seen to provide global coverage over a period of about 4 days. The majority of areas have repeat visits in 2 to 3 days. For a four satellite constellation global coverage is achieved on a daily basis.

The assumption of maximum acceptable off nadir imaging angle is significant for assessing revisit times and coverage. The ground range of the horizon from 600km is 2600km, indicating that if imaging to the horizon is acceptable, then global coverage is achieved daily with a single satellite. Figure 9 plots the ground range against off nadir angle for a 600km altitude.

Maximum Off-nadir Imaging Angle

A 30° angle is seen to cover a ground range of about 350km to each side of the ground track, or 700km total. This is approximately a quarter of the distance between consecutive ground tracks on consecutive orbits (2700km) and is the reason why global coverage is achieved on average in about 4 days.

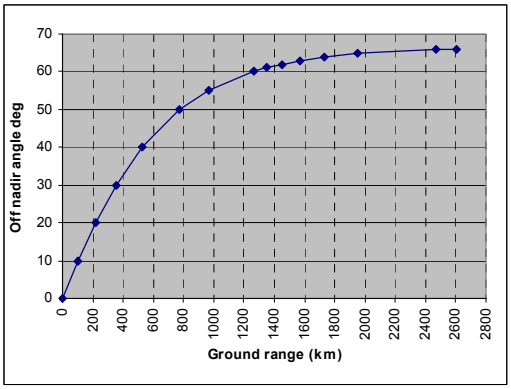

Figure 9 Ground range and off nadir angle

Higher off-nadir imaging is unfavourable for reasons of resolution and radiometry. Across track, and nominally along track, pixel sizes increase with slant range and the effects of Earth curvature. Signal strength decreases as the inverse square of slant range and as the cosine of zenith angle, assuming a Lambertian reflection process (Figures 10 a and b).

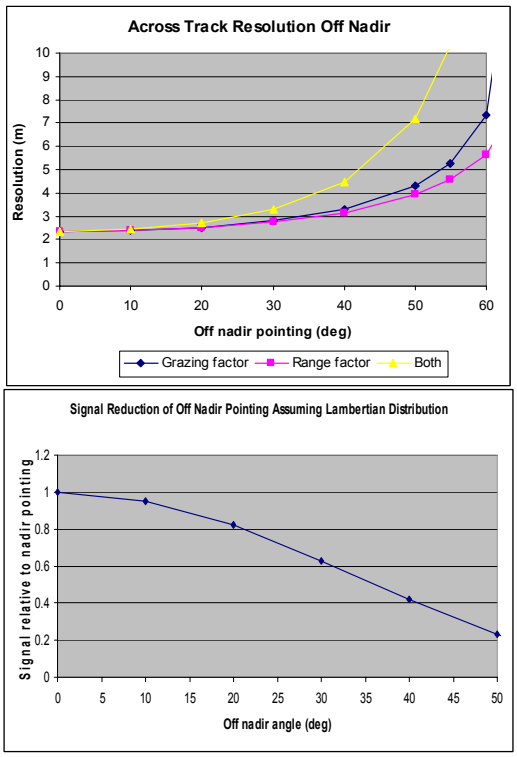

Figure 10 a and b

The utility of the imagery acquired reduces rapidly along with signal and resolution past the 30° point, and for these reasons, the maximum off nadir imaging with TopSat is nominally set to 30°, but could be extended giving different coverage statistics.

As altitude is increased, the required off nadir angle for a given ground swath reduces. For a 2, 3 or 4 satellite equispaced, coplanar constellation, the off nadir angle required for global coverage varies as given in Figure 11.

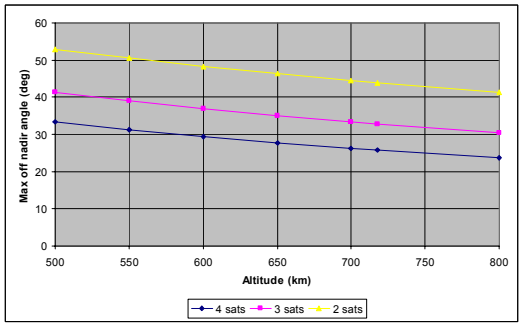

Figure 11 Field of Regard required for global coverage with a constellation

For a given acceptable off nadir imaging angle, the minimum possible orbital altitude for global coverage for 2, 3 and 4 satellites can be read off the graph. e.g. with 3 sats, and a 35 deg off nadir limit, altitudes can not be lower than 650km.

This figure does not include the effects of Earth curvature and so angles are slightly high. Correcting for curvature, figures for the repeat orbits are given below

Number of satellites in constellation	Altitude of repeat orbit (km)	Required off nadir imaging (deg)
4	561 (1 day repeat)	30.4
3	664 (3 day repeat)	33.9
2	719 (2 day repeat)	42.5

Table 1

4. Augmentations to Improve Imaging Opportunities

Two additions to the TopSat spacecraft are assessed which would lead to improvements in the coverage offered.

Propulsion

The TopSat satellite being built has no propulsion system. A constellation of such satellites would require limited propulsion in order to correct launcher orbit insertion errors and maintain orbital separation. A minimum implementation could

consist of a small cold gas system. e.g. 10kg of butane would give a total of around 60m/s velocity change (ΔV) during life. Inclusion of a propulsion system would require accommodation of the fuel tank, feed lines and thrusters, with resulting increased total mass

Allowing a total mass increase above the existing TopSat design (108kg actual , structure designed for 120kg including margin), and assuming only limited changes are required to accommodate the propulsion system elements, allows reasonable estimates of total propulsive capability available. If we start with a maximum total mass of 150kg, with a fuel mass limit of 25kg, the 17kg remainder needs to account for the fuel tank and other propulsion system components. The fuel tank should be no more than 20% of the fuel it contains, leaving 12kg for fuel lines, thrusters and spacecraft structure strengthening/enlargement. The significant increase in mass would mean that the spacecraft structure would need requalification, although the payload probably would not.

25kg of fuel on a 150kg small satellite may be ambitious, particularly in terms of volume accommodation, but such an assumption does allow us to form some estimates of available propulsive capability. If practical problems of accommodation were encountered, fuel mass reduction or total mass growth would obviously be required. For this analysis, 25kg fuel mass with 125kg dry mass is the starting assumption.

Figure 11 gives the fuel mass required against ΔV provided for a small satellite dry mass of 125kg, for

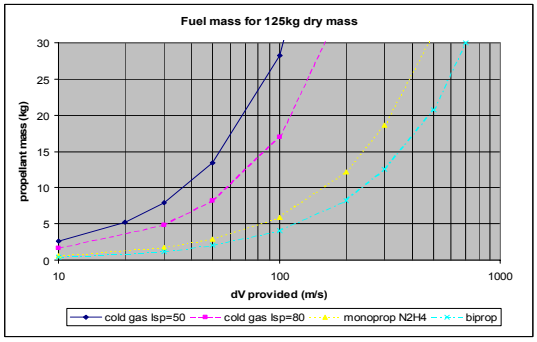

Figure 12 Fuel mass with different propellant options

a number of different propellants. Two Isp values for cold gas systems are given, 50s and 80s, with most existing cold gas systems sitting somewhere in between. Monopropellant hydrazine, Isp 220s, and a generic bipropellant, Isp 320s, are also shown. As can be seen, even with the lowest Isp cold gas system, 25kg of propellant gives a ΔV capability of 90m/s. With a monopropllent hydrazine propulsion system, ΔV capability would be 400m/s with a launch mass of 150kg. Bipropellant obviously gives an even higher ΔV result, although would require dual tanks and feed systems.

Lifetime ΔV capacity for an augmented 150kg BOL mass TopSat based system is taken to be between 90 and 400m/s, depending on the Isp achieved, be it with cold gas or more energetic system.

Multiple Images in One Pass

TopSat carries 4 (one redundant) reaction wheels in a tetrahedral configuration. The wheels are used for attitude control in Earth pointing and imaging modes, with an angular momentum capacity of 0.4Nms, and maximum torque of 5mNm.

The total time taken to perform an image is dominated by the time required to slew from nadir to near the imaging direction, and the time then taken to settle on to a smooth rate profile to allow accurate linear CCD imaging. A typical time from initial motion away from nadir to image completion for an off track target is expected to be around 2-3 minutes, depending on target position and the settling times achieved in practice.

At a ground rate of 6.9km/s (consistent with 600km altitude), the sub-satellite point travels 414km per minute. A minimum time for performing a second image of 2 minutes gives a minimum along track ground separation of 828km. This severely limits the number of images that can be taken in a single over-pass of an extended area of interest. For TopSat, the nominal case is no more than one image per orbit.

Two improvements to this timeline would be to increase the maximum slew rate and to optimise the settling time onto a smooth rate.

<u>Faster Slews</u>

Actuator torque capacity, rather than angular momentum capacity, limits slew rate increase, as the wheel speeds do not saturate in the time taken to slew. Using a high torque capacity wheel would result in quicker slews.

The Teldix RSI 04-25/60[1] has a 0.4Nms angular momentum capacity, but a maximum torque of 18mNm. Roughly speaking, this could reduce the time taken for slew by a factor of 3. The mass of this Teldix wheel is stated as <1.7kg, compared to the existing SSTL wheels 1.1kg. A set of 4 should add less than 2.4kg to the mass budget. The higher torque capability could be accommodated with almost no additional mass budget by the removal of the redundant wheel, if necessary.

An additional alternative for improved torque capacity would be small control moment gyros (CMG). SSTL and Bristol Aerospace both have small CMGs in development, although neither as yet are space qualified with operational experience, and so have not been included here as options.

Shorter Settling Time

After the initial slew towards the target orientation, the spacecraft sets up a constant rate slew for imaging. This needs to be performed with sufficient leeway to allow transients to decay before imaging commences. At present, this decay takes of order 30s, which is still short compared to typical times to slew towards the target. With bigger torque capability, the settling time would start to dominate the total imaging set-up time, and there would be greater incentive to optimise this parameter. It is estimated that the settling time could be reduced by a factor of 2 by an increase in gain values and controller adjustment.

Multiple Images

The result of both these changes would be to allow a second image less than 1 minute (maybe down to 30s) after a first image. This brings along track distance between images to under 400km (200km for 30s period).

However, a further departure from baseline TopSat operations is to image while forward and backward looking. The nominal TopSat imaging sequence involves pointing slightly ahead of sub-satellite at the beginning of imaging, and slightly behind at the end of imaging, with a zero pitch angle at the centre of imaging. There is scope to perform the entire imaging sequence offset either ahead or behind sub-satellite point (in a manner similar to that routinely performed by PROBA[2]). Resolution and signal strength would degrade as for any off nadir imaging, but for small angles this would not be significant. This would allow multiple images of the same area, or multiple images of a number of areas in one locality in one pass.

TopSat will be able to image the same area either on successive passes or on the same pass using this technique. A realistic reorientation time is around 2 minutes between favourable imaging orientations. Orbital distance moved in 2 minutes is around 950km, which would give a minimum angle between images of 70°. Using the benchmark that elevation accuracy from stereo imaging is of order 2x image resolution, digital elevation accuracy could be around 6m.

Multiple images of the same scene could also be collected by different satellites in a constellation. Two satellites with limited propulsion in a shared orbit could be drifted to close proximity for limited fuel cost, and then returned to their nominal separation. With close proximity the 2 satellites could perform stereo imaging. A SAR variant of TopSat is also under study; 2 such satellites in formation could perform interferometric and bistatic radar imaging.

5. Orbit Configurations

Repeat Ground track Orbits

Numerous repeat ground track sun-synchronous orbits exist between the altitudes of 500 and 800km. For small constellations of up to 4 satellites, ground tracks which repeat in 3 days or less are potentially of interest, and are listed in the following table.

Altitude (km)	Resonance	Repeat time
561	15 orbits per day	Daily
664	14+2/3 orbits per day	Every 3 days
719	14+1/2 orbits per day	Every 2 days

Table 2

A single satellite in a 561km altitude orbit will cover the same ground track every day. It consequently has imaging access only to areas near that ground track, but provides those areas with daily imaging opportunities, effectively trading off global coverage for more regular coverage.

An obvious possible application then, for an optical satellite with propulsion, is to be able to tune the ground track to desired areas of interest, allowing daily coverage but global access via orbit rephasing, accepting that there will necessarily be a delay if the orbit has to be reconfigured. Fuel estimates for such orbit reconfiguration in such an application are given in the following sections.

At 561km altitude, drag may be a concern, particularly around solar maximum. Using an approximate model of air density between solar max and min[3], a 3 year mission centred on solar max has a total ΔV to combat air drag of 97m/s, which reduces to 55 and 25m/s with 2 and 3 year offsets respectively. This drag value at 561km altitude repeat orbit is significant but not prohibitive for our proposed hydrazine system. For a cold gas system with Isp 50s, it does prevent a 3 year mission centred at solar maximum, but would be tolerable if offset by at least 2 years from solar maximum.

Resonant orbits are known to undergo secular perturbationary effects in addition to those for general LEO orbits, as a result of their repeat

geometry with the Earths's geopotential field. Tesseral harmonics, for instance, are not normally significant in orbit evolution in LEO, since perturbations tend to get averaged out. This would not be the case for a repeat ground track, and this effect would need to be explored in order to estimate orbit maintenance fuel requirements. Such requirements would not however be expected to be significant compared to fuel estimates for orbit reconfiguration produced below.

The other repeat orbits similarly have fixed ground tracks. For the 719km orbit for instance, the satellite passes over a point on its ground track every 2 days. With a maximum acceptable off nadir imaging angle of 30°, it would have access to approximately half the Earth's surface at equatorial latitudes, every 2 days. Again, the ground track could be moved by rephasing the orbit allowing global access. Having 2 satellites in such an orbit, separated by half an orbit would give global coverage every 2 days, again with maximum off nadir imaging of 30°.

Compare this orbit with a sun-synchronous nearby orbit at 700km or 750km. Total area covered in all 3 orbits is roughly the same since orbit velocity is roughly the same. While the 719km orbit repeats over the same ground track, the other 2 orbital ground tracks drift over the whole globe. For a random selection of imaging targets (and an off nadir maximum of around 30°), the 700 and 750km orbits will revisit each target approximately the same number of times in any given (long enough) period. The 719km orbit however will revisit half of these random targets twice as much as the 700/750 cases, and the other half of the targets not at all.

Positioning 2 satellites at 719km sun-synchronous, with sufficient propulsion capability to rephase the ground tracks numerous times, allows the 2 satellites to provide daily access to any given global position with small off nadir viewing angle, with each satellite visiting on alternate days. Additionally, the 2 ground tracks could be configured to give identical, or differing viewing angles of choice, on alternate days.

Fuel estimates for orbit reconfiguring are produced in the following sections.

Fuel costs of Orbit Initialisation

Assuming the satellite is capable of thruster actuation in any direction in inertial space, J2 induced orbit precession rate can be varied by any combination of changes to semi-major axis, inclination and eccentricity, although eccentricity effects are minor in comparison and hence are neglected. Alongside the nodal drift resulting from altitude change, there will be a further "along track" drift as a result of the time spent in the "drift orbit". The nominal repeat ground track depends on both the plane of the orbit and the position of the satellite within the orbit (anomaly). By spending a limited period in a drift orbit, when the satellite returns to its sun-synchronous orbit it will be in a different along track position to that it would be in had it not spent a period in the drift orbit. Ground track can be controlled by exactly this process as outlined in the next section.

Altitude changes could be achieved either by a single burn, giving an eccentric orbit, or by a double burn so circularising the drift orbit. Approximately the same semi-major axis change will result from both strategies, given the same overall fuel cost.

Orbit changes with 100m/s ΔV input, based on starting circular orbit at 600km, are:

	Orbit Change	Node drift rate °/day wrt sun	Node drift in 30 days (change in LTAN)
Semi-major axis change	188km	0.088	10.6 minutes
Inclination change	0.758°	0.095	11.4 minutes

Table 3

From this table it is seen that in order to change local node time of observations, it is slightly more efficient to use fuel to change the inclination of the orbit than it is to change the altitude. In order to achieve a shift in local node time of 1 hour, using 100m/s to change inclination, requires a wait of 158 days. To return to sun synchronous orbit would then require a further ΔV input of 100m/s. The initial drift orbit could be set up by the launch vehicle.

A delay of 158 days is not practical from a satellite operations point of view. If we limit the maximum delay permitted for the satellite to take up its operational orbit after launch to 60 days, then only 23 minutes can be achieved with 100m/s ΔV. A one hour change requires 263m/s. Both ΔV numbers quoted are for a single orbit change only, so unless the satellite is injected into its drift orbit, the total cost would be twice this to change orbit and then change back again.

It is concluded that even assuming a bipropellant level of Isp, it is not practical for the local node time of the satellite orbit to be changed by hours, using on-board fuel, without greatly adapting the satellite and carrying a large mass fraction of fuel. Injection of a constellation into a number of planes may be a possible with re-ignition of the final stage of the launcher, but this is not considered further

here. However, changes of plane of less than an hour can be accommodated within a ΔV budget of a few 100m/s.

Fuel costs of Orbit Reconfiguration

Two satellites in the same orbit at different along track positions will obviously have different ground tracks. Changing the orbit semi-major axis results in a change in orbit period, and hence when the orbit returns to a sun-synchronous altitude, its position in the orbit is different compared to where it would have been had the orbit not been altered at all.

A 100km altitude shift from 600km produces a change in orbital period of 125s, giving a ground track motion of 7.7° in longitude over 1 day. A 100km altitude change has a total ΔV cost (to also return to original altitude) of 109m/s. The daily orbit plane drift with respect to the sun would be only 0.05°, compared to the daily ground track drift of 7.7° resulting from differing orbital period.

The drift in ground track becomes significant when we start talking about repeat ground tracks. If we consider a one day repeat ground track at 561km altitude, then for successive orbits, ground tracks are separated at the equator crossing by 2672km, or 24° at the Earth's centre. For such an orbit, a single satellite passes over the same parts of the Earth every day at the same time. This is obviously a good thing if the imaging target happens to lie near the ground track, as it allows daily revisit with only a single satellite.

By reconfiguring such an orbit, it would be possible to ensure that any position on the globe can be positioned directly on the satellite ground track. The largest reconfiguration necessary for a 561km one day repeat orbit is 2672/2=1336km in longitude at the equator, or 12° at the Earth's surface. This would be achieved in 10 days by a 15.6km altitude shift, giving 1.2° ground track motion per day. It would cost a total of 17m/s. The same rephasing could be achieved in 20days with 8.5m/s, and 30days with only 5.7m/s. The nodal drift during this time would be only 0.3 minutes.

Similar maximum ground track reconfiguration angles for the 2 and 3 day repeat orbits are 6.2° and 4.1° respectively. Consequently, the maximum rephasing fuel costs are reduced by factors of 1.9 and 2.9 respectively, to give 30day rephasing using 3m/s for the 719km case, and 2m/s for the 664km case.

It is also worth noting that the average rephasing required for randomly distributed targets would be half of these values to position ground track over the target position, and less than that to bring the target position to only a reduced off nadir position.

The table below gives approximate ΔV numbers for the mean ground track reconfiguration required at 561, 664 and 719km.

	One day repeat 561km Mean ΔV cost (m/s)	Two day repeat 719km Mean ΔV cost (m/s)	Three day repeat 664km Mean ΔV cost (m/s)
10 day rephasing	8.5	4.5	2.9
30 day rephasing	2.8	1.5	1.0

Table 4 Reconfiguration ΔV costs allowing 2 timescales for manoeuvre

A ΔV budget of 90m/s, the lowest resulting from cold gas Isp of only 50s, allows numerous rephasings for all 3 options. Fuel requirements for this strategy is not a problem with the assumptions taken earlier in the paper. Even a halving of the fuel mass allocation (to 12.5kg) would allow a sufficient number of rephasings for this approach to be useful.

6. Conclusions and Attractive Coverage and Constellation Options

The coverage options available with a TopSat like satellite can be significantly expanded by both the addition of a propulsion system, and allowing quicker reorientation.

Positioning the satellite in a repeat ground track orbit, with sufficient propulsion to rephase the ground track of the orbit numerous times, allows improvement in revisit while still allowing global coverage. Typical rephasing fuel costs, allowing 1 month for manoeuvre, are as low as 2.8m/s for the 561km one day repeat altitude orbit, and 1m/s for the 3 day repeat 664km orbit.

Fuel costs to change sun-synchronous orbital plane by more than a few tens of minutes local time are prohibitive.

The advantages of repeat ground track constellations can be summarised as:

- improved coverage of some areas at the expense of other areas
- tunable off nadir observation angle with low fuel cost
- repeat observation geometry with no fuel cost.

A single TopSat like satellite at the 561km daily repeat orbit appears a very attractive proposition, provided the fuel requirement to combat drag is not excessive (initial estimates indicate that cold gas

propulsion would be sufficient provided the mission is not at solar maximum, when hydrazine would be required). This would allow daily revisit to an area of interest, while allowing orbit rephasing to provide global access. Rephasing fuel costs are low for rephasing times of a few days or more, typically 2.8m/s allowing 30 days for manoeuvre. Resolution of the TopSat camera at this altitude would be 2.3m.

Installing more than one satellite at 561km altitude would increase the amount of the Earth's surface which could be accessed simultaneously. With four coplanar satellites, global coverage would be available daily. The advantage of having a four satellite constellation in this repeat orbit is that the constellation could be reconfigured to similar repeating ground tracks, giving 4 revisits to an area of interest each day. With the existing TopSat attitude control this would provide 4 images of 2.3m resolution over an extended area of interest every day. With an upgraded attitude control torque capability, this number could be increased by a factor of 2 or more, giving more than 8 images per day. A revisit plot for such a constellation is given below.

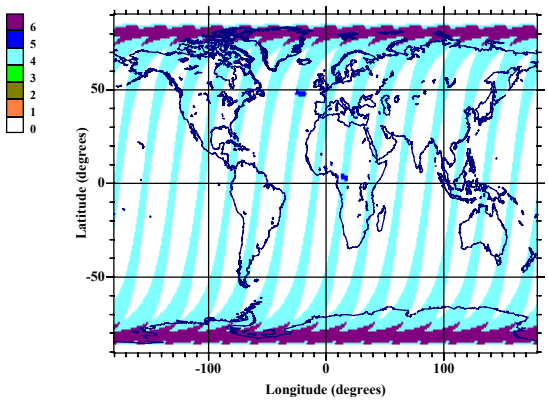

Figure 13 A 4 satellite constellation at 561km (numbers give visits per day)

Two satellites positioned 180° apart in the 2 day repeat orbit at 719km allows daily coverage at a maximum off nadir angle of 42.5°. This angle is bigger than is usually acceptable for reasons of resolution and radiometry. However, with the TopSat camera the resolution would be 3m, and signal boosted by the available TDI manoeuvre. In addition, by rephasing the ground track, the target off nadir angle can be reduced to zero over a period of 10 days, using only 4.5m/s per satellite. Both satellites could be rephased to give 2 revisits per day. A ΔV budget of only 45m/s would allow 10 such rephasings over mission life, requiring only around 7kg of cold gas propellant.

Similar options are available for the 3 day repeat orbit at 664km.

7. ACKNOWLEDGEMENTS

TopSat is funded by the UK Ministry of Defence and the British National Space Centre (BNSC) Mosaic Small Satellite Initiative. TopSat is a collaborative programme between QinetiQ, SSTL, RAL and Infoterra. The authors wish to thank all the collaborative partners for their provision of images and information on respective parts of the mission.

8. REFERENCES

1. http://www.teldix.com/index_e.htm

2. "PROBA Attitude Control and Guidance In-Orbit Performance", P Van den Braembussche et al, ESAGNC Conference, Oct 2002.

3. "Satellites Orbits in an Atmosphere", D King-Hele, Blackie, 1987.