Design of the Local Ionospheric Measurements Satellite

Valérie F. Mistoco, Robert D. Siegel, Brendan S. Surrusco, and Erika Mendoza

Communications and Space Sciences Laboratory, Electrical Engineering Department
Aerospace Engineering Department

The Pennsylvania State University

Advisor: Sven G. Bilén

Abstract: The Local Ionospheric Measurements Satellite (LionSat) is an ionospheric investigation nanosatellite that is being developed by an interdisciplinary team of students at The Pennsylvania State University. The scientific goal is to study the local ambient and perturbed plasma environments surrounding the satellite as well as ram and wake effects as it traverses through its orbit. This project engages students from various engineering and non-technical backgrounds in the design, fabrication, testing, and flight phases. LionSat will employ a combination of new technologies, such as the Hybrid Plasma Probe and a Miniature Radio Frequency Ion Thruster, both currently under development. LionSat will collect data in a variety of geophysically interesting locations in low Earth orbit and correlate them to the ram/wake measurements.

1 Introduction

The Local Ionospheric Measurements Satellite (LionSat) mission was recently selected as a participant in the University Nanosat-3 (NS-3) program, which is a joint program between the American Institute of Aeronautics and Astronautics (AIAA), the National Aeronautics and Space Administration Goddard Space Flight Center (NASA GSFC), the Air Force Office of Scientific Research (AFOSR), and the Air Force Research Laboratory Space Vehicles Directorate (AFRL/VS). The objectives of the NS-3 program are to educate and train the future workforce through a national student satellite design and fabrication competition and to enable small satellite research and development, payload development, integration, and flight test. Also important to the program is the ability to fly new technologies to test them in space [1].

The research interest areas for LionSat are focused on developing technologies important to small satellites, both commercially and for the government. In order to meet the tight mass and size requirements of the NS-3 Program, LionSat is a "sciencecraft" with science experiments and bus fully integrated. The scientific and engineering goals do not require three-axis stabilization of the platform—LionSat is a spinner that will "roll along" the orbit with the spin axis perpendicular to the orbit plane. It will explore the ram/wake structure of a small spacecraft via plasma probes located on booms that go in and out of the wake as it "rolls" along the orbit. LionSat will obtain ambient measurements of the undisturbed plasma environment and correlate them to the ram/wake measurements. These probes will also operate in different modes to investigate a broad range of geophysical conditions that occur on various temporal and spatial scales. The spin of the LionSat spacecraft will be maintained by a pair of Miniature RF Ion Thrusters, which will be the first flight test of this spacecraft propulsion technology.

LionSat is a multi-disciplinary space systems project involving several departments of The Pennsylvania State University, including electrical, aerospace, and mechanical engineering departments. The project also includes students from the College of Science and the College of Education. The Communications and Space Sciences Laboratory (CSSL), located on campus, is serving as the coordination center for the project. The research conducted by the CSSL is focused on electromagnetics, atmospheric, and ionospheric properties. As a result, this present effort is well integrated with laboratory efforts to understand the ionosphere [2].

Although LionSat's scientific goals are important, the educational objectives are the driving force for the project. Consequently, student involvement in all aspects and at every level is a priority. This project is designed and managed by students with assistance provided by different faculty members assuming mentoring and advising roles.

Figure 1 gives an overview of the LionSat project timeline and the dates of milestones. The project began in January 2003 and progressed through a System

Concept Review with the sponsors in April 2003. During the summer of 2003, LionSat is currently in its preliminary design phase, with an expected Preliminary Design Review to occur in August 2003. The program will then continue until early 2005, at which time there will be a selection made for flight from the thirteen competing universities. At least one satellite will be chosen for flight, qualified, and then launched either from the space shuttle or on board other available rocket space.

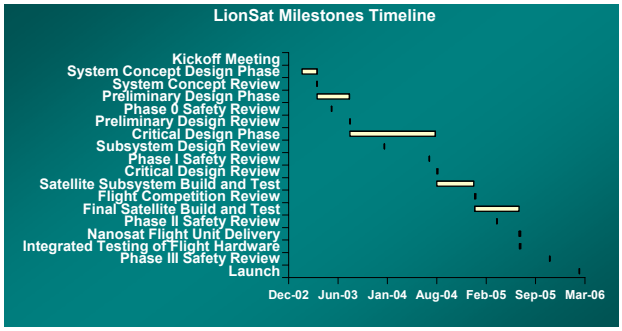

Figure 1 LionSat project schedule

To drive the design, a set of documents have been created. These include a Requirements Flow-Down document, an Organizational Documentation Database, etc. Also, experts in engineering areas, such as faculty from the University, industry professionals and government civil servants act as mentors and can provide guidance and proper technical oversight.

2 Goals and Approaches

2.1 LionSat Experiment Overview

LionSat will measure and map the plasma medium surrounding the spacecraft. Using an innovative multi-mode sensor called the Hybrid Plasma Probe (HPP), currently being developed at the CSSL [3], LionSat will collect data in the ram, wake, and undisturbed regions surrounding the satellite. It will also test another device: a pair of Miniature Radio Frequency (RF) Ion Thrusters, which are also currently under development at Penn State. This thruster will be used to assist in the spin up of the satellite shortly after it is deployed.

2.2 Mission Goals and Mission Success Criteria

The first primary mission objective is mapping the plasma environment around the satellite. The second primary objective is testing on orbit the miniature RF ion thruster. A secondary mission objective is to test the use of Internet Protocol (IP) for communications.

Mapping throughout the plasma regions must be resolved to 30° ± 5° of rotation of the satellite about the spin axis. The minimum success criteria states that plasma density and temperature measurements should be made in the three regions of interest and the data must be returned to the ground for at least three geophysically meaningful campaigns. Also, the miniature RF ion thruster must demonstrate a minimum of one hour of continuous operation and a measurable change in the satellite rotation rate. Although not part of the minimum success criteria, we would like to see the RF thruster handle a larger portion of the spin-up of the satellite. It is desirable that as much data as possible is collected and returned to the ground using the HPP and IP techniques.

2.3 Educational Goals

One of the main goals of this project, also emphasized by the Nanosat program sponsors, is the educational aspect. The division of work in the satellite's development allows students to interface directly with technical aspects of a real-life project. This includes the design, management, and communication of subsystem work, as well as integration efforts between subsystems. Another major aspect of the educational effort of the LionSat team is public outreach. This is why we are participating in different outreach activities and exhibitions such as the annual Penn State Engineering Open House, Space Day at Penn State University, and presentations at high schools.

Student members of the LionSat team also have the possibility to take classes directly linked to the project. These classes consist of senior design courses, first-year seminars, and independent study courses within the electrical and aerospace engineering departments. In these courses, students perform trade studies, manage the project, design subsystems, give presentations, and also aid in CAD development.

2.4 Approaches

Our team has chosen to employ a top–down approach to the design of LionSat. This large task has been broken into eleven subsystems, which include: System Integration, Guidance Navigation and Control, Power, GPS, Command and Data Handling, Structures and Launch Vehicle, Ground Control, Communications, Thermal, and Propulsion. Each subsystem typically has 4 to 6 students in it with a leader responsible for meeting safety and design requirements and for communicating to the System Integration team, which manages the project. "All-hands" meetings are held approximately biweekly to keep all teams informed of the progress of other teams. A formal documentation process is also in place to make sure critical information is not lost as the inevitable change over of students takes place.

Since the type of launch vehicle to be used remains an unknown—although the Space Shuttle is

baselined—the design of LionSat is further complicated and requires a certain margin of flexibility. Yet, by meeting the toughest restrictions between the Space Shuttle and an expendable rocket (another likely vehicle candidate is the Minotaur), LionSat should be qualified to fly on either platform.

During its launch phase, the satellite will be confined in a canister called an Internal Cargo Unit (ICU), which consists of a two-piece aluminum canister. The satellite will be mounted in one half of the canister. A schematic of the ICU is shown in Figure 2 [4].

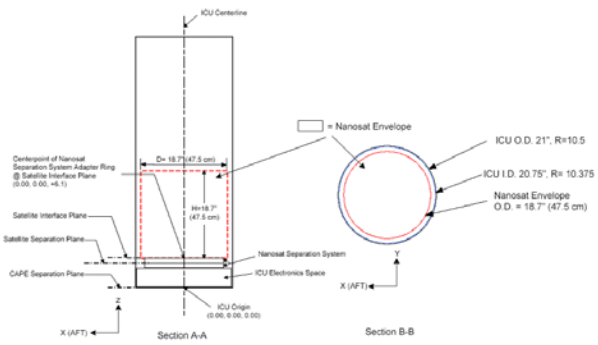

Figure 2 The Internal Cargo Unit layout [4]

The Nanosat Separation System (NSS), located in one half of the ICU, is mounted to the satellite Separation Plane (SIP) at one end and to the Canister Separation plane at the other end. This connection is made through a Lightband® ring designed by Planetary Systems Corporation.

Figure 3 Lightband ® Separation System [5]

3 Spacecraft Preliminary Design

3.1 Structural Approach and Design

LionSat's structure must meet the many requirements imposed by the Nanosat User's Guide, the launch vehicle, and the satellite's subsystems. The preliminary design consists of an octagonal shape with a cross-section that must fit within the static envelope of 47.5 cm in both diameter and height, see Figure 2. The upper mass limit has been defined as 25 kg and the center of gravity must stay within 0.635 cm from the ICU centerline and 30.5 cm from the SIP [6].

The preliminary design of the satellite consists of an eight-side-panels structure with aluminum end-caps (Figure 4). This octagonal shape will support the solar cells, which will cover almost the entire outer surface of the satellite.

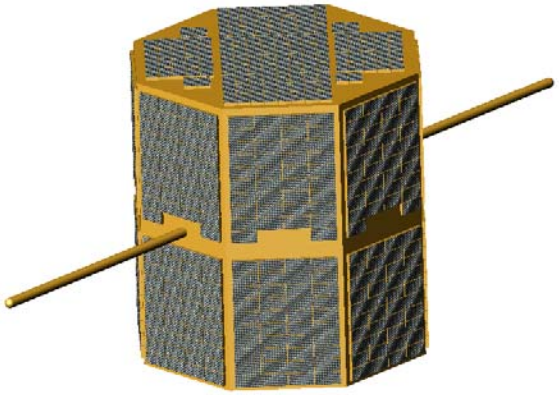

Figure 4 Preliminary LionSat structural design showing booms in deployed configuration

Since the entire satellite must fit within the static envelope defined above, the dimensions of the basic octagonal structure have been set to 47 cm in diameter and 46.5 cm in height. Thus, the undeployed booms supporting the plasma probes have a margin of 2 cm to protrude from the main structure in their stowed configuration. A more detailed description of the booms is provided in Section 4 of this paper.

Due to the flight history, corrosion and fracture characteristics, and strength-per-weight ratio, 6061–T6 aluminum will be used to build the structure. Isogrid and "egg crate" milling techniques will be used to save weight.

3.2 Launch Vehicle

The two launch vehicles under consideration for the launch and deployment of LionSat are the Space Shuttle and Orbital Science Corporation's Minotaur rocket.

If launched by the Space Shuttle, the Internal Cargo Unit will contain the satellite, as described above, and will provide a non-pyrotechnic low shock separation system. This launch separation interface will has been designed to meet the stringent design and safety requirements of the Shuttle.

3.3 Spacecraft Architecture

Preliminary mass allocations with margin have been defined for the various subsystems to ensure that the overall mass falls below 25 kg. This initial partition of mass was made using recommendations found in

Space Mission Analysis and Design. [7], but further refined to meets the needs of the LionSat design. Table 1 below gives the mass and placement of the different components on the structure. A 4.4-kg margin (18%) is reserved.

Table 1 LionSat component masses and locations

Component	Mass (kg)	Location
Solar Cells	3	Entire Outer Perimeter
Hybrid Plasma Probe (2)	2	Boom Mounted
Ion Thrusters (2)	3	On Outer Panels
Transmitter	0.3	TBD
Command Receiver	0.15	TBD
Antennas	1	TBD
Magnetometers	0.26	TBD
Processor & Memory	0.9	TBD
Batteries	3.5	TBD
Structure	5.25	
Wiring & Regulators	0.5	Interior
Lighband Clamp Ring	0.82	Bottom Surface
Total	**20.6**	
Margin	4.4	

3.4 Thermal Control

The objective of thermal control is to maintain all the components of the satellite within their allowed temperature limits during all the mission phases. Ideally, this should be done using the minimum amount of resources, so passive control is much more favorable than active control.

The first step of the design process is to use STK Toolkit to predict the temperature of the spacecraft and the input parameters for this calculation are the surface emissivities, solar influxes, Earth albedo, and IR influxes from the Earth. The result of this "single node" evaluation is used in the second step of the thermal design process. The second step will consist of determining the different requirements and constraints by identifying the temperature limits of the different components and by estimating the overall electrical power dissipation. Then a simple (e.g., 20 node) thermal model is used to determine the temperature distribution within the structure.

4 The Hybrid Plasma Probe

4.1 Description

The Hybrid Plasma Probe (HPP) instrument is being designed as a synergetic combination of several different plasma probes, where electronic circuitry, such as power and control, and sensors to measure plasma parameters are shared among the probes. This provides a suite of techniques to analyze ionospheric plasma while minimizing resources. The HPP on board LionSat will be a combination of two Langmuir probe (LP) types, a plasma frequency probe (PFP), and a fast temperature probe (FTP). Parameters that the HPP will be able to measure include electron and ion density, electron and ion temperature, and spacecraft and plasma potentials.

The HPP system will have four sensors on two booms that will extend from LionSat by telescoping after deployment. The end of each boom will have a sensor to probe ambient plasma, while the middle of the boom will have a sensor that will rotate through the ram and wake as shown in Figure 4.

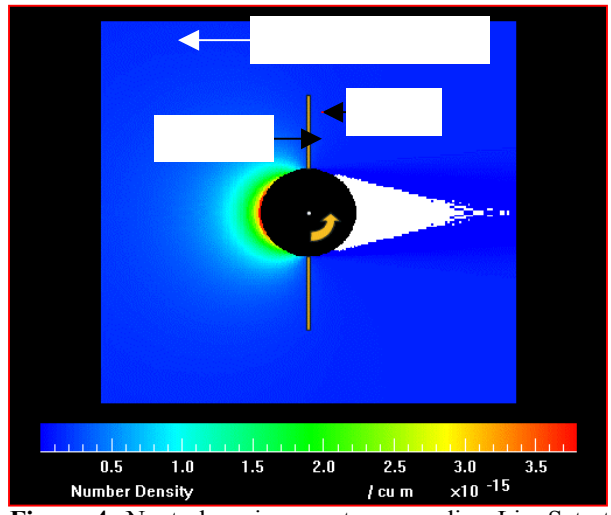

Figure 4 Neutral environment surrounding LionSat at 400 km and 7.6 km/s satellite velocity. The orbital plane coincides with the plane of the image. Boom middles rotate through ram and wake while ends remain in ambient environment.

4.2 Langmuir Probe Theory

Langmuir probes are typically of two types: the swept-bias Langmuir Probe (SBLP) and the fixed-bias Langmuir Probe (FBLP). Both forms function by placing a voltage on a metallic sensor immersed in the plasma and measuring the resultant current. If the applied voltage is negative, positive ions are attracted to the probe, and if this voltage is positive, electrons are attracted. At intermediate values of applied voltage, both charges are collected because the electrons are not fully repelled. Thus, three regions exist in a volt–ampere curve: ion saturation, electron retardation, and electron saturation, where the saturation regions collect only one species and the retardation region collects both (Figure 5).

The SBLP works by sampling enough points on this I–V curve to be able to reconstruct the full curve. The observed ion saturation current provides an absolute measurement of ion density (n_i); meanwhile, the electron saturation current yields absolute electron density (n_e). The slope of the electron retardation region gives an estimate of electron temperature (T_e), and the change of curvature point on the I–V curve just

below the electron saturation region identifies the plasma potential.

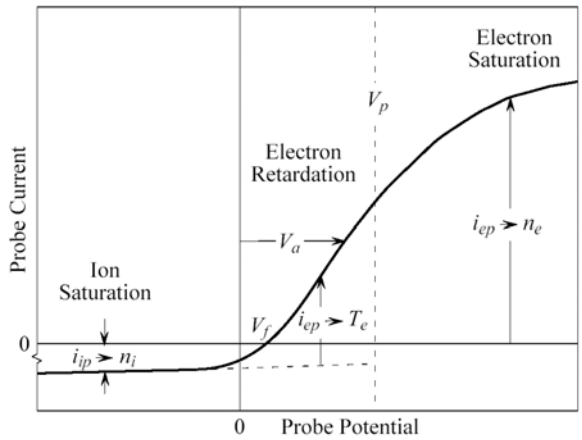

Figure 5 A typical I–V curve for a swept-bias Langmuir probe showing the ion saturation, electron retardation, and electron saturation regions [after Ref. 8].

So, the SBLP technique is quite powerful, but its major drawback is that it needs time to collect enough sample points (usually 64 or more) to construct the I–V curve. The FBLP technique is less powerful but is much quicker. In this mode, the sensor voltage is fixed in either the electron or ion saturation region; the changes in the resultant current are then recorded to provide a relative measurement of changes in electron or ion density. For the FBLP mode, each sample produces data, producing a much higher time resolution instrument from the same equipment used to implement the SBLP mode.

4.3 Plasma Frequency Probe Theory

Another high temporal resolution instrument is the plasma frequency probe, which works by tracking the upper hybrid frequency. The plasma frequency, ω_{pe}, is defined as [9]

$$\omega_{pe} = \sqrt{\frac{n_e q^2}{\varepsilon_0 m_e}}, \tag{1}$$

where n_e is electron density, q is electron charge, ε_0 is the permittivity of free space, and m_e is electron mass. The frequency for electron cyclotron oscillations, ω_{ce}, is given as by [9]

$$\omega_{ce} = \frac{qB_0}{m_e}, \tag{2}$$

where B_0 represents the magnitude of the magnetic field at the surface boundary of the plasma. The resulting upper hybrid frequency, ω_{uh}, is given by

$$\omega_{uh}^2 = \omega_{pe}^2 + \omega_{ce}^2, \tag{3}$$

which is typically in the range of 1 to 20 MHz in the ionosphere.

The plasma frequency probe finds this ω_{uh} resonance frequency using the fact that the driving point impedance of the probe immersed in the palsma looks capacitive below ω_{uh} and inductive above ω_{uh} as shown in Figure 6. So by outputting an RF frequency near ω_{uh} and looking at the phase difference between the output voltage and resulting current, one can tune the frequency until the phase difference is zero and $\omega = \omega_{uh}$.

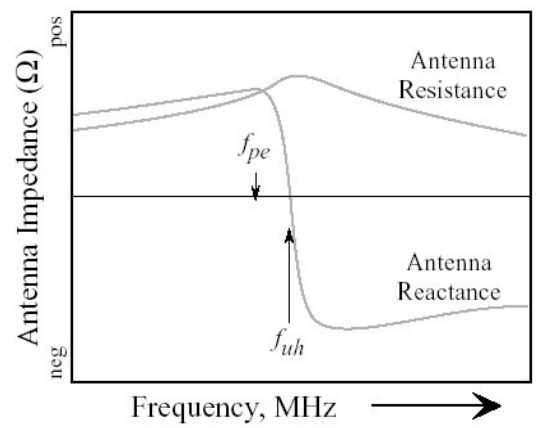

Figure 6 Sensor head impedance for the plasma frequency probe as a function of applied frequency [after Ref. 10]

Once the upper hybrid frequency is found, an absolute measurement of electron density can be determined via Eqn. (3) if the magnitude of the external magnetic field is known. This information could be extracted from an on-board magnetometer or by using IGRF models [11]. The result is often an error of only 1–2% versus a much larger 10–20% when using SBLP curves. Also, the PFP is less sensitive to the spacecraft potential but precautions must be taken to be certain that the RF signal is compatible with the other instruments on the spacecraft.

4.4 Experimental Process

There is a plasma sheath surrounding the spacecraft due to the plasma particles responding to the perturbing effect of the spacecraft. The sheath distance is proportional to a few Debye lengths (λ_D), where λ_D is defined as

$$\lambda_D = \sqrt{\frac{\varepsilon_0 T_e}{n_e q^2}}. \tag{4}$$

At the 400-km altitude where LionSat will be in orbit, the Debye length is less than 10 cm. So, by placing

sensors on booms more than 10 cm away from the spacecraft, sheath effects are minimized but ram/wake effects can still be observed. The sensors on the ends of booms will be 30 cm away from the spacecraft to be out of the sheath region and in the ambient plasma.

5 Miniature RF Ion Thruster

The miniature RF ion thruster is currently being developed at Penn State. It will be mainly used to maintain the satellite spin rate.

The process of generating thrust in an ion thruster consists of two steps. The propellant is first ionized and then the thrust is generated by acceleration of the electrically charged particles by static electric fields. A radio-frequency ion thruster is operated without a hot cathode inside the thruster's ionization section. Such a RF thruster system is currently flying on the European satellite ARTEMIS [12], which is a European satellite. In this type of thruster, the ionization chamber is made of an insulating material and surrounded by an RF coil. When energized with RF power, the coil induces an axial magnetic field and by Faraday's Law, a circular electric field is established. Electrons gain energy for impact ionization in this electric field and once the ionization process begins, a self-sustaining plasma discharge is formed. It should be noted that physics behind this discharge is different than that of microwave ECR (electron cyclotron resonance) ion thrusters [13].

One of the benefits of an RF ion thruster is that it can make fast (on the order of milliseconds) changes in thrust level by simply changing the applied RF power level. The mass flow can be subsequently changed until it reaches an optimum value. The RF thruster requires acceleration grids and a neutralizer such as a hollow cathode.

5.1 Feasibility Testing

A one-centimeter diameter ion thruster using RF ionization and xenon propellant has been fabricated and tested at Penn State. The one-centimeter-long ionization chamber is surrounded externally by a coil through which the RF energy is transmitted. Thus, the coil does not come into contact with the high-temperature plasma. Xenon propellant plasmas at pressures typical of those found in standard electron-bombardment ion thrusters can be sustained with as little as 3 W of RF power at a frequency of 13.56 MHz. Figure 7 shows the one-centimeter diameter RF ionization chamber operating in CSSL's vacuum chamber.

The ion thruster under development is a complete 3-grid ion thruster for operation at power levels on the order of ten watts. A diagram of the system under-development is shown in Figure 8. The overall system will consist of a gas reservoir with flow controller feeding to the ionization chamber as well as the neutralizer. An RF source with matching network will excite a discharge in a ceramic or boron ionization chamber. Ions will be accelerated out the end via a three-grid system with static potential maintained by a high voltage source.

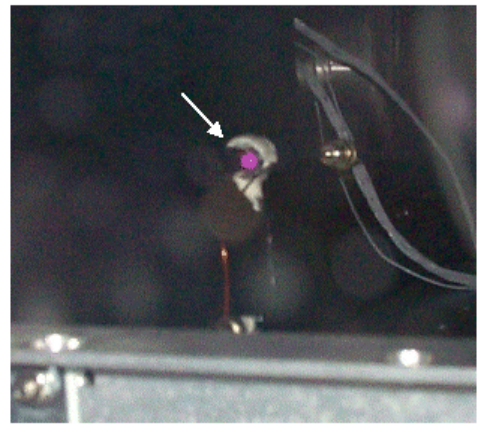

Figure 7 Ionization chamber of miniature RF ion thruster undergoing testing in the CSSL vacuum

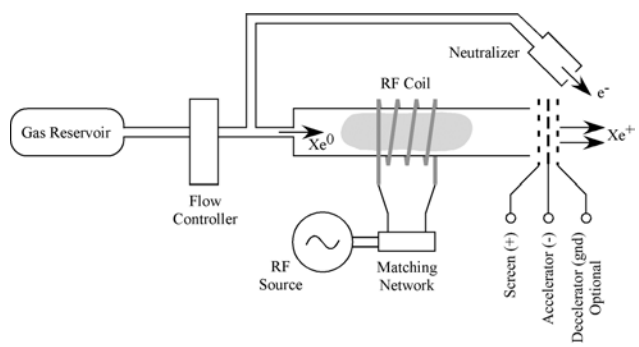

Figure 8: System diagram of the low-power, miniature RF ion thruster system

Chemically milled accelerating grids are located at the downstream end of the ionization chamber. Thrust levels on the order of 0.6 mN at a specific impulse of 3800 seconds are estimated to be obtainable with 12 W of total input power. Estimates for ion current flow are on the order of 12 mA. Highly efficient miniature solid-state RF sources are readily available and from a number of vendors as well as matching networks, although some more design effort will be required to the make matching automatic.

6 Guidance, Navigation, and Control

In order to meet the mission requirements of LionSat, there are various orbital and attitude parameters that must be met and maintained. The available power, orbital lifetime of the satellite, launch

from shuttle, and plans to pass over the Arecibo radar antenna all drive the orbital parameters of the mission. We desire passes over Arecibo to permit comparisons of the probe measurements to those made by the ground station. Various methods for attitude control and orbit determination have also been examined. Estimates were made based on the assumption that the ground station will be at Penn State. In Figure 9, a preliminary orbit model developed on Analytical Graphics' Satellite Tool Kit (STK) is displayed.

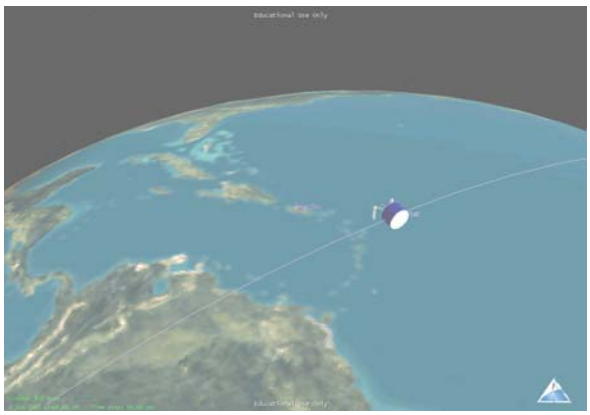

Figure 9 Notional LionSat overpass of Arecibo for correlation of plasma density measurement (from STK)

6.1 Requirements

If the launch vehicle is the Space Shuttle, the initial inclination of the orbit will be approximately 51.7 degrees due to the orbit of the International Space Station (ISS). If the Minotaur is the launch vehicle, the initial inclination is unknown. This is because the inclination depends on the primary payload of the Minotaur during launch. A pointing knowledge of 5 to 10 degrees is also required for the scientific payload to acquire the necessary data. In addition, a Global Positioning System (GPS) receiver will be on board to provide data on the current position of LionSat. The mission altitude will be between 300 and 400 km.

6.2 Disturbance Torques

The primary source of disturbance torques for LionSat is that of the Earth's magnetic field on the satellite. Based on approximations from Ref. [7] of the magnetic field, gravity gradient, solar radiation, and aerodynamic drag, Table 2 shows the expected torques that will be generated. These values are subject to change as the orbital parameters of LionSat are more fully specified.

Table 2 Calculated disturbance torques on LionSat

Disturbance	Torques (μN-m)
Gravity Gradient	0.0072
Magnetic Field	53.4569
Solar Radiation	1.7871
Aerodynamic Drag	0.0156

6.3 Attitude Control

The ideal shape of the satellite in terms of attitude control is that of an oblate spinner. Trade studies included an analysis that took into account the simplicity, weight, power requirements, orbit lifetime, science requirements, and cost of various attitude control methods. These methods included making LionSat a prolate spinner, oblate spinner, gravity gradient spinner, and dual spinner. In order to allow LionSat to be an oblate spinner as required by the science mission, modifications to the inertia matrix must be made by the arrangement of internal components, placement of booms, and analysis of the ideal fuel distribution plan among thrusters.

For active attitude control, magnetic torquers and cold gas thrusters were considered. The RF ion thruster was not considered as a primary means of attitude control due to its high power requirement and the size of LionSat's precession of the ascending node. The RF ion thruster will primarily be used for spin maintenance. A magnetometer (also used for scientific data collection) will be used to provide attitude determination and the use of sun and horizon sensors are also currently under consideration. These sensors will interface with the onboard command and data handling system to control the cold gas thruster.

Cold gas thrusters were chosen for primary attitude control due to their simplicity and ability to use the same xenon gas that is used for the RF ion thruster. The amount of thrust generated from cold gas thrusters is also significantly higher than that of the RF ion thruster and can be varied to meet spin-rate requirements. Four fixed cold-gas thrusters, as opposed to 2 gimbaled and 2 four-way fixed thrusters, were chosen for LionSat. This decision was based on design simplicity, cost, weight, and the ability to control attitude.

6.4 Orbit Determination

The GPS unit will provide data about LionSat's orbit throughout the mission. As a preliminary step in calculating the orbit lifetime of the satellite a graph of an earth orbit lifetime for circular orbits from Ref. [7] was used. In addition, it is important to note that there is currently no plan for actively maintaining our orbit. LionSat is expected to experience natural orbit decay. Depending on the altitude of deployment, the orbit is expected to last up to 275 days.

7 Command and Data Handling

The microprocessor that will be used on board is a StrongArm SA-1110 from Intel. This processor is further described below in Section 8.4.

7.1 Total Data Rate

The roll rate of the satellite will be approximately 10 rpm, which gives an average of 14,400 rolls per day. Since 12 samples will be collected per roll and sensor head, 691,200 samples will be collected per day by the 4 sensor heads.

We will be employing the concept of functional objectives (FOs) in order to capture various datasets. A set of FOs will be defined prior to launch and timelined. After capture of primary FOs, we will be able to upload new FOs to explore "targets of opportunity" identified by analysis of the primary FO datasets.

Assuming one functional objective is achieved per day, the required data quantity to download each day is 11 MB/day (Table 3).

Table 3: Estimated data rates for LionSat, percentage of days

FO	SBFP	SBLP	PFP	FTP	FBLP	Portion of day	MB/ day
1	5%	10%	40%	10%	40%	15%	11.0
2	100	0	0	0	0	1.5	10.6
3	0	20	40	10	40	15	11.0
4	0	2.5	0	0	97.5	100	10.2

The GPS, which is needed to determine the orbital position and absolute time, requires 20 bytes per sample. Considering that the GPS will collect 0.1 samples per second, the total data rate per day is 0.17 MB. The magnetometer used to determine the attitude of the spacecraft needs 1.04 MB/day to retrieve 172,800 samples a day at a rate of 6 bytes per sample. In addition to the mission data, the housekeeping data has to be downloaded as well. The housekeeping data include information from the three horizons sensors, the battery's current temperature and state of charge, LionSat's Xenon tank pressure, temperatures, and other status conditions of satellite subsystems. This housekeeping data requires a fairly low data rate, 1.05 MB a day. Consequently, the total data rate required to download all this data is 13.3 MB per day.

7.2 LionSat Transmission Link Characteristics and Data Rate

The LionSat spacecraft will perform approximately six passages a day over the Penn State Ground Station (Figure 10). For each passage, a reacquisition of the satellite is required.

The maximum path length between Penn State's ground station and the satellite depends on the elevation of the spacecraft. This distance will be about 1470 to 1840 km as calculated for a 10º and a 5º minimum elevation angle. The propagation time for these transmission paths is calculated to be around 4.9 to 6.1 ms, respectively.

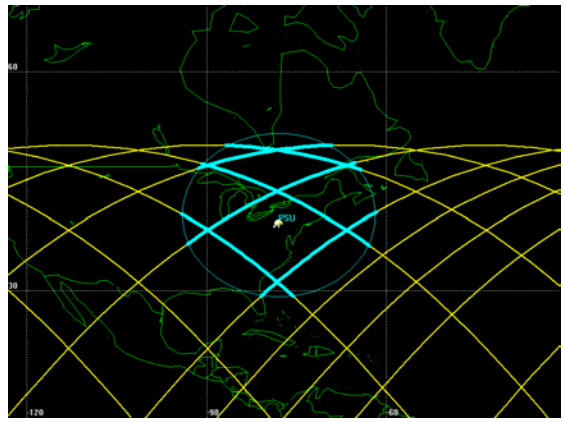

Figure 10 Notional LionSat overpass of Penn State Ground Station (from STK)

LionSat will initialize contact with the ground station using GPS and ephemeris data. If no answer is received from the ground station, the spacecraft will broadcast in the blind. Table 4 below shows the influence of the satellite inclination elevation on the data rate of information transmitted.

Table 4 Transmission datarate calculations

	10 deg min elevation		**5 deg min elevation**	
	directly overhead	**not overhead**	**directly overhead**	**not overhead**
Total bytes per day to receive	12631680	12631680	12631680	12631680
Avail. download time (sec/day)	1667	1882	2750	2921
= raw data rate (byte/sec)	7577	6712	4593	4324
= raw data rate (bit/sec)	60620	53695	36747	34595
Divide by IP in Space efficiency	0.85	0.85	0.85	0.85
= processed data rate (byte/sec)	71318	63170	43231	40701
× 1.2 for design margin (byte/sec)	85581	75804	51878	48841

The connection between the satellite and the ground station is an asymmetric one since data are only generated from the spacecraft and then transmitted to the ground. Considering a design margin and a convolution encoding, the final baseline design requirement is defined as 200 kb/s. The uplink datarate is anticipated to be 9.8 kb/s.

8 Communication System

In developing the communications system for LionSat our most important goals are to build a system that will be as simple as possible to operate and be highly flexible while maintaining effectiveness. Currently, most satellite links are fairly complicated to operate and can require several professionals to maintain. Penn State aims to build a user friendly system that can be easily operated by undergraduates and professors and involve possibly multiple ground stations with minimal routing hassle. To meet the goals for the link we have chosen to implement the IP (Internet Protocol) commonly used for computer networking in a format suggested by the OMNI (Operating Missions as Nodes on the Internet) group at NASA Goddard Space Flight Center, who will be mentoring the LionSat team.

8.1 History

IP over a satellite link, dubbed "IP in Space" has successfully flown on UoSat-12, CHIPSat, and STS–107/CANDOS, and the OMNI group at NASA Goddard has also demonstrated the use of IP over NASA's TDRSS system.

8.2 Why IP

IP (or often TCP/IP) is a common communications protocol. Many popular applications such as FTP (File Transfer Protocol) use TCP/IP and documentation and code samples are widely available making it inexpensive to use. Implementing TCP/IP allows users to communicate with LionSat via applications that they are likely to be familiar with. This increases the ability for undergraduate students to get involved in the development and operation of LionSat. The use of a common protocol also increases the educational value of the LionSat program for students because the use of standard protocols will be more relevant to their professional development.

The IP protocol allows the use of MDP (Multicast Dissemination Protocol), which only requires a one-way link. This is an advantage in the event of a temporary receiver failure on the satellite because the satellite will be able to send data to the ground station without being commanded.

Using IP also allows secure communications via applications like SSH (Secure Shell) and protocols like IPSec. It allows ease of uploading new applications to run on LionSat, allows routing of information through multiple ground stations, and a ground station can be a single desktop computer with an analog signal card for processing an IF signal.

8.3 The Data Flow

At the application layer, FTP or a web server can be used to manually send and receive files to LionSat. Telnet or another application can be used to manually manipulate the file space and processes running onboard LionSat. MDP may be used to ensure automatic transmission of data from LionSat even in the event that it is unable to receive commands from the ground.

At the transport layer, TCP (Transmission Control Protocol) or UDP (User Datagram Protocol) may be used to package the application layer data. This package will contain the data and the necessary error protection sections to ensure the data will travel safely in the overall network.

At the network layer a form of IP will be applied. The IP package will now contain all the previous information plus the address of the sending and target systems. This will allow the packet to be routed to a specific ground station or to the satellite.

At the data link layer, if the packet is to traverse the RF link, the data package will be formatted into an HDLC (High-level Data Link Control) frame. The OMNI (Operating Missions as Nodes on the Internet) group at NASA Goddard has successfully used this format and will guide us in implementing it for the LionSat system. This final frame will be passed to the RF system for transmission. If the data package is not meant to travel the RF link then it will pass to the normal network data link and physical layers.

To help reduce overhead we are considering the use of Van Jacobson compression. This compression can be applied to reduce the size of IP and TCP header lengths.

8.4 The Platform

The main microprocessor for the LionSat satellite will be a StrongArm SA-1110 from Intel. This processor is cable of running at 206 MHz and addressing up to 768 MB of static RAM. The processor is capable of running Linux and several other operating systems. For our purposes we will run RTLinux as the operating system onboard LionSat. Software to implement the TCP/IP protocols for use in the Linux environment is publicly available. Penn State currently has two SA-1110 development kits from SSV Software Systems complete with copies of the Linux 2.4 Kernel, FTP and web server software. These boards will be used to fully develop the communications link code that will fly on LionSat.

Currently, we are studying the feasibility of building a ground station at Penn State with possible backup ground stations at NASA Wallops Flight Facility and at another university. The ground station at Penn State will be controlled by a desktop computer

running the Linux operating system and code necessary to process the received IF signal and the data to be transmitted. This is made possible through the use of a PCI card in the machine capable of converting data to and from a reasonable IF frequency. By using a common desktop PC and the Linux operating system, the cost of the ground station control system can be kept below a few thousand dollars. It will also allow the implementation of Mobile IP which can be used to pass easily information to and from LionSat and any ground station on the network.

9 Conclusions

The success of the LionSat mission will result in the mapping of the ram and wake plasma structure around a nanosatellite. Data will be collected on ionospheric plasma in a variety of geophysically interesting locations in low earth orbit. This data will be used for further scientific research about the ionosphere, which will be beneficial to future spacecraft missions. In addition, the LionSat mission can demonstrate how miniature RF ion thrusters can serve as an alternative means of propulsion for similar nanosatellite mission designs.

Currently, LionSat is in the Preliminary Design phase where CAD drawings, trade studies, analysis of subsystem components and flow-downs of mission requirements are driving the design process. With the resources available in the laboratories and mentoring from faculty and professionals, LionSat is on the road to success, which will show that nanosatellites are not only essential in learning about the ionosphere, and in learning about the space environment in general.

The involvement and real interest of students in a project which can provide them with an invaluable educational experience has already been demonstrated. LionSat allows us to be involved in many aspects of satellite development.

10 Acknowledgments

We wish to acknowledge our advisor, Dr Sven Bilén, for his guidance and encouragement (and for providing coffee). Without his real dynamism and interest, the opportunity of LionSat would never have crossed our paths. We also wish to thank Dr. Charles Croskey for his patience and valuable support to this mission. We want to especially mention Christopher Barella for his incredible work on the structural design and Michael Wyland for his outstanding dedication to LionSat. Finally, we wish to extend our thanks to all the members of the LionSat team, those involved in the project during this spring semester as well as the "Summer Team," which will have a decisive continuing role for the project. We also wish to thank our sponsors, which include AFRL. GSFC, AIAA, Boeing, Lockheed–Martin, BAE Systems, Pennsylvania Space Grant Consortium, and the College of Engineering.

11 Author Biographies

Valerie F. Mistoco is a PhD candidate in electrical engineering at The Pennsylvania State University. She received a "Maitrise de Physique" and a "DEA in fluids, atmospheres and plasmas" from the University of Orléans, France. She was involved in the ESA student parabolic flight campaign and flew on the CNES A-300 zero-G for a study of diamagnetic fluids. She is the project manager for the LionSat project. She is particularly interested in plasma physics and wishes to work in space related fields.

Robert D Siegel received a BS in Electrical Engineering from Penn State in 2002, and is currently pursuing a masters in E.E. He was a member of the Schreyer's Honors program and was selected as the Student Marshall for E.E. for the class of '02. He has worked in the CSSL since 2000 on various projects including the SPIRIT student rocket project, the design of a digital Langmuir Probe system, NASA's MACwave campaign, and recently the HPP system for LionSat. He hopes to work in the space industry while maintaining interest in image processing and optics.

Brendan Surrusco is a MS graduate student in Electrical Engineering. He received his BS degree in Electrical Engineering from Penn State in Spring 2003. He was one of the Student Design Team Leaders for Student Project Involving Rocket Investigation Techniques (S.P.I.R.I.T. II) Sounding Rocket Payload.

Erika Mendoza is an undergraduate student currently pursuing a BS in Aerospace Engineering at Penn State. She is a recipient of the Xerox academic Scholarship and works on systems integration for the LionSat project. Her interests lie in mission planning and guidance, navigation, and control. She hopes to continue working on space-related projects before pursuing a career in the development of space technologies.

12 References

[1] Nanosat website, www.universitynanosat.org
[2] Communications and Space Sciences Laboratory web page, www.ee.psu.edu/cssl
[3] Bilén, S., and C. Croskey, "Development of a Hybrid Langmuir and Plasma Frequency Probe," Communications and Space Sciences Laboratory, Penn State University, June 30, 2000.
[4] AFRL Internal Cargo Unit User's guide University Nanosat-3 Program, March 2003, p. 20.
[5] Lightband Clamp Ring, www.planetarysystemscorp.com
[6] AFRL Internal Cargo Unit User's Guide University Nanosat-3 Program, March 2003, p. 19–24.

[7] Larson, W. and J. Wertz, *Space Mission Analysis and Design*, pp. 341, 366, 209, 210

[8] Krehbiel, J.P., L.H. Brace, R.F. Theis, W.H. Pinkus, and R.B. Kaplan, "The Dynamics Explorer Langmuir Probe Instrument," *Space Science Instrumentation*, **5**, pp. 493–502, 1981

[9] F. Chen, *Introduction to Plasma Physics and Controlled Fusion*, Plenum Press, New York, NY. May 1990.

[10] Jensen, M.D., and K.D. Baker, "Measuring ionospheric electron density using the plasma frequency probe," *Journal of Spacecraft and Rockets*, **29**(1), pp. 91–95, 1992.

[11] National Space Science Data Center, "International Reference Ionosphere," nssdc.gsfc.nasa.gov, April 15, 2003.

[12] Leiter, H.J.; R. Killinger, H. Bassner, R. Kukies, J. Mueller, T. Froelich, "Evaluation of the performance of the advanced 200 mN Radio Frequency Ion Thruster RIT-XT," AIAA Paper 2002–3836.

[13] Foster, J E, and M. J. Patterson, "Microwave ECR ion thruster development activities at NASA GRC," AIAA Paper 2002–3837

[14] Chadwick, Haddad, Jakub, Meisenhelder, Scott, and Walter, "LionSat Guidance Navigation and Control Spring Semester Final Report," Penn State, 2003.