RAPIDEYE - AN EARTH OBSERVATION SMALLSAT CONSTELLATION FOR DAILY AGRICULTURAL MONITORING

Dr. George Tyc, Keith Ruthman
MacDonald Dettwiler & Associates
13800 Commerce Parkway, Richmond B.C., V6V 2J3, Canada
Tel: 604 278 3411
Fax: 604 231 2127
Email: gtyc@mda.ca

Paul Stephens, Alex Wicks, Tim Butlin, Prof. Sir Martin Sweeting
Surrey Satellite Technology Ltd.
Surrey Space Centre , University of Surrey
Guildford, Surrey GU2 7XH, UK
Tel: (44) 1483 689278 Fax: (44) 1483 689503
Email p.stephens@sstl.co.uk

Dr. Manfred Krischke, Michael Oxfort
RapidEye AG
Wolfratshauser Str. 48
81379 München
Tel: +49 89 72495 455
Fax: +49 89 72495 291
Email: krischke@rapideye.de

ABSTRACT

The RapidEye mission is a commercial remote sensing mission by the German company RapidEye AG. The RapidEye mission will deliver information products for various customers in the agricultural insurance market, large producers, international institutions and cartography. The mission that generates these information products consists of a constellation of five identical small satellites and a sophisticated ground infrastructure based on proven systems.

The five satellites will be placed in a single sun-synchronous orbit of approximately 620 kilometers, with the satellites equally spaced over the orbit. The satellites will each carry a 5 band multi-spectral optical imager with a ground sampling distance of 6.5 meters at nadir and a swath width of 80 km. The RapidEye system has the unique ability to image any area on earth once per day and can also provide large area coverage within 5 days. This capability along with the processing throughput of the ground segment allows the system to deliver the information products needed by the customers reliably and in a time frame that meets their specific needs.

Introduction

The RapidEye Mission is a commercial undertaking by the German company *RapidEye AG* who intend to offer a land information service to a variety of customers. These information service products are based on the data that is generated by a constellation of Earth Observation satellites. Macdonald Dettwiler & Associates (MDA) is the prime contractor for the mission responsible for the implementation of the entire system, including the development of the space and ground segments, launch and in-orbit commissioning and calibration of the spacecraft constellation, and establishing the mission operations infrastructure.

RapidEye Key Market Segments

The information products that RapidEye will be offering are focused on the following four key market segments:

- Agricultural Insurance: RapidEye will offer regularly updated field maps to help insurers in the insurance contract assessment and will support the loss adjustment process by providing quick and reliable information about damaged areas.
- Agricultural Producers: The information generated by the RapidEye system will support the precision farming system substantially by regularly providing crop condition information.
- International Institutions: International agencies and institutions require knowledge of the levels of expected crop harvests, monitor the usage of subsidies and provide emergency relief in disaster situations. RapidEye will be able to provide up-to-date and comprehensive information for these purposes.
- Cartography: The need for current maps is significant given that much of the current data is out of date. RapidEye will be the first company to provide regular updates at a scale of 1:25,000. Commercial sales to the military will be a major opportunity in this segment.

Key Mission Requirements

To meet RapidEye's business needs, the mission design must have the following key characteristics:

- Multi-spectral Optical Imager: High quality ortho-rectified imagery is required in 5 spectral bands that provides a ground sampling distance (GSD) between 5–10 m.
- Global Daily Revisit: Rapid turnaround from a customer's request for information products to delivery is a key requirement for RapidEye's market segments. Hence, it is required that the satellites have daily revisit capability anywhere on the Earth.
- Rapid Area Coverage: To allow monitoring large areas of interest and provide frequent information updates to customers, the system must have the capability to provide large area coverage in less than 6 days for the primary regions of interest.
- Large Data Capacity: A significant ortho-image data capacity is required to allow building up and maintaining an extensive database of information for large areas of interest.

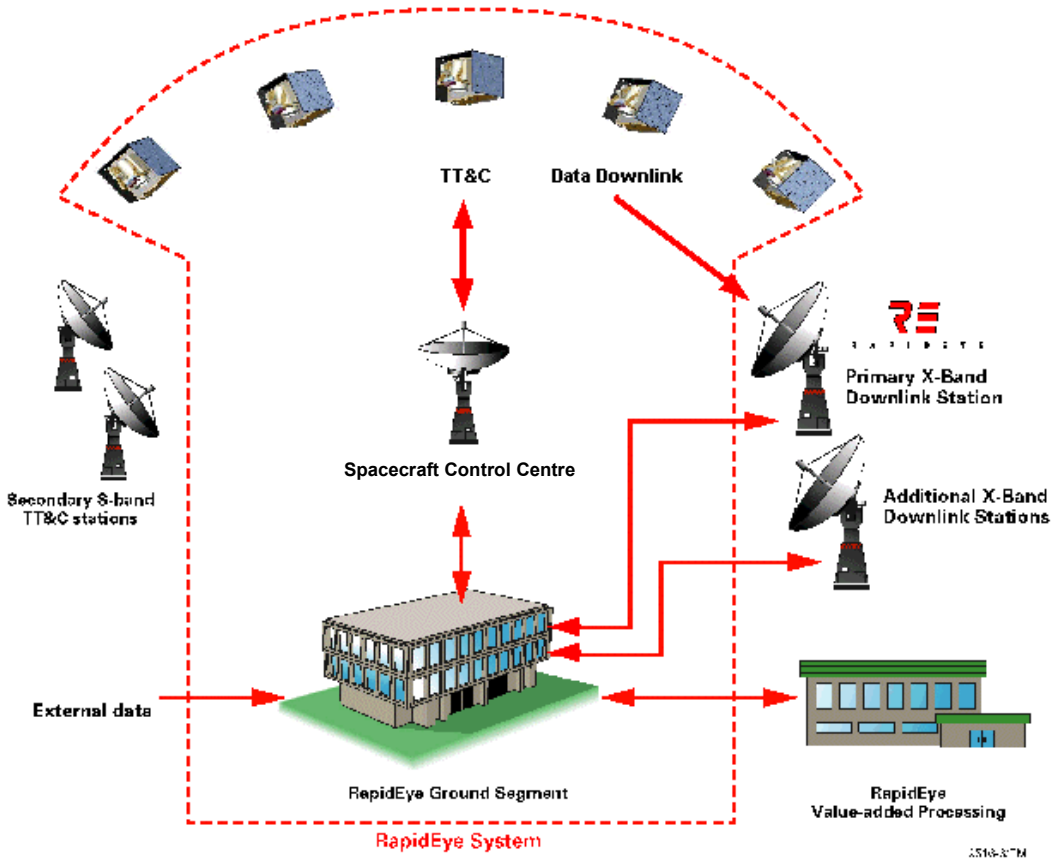

Figure 1 The RapidEye System

RapidEye Mission Overview

To achieve the key business requirements, RapidEye system consists of five identical small satellites and a ground infrastructure as shown in .

Rapideye Constellation

The five satellites will be launched together on a single launch vehicle into a sun-synchronous orbit at an altitude of approximately 620km. The satellites will be in a single orbit plane, equally spaced around the orbit. As a result, the satellites follow each other approximately 19 minutes apart. Each satellite, weighing approximately 150 kg, carries a push broom optical imager that provides a swath width on the ground of approximately 80 km. The imager's field-of-view (FOV) can be oriented across track by rolling the spacecraft up to +/-25 degrees to provide the necessary coverage capability. The RapidEye mission ground infrastructure includes: a dedicated Spacecraft Control Centre to control the spacecraft constellation; a ground segment that provides the data processing, archiving facilities and the customer interface; commercial data downlink sites; and the RapidEye value-added product processing facility that uses the ortho-rectified image data from the ground segment to generate the information products needed by the customers. The key mission parameters are given below in Table 1.

Table 1 Key Mission Parameters.

Parameter	Value
Orbit	600-620 km, sun-synch
Number of Satellites	5
Spacecraft Mass	150 kg
Image Data Downlink	> 60 Mbps (in X-band)
Onboard Data Storage	> 1500 km of image data
Max Spacecraft Roll Angle	25 deg
Payload Type	Push broom scanner (no moving parts)
No. of Optical Bands	5 (400–850 nm)
Detector	12 K pixel linear CCD per band
Nadir Pixel GSD	6.5 m
Swath Width	80 km
Global Revisit Time	< 1 day
Average Coverage Repeat Period (Europe & North America)	< 5 days
DEM Generation Capability	Yes
Mission Lifetime	7 years

Mission Implementation

To meet the business objectives, the RapidEye mission implementation must be highly cost effective while providing a high degree of reliability. To achieve the cost and reliability goals of the program, the spacecraft hardware is based, to the maximum extent possible, on heritage designs. For example, the spacecraft bus design is based on a flight proven microsat platform requiring very little new development. The small spacecraft size allows all 5 spacecraft to be launched on one launch vehicle providing significant cost savings to the program. Also, the identical design for all five spacecraft enable the advantages of scale and efficient assembly and integration. To address the high reliability, two redundancy levels have been designed into the mission. First the spacecraft has internal redundancy for mission critical components and graceful failure modes (i.e., providing reduced performance in the event of a failure) so that they are at least one failure tolerant. Second, all the RapidEye business requirements can be met by a constellation of only four satellites, allowing for a total failure of one satellite. This comprehensive set of redundancy is considered a key requirement for investors in the RapidEye business.

The Rapideye Spacecraft

The RapidEye Spacecraft is shown in Figure 2. The overall spacecraft mass is approximately 150 kg, which includes about 35 kg for the Payload.

Spacecraft Bus

The spacecraft bus will be developed by Surrey Satellite Technology Ltd (SSTL) and will be based heavily on a flight proven design. The general spacecraft layout has the spacecraft divided into two separate functional volumes. At the base of the spacecraft is the core bus hardware including the launch vehicle separation system, which is baselined as a 4 point release system with integral deployment springs. At the top end of the spacecraft is the payload which is comprised of a Multispectral Imager (MSI) and a Payload Electronics Unit (PEU) as shown in Figure 2.

Three body mounted GaAs solar panels are located on the +X (velocity direction), -Z (zenith), and –X faces of the spacecraft.

The compact spacecraft configuration is required to allow launching 5 spacecraft together on a single launch vehicle.

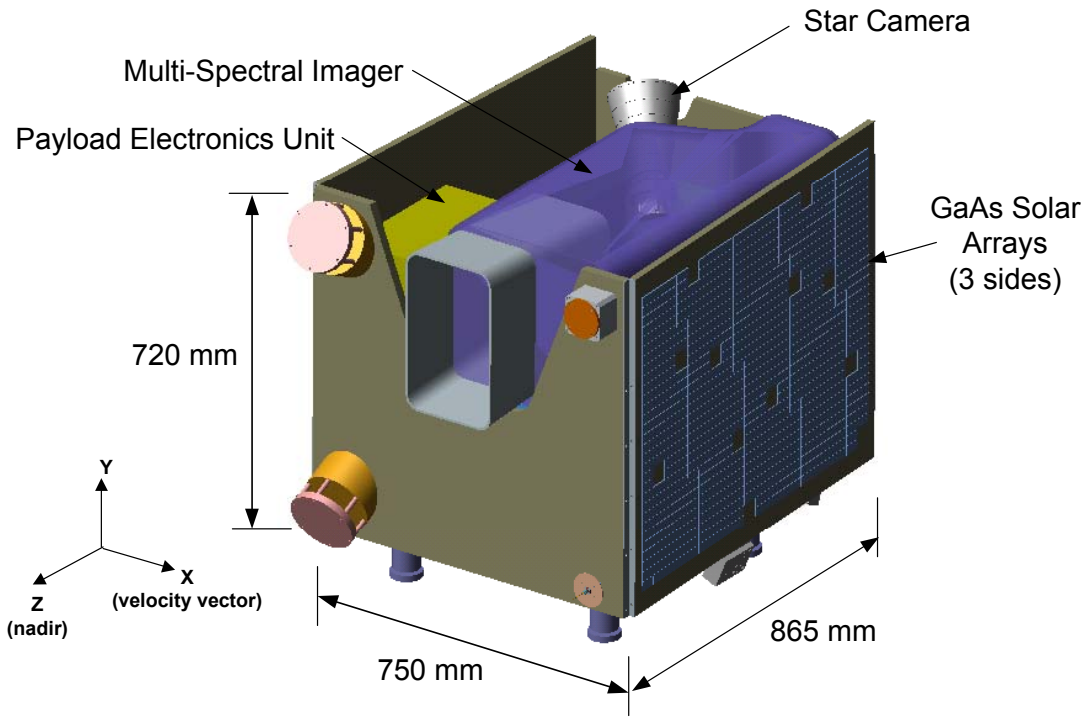

Figure 2 The RapidEye Spacecraft

The architecture of the spacecraft is shown in Figure 3. Redundant spacecraft onboard computers (OBC's) are used to perform all bus housekeeping functions. A dual redundant CAN bus architecture provides communication between the OBC's and the other spacecraft subsystems including the Payload. This provides a reliable means for controlling the spacecraft subsystems and managing the onboard redundant systems.

The power system consists of the three GaAs solar panels which provide about 100 W of power generation capability when in the sun. The battery uses two NiCd battery packs providing a total capacity of 8 A-hrs. The Battery Charge Regulators (BCR's) are based on a Peak Power Tracking approach. Six individual BCR's are used (2 per solar panel) which also provides some graceful failure modes should a failure occur.

The attitude control system relies on 4 reaction wheels for 3-axis control with redundant magnetic torques for momentum management. Redundant sun sensors and magnetometers provide the coarse attitude knowledge with a star camera providing the high accuracy attitude information. To minimize alignment atti-

tude knowledge errors, the star camera is mounted directly to the payload optical bench. The propulsion system is based on a cold gas blow down system utilizing a resistojet thruster with a single propellant tank and associated plumbing located in the middle section of the bus. On-board GPS is used to provide accurate orbit knowledge and also to provide timing synchronization with the payload.

The TT&C uplink and downlink utilizes redundant S-band transmitters and receivers, while the data downlink utilizes a dedicated X-band transmitter providing a data rate > 60 Mbps. A fully redundant transmitter and antenna chain is provided as shown in Figure 3.

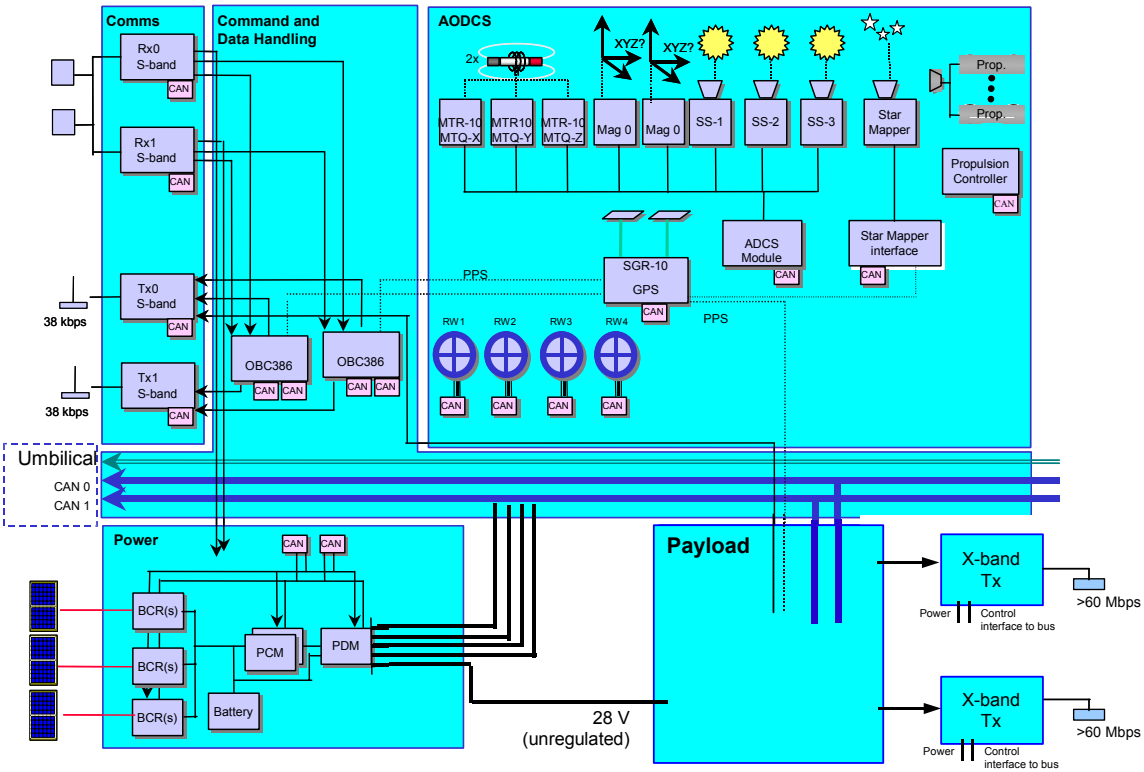

Figure 3 Spacecraft Block Diagram and Architecture

The Rapideye Payload

The RapidEye payload on each spacecraft is comprised of 2 separate units, a Multi Spectral Imager (MSI), and a Payload Electronics Unit (PEU) as shown in Figures 2 and 4.

Multi Spectral Imager Design

The MSI is a pushbroom style imager which images the earth in 5 spectral bands over a 80 km swath at 6.5 m resolution (at nadir). The collector optics image onto five parallel linear 12K pixel CCD detectors. The collector optics utilizes a Three

Mirror Anastigmat (TMA) design. The requirements for the optical camera are well within what has already been demonstrated for similar systems. The required aperture is approximately 150 mm. Filters, placed in close proximity to each CCD, separate the spectral imaging bands. The five spectral bands are as follows:

Table 2 RapidEye Spectral Bands.

Channel	Spectral Band Name	Spectral Range (nm)
1	Blue	440 – 510
2	Green	520 – 590
3	Red	630 – 685
4	Red edge	690 – 730
5	Near IR	760 – 850

Payload Electronics Unit Design

Each CCD produces 4 outputs, which are synchronously clocked out by the detector readout electronics at a rate of approximately 3.2 MHz, allowing for 12 bit digitisation with low readout noise. The raw pixel data, totalling nearly 765 Mbps, is transferred to the PEU via a set of high speed serial interfaces.

The PEU provides a separate processing chain for each CCD, with a redundant chain cross-strapped to the others. The first step in the processing chain is to correct CCD data, in real time, for gain and offset non-uniformities using a programmable table of coefficients. This must be done prior to data compression to prevent image defects from biasing the compressed data. CCD correction coefficients, derived from imaging of ground calibration sites, can be periodically uploaded from the ground station.

The corrected image data can be processed in a variety of ways to reduce data volume prior to transmission. Pixel binning in 2x2 or 3x3 sizes provides the most rudimentary data compression method (one axis is binned directly on the CCD to reduce readout noise). The PEU also supports both selectable lossless 2:1 compression and lossy (up to 10:1) compression ratios based upon direct cosine transform (DCT) or wavelet algorithms.

The compressed data, together with spacecraft GPS and attitude information, is stored in mass memory, which provides sufficient storage for a 5-band imaging swath length of up to 1500 km at 2.5 bits/pixel. The final stage of processing is performed by the data formatter, which encodes the data for error correction and encryption and sends it directly to the spacecraft X-band transmitters.

The PEU provides overall control of the imaging process. Each imaging segment can be individually configured for different compression schemes, allowing multiple user data requirements to be met.

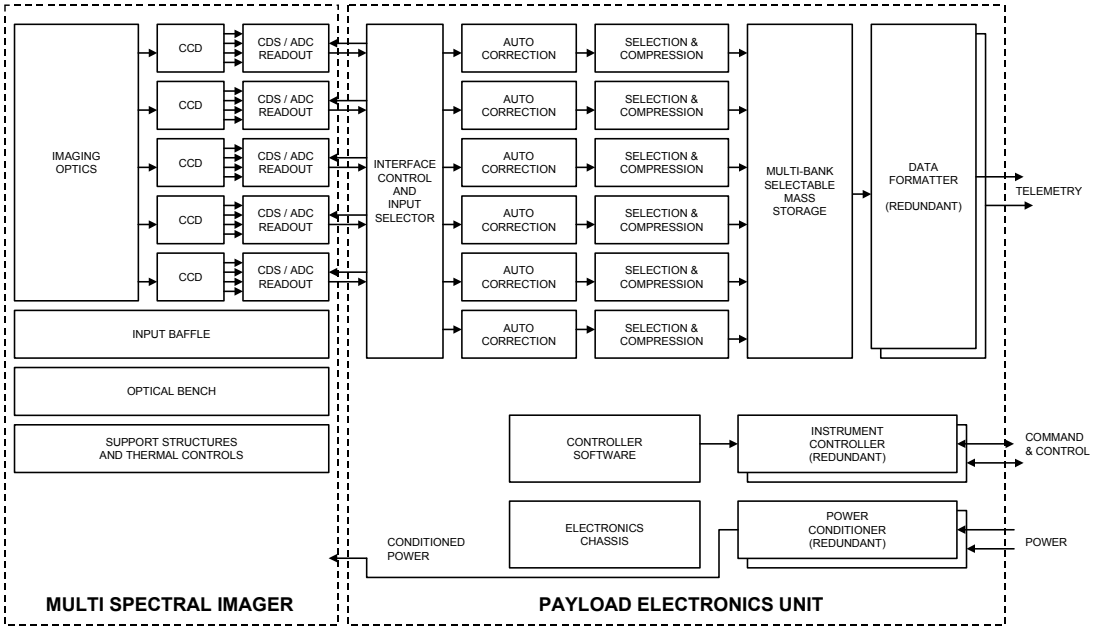

Figure 4 Payload Block Diagram

Ground Segment Description

The RapidEye Ground Segment features Commercial-Off-The-Shelf (COTS) hardware that has been selected for its performance, maintainability and expandability. The proposed architecture features high-performance technologies for the network, processors, output peripherals, archive, and workstations, which will be installed at RapidEye's operational facility in Germany. Figure 5 provides a block diagram depicting the Ground Segment.

Ground Segment Characteristics

The Ground Segment provides the following key functions:

- A customer order interface capability.
- Satellite acquisition planning function that takes into account satellite constraints, weather and cloud predictions, the underlying data acquisition plan, and special image tasking requests for stereo data acquisitions and acquisition of specific targets.
- Satellite command and control to task the constellation and maintain its health and safety.
- Image processing capability to convert raw imagery into ortho-products.
- A capability to extract DEMs from stereo imagery using an optimal mix of automated processing and manual editing.
- A calibration capability to ensure the performance of the sensors and processing system.
- An interface to the value added information product processing facility.
- A product catalogue and multi-tiered data archive for raw data, ortho-products, DEMs and information products.
- Support to other data providers to obtain weather forecasts, cloud cover predictions, DEMs and other information

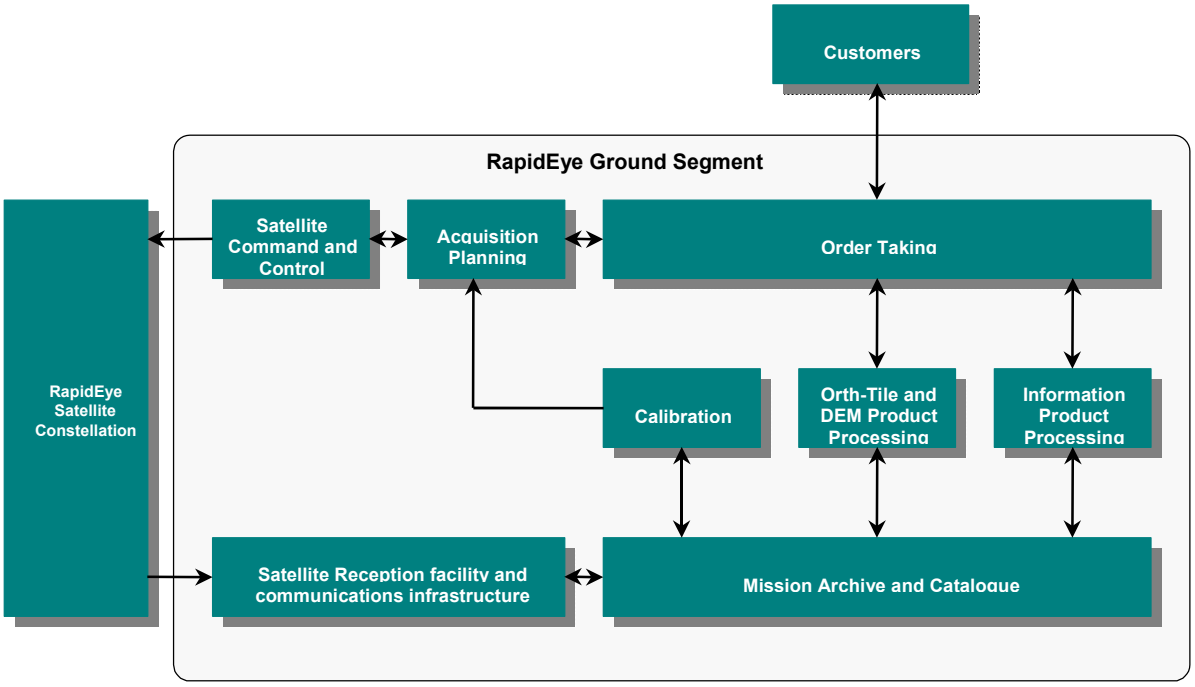

Figure 5 RapidEye Ground Segment

Conclusions

The RapidEye mission is a unique commercial small satellite Earth Observation mission that is focussed entirely on delivering an information service to the RapidEye customers. All system design decisions are based on meeting the business plan requirements and have resulted in a highly cost effective and very capable constellation of five reliable small satellites along with a proven ground infrastructure. The system is capable of delivering the information products needed by the customers reliably and in a time frame that meets their specific needs.

The RapidEye mission will generate a unique earth observation data set on which exclusive information products can be developed. The ability of the system to monitor large areas with repeat periods in the order of a few days and at the same time respond to specific requests within a single day offers a capability that is not available from current remote sensing systems.