The Living With a Star Geospace Missions

Andrew W. Lewin and Laurence J. Frank
Johns Hopkins University Applied Physics Laboratory (JHU/APL)
11100 Johns Hopkins Road
Laurel, MD 20723
443-778-8961
andy.lewin@jhuapl.edu

Abstract

The Geospace Missions are the second major mission element in NASA's Living With a Star program. The missions are designed to help scientists understand, and eventually predict, the response of the geospace system to solar activity. The investigations will be carried out by two pairs of spacecraft and a high-altitude far ultraviolet (FUV) imager. This observatory network provides the first opportunity to make multi-point *in situ* measurements of the ionosphere-thermosphere (I-T) system and the radiation belts (RB) with coordinated measurements between the two regions.

The first two spacecraft are the I-T Storm Probes (I-TSP), which will study mid-latitude ionospheric variability. They will be launched on a Taurus-class launch vehicle into a 450km circular orbit at 60° inclination. The second pair of spacecraft is the RB Storm Probes (RBSP) that will study the dynamics of radiation belt ions and electrons. These spacecraft will be launched on a Delta II-class launch vehicle into a low inclination, near-GTO orbit. The launch timelines are phased to enable all four spacecraft to make observations at or near solar maximum when solar and geospace activity are the most frequent and severe. The FUV imager will fly on a mission of opportunity in conjunction with I-TSP and RBSP as a payload on a high-altitude spacecraft.

One of the greatest challenges of the Geospace Missions is performing groundbreaking science on four dedicated platforms and an imaging instrument within a $400 million total budget. Advancements in small satellite technology and capabilities have enabled the missions; future developments could greatly improve the quality and quantity of science that can be performed with the limited funding resources. This paper provides a brief overview of the I-TSP and RBSP mission requirements, discusses some of the key system-level design challenges, and presents candidate spacecraft concepts.

LWS Overview

Space weather, like terrestrial weather, is a dynamic process that can be characterized at various time as mild, moderate, or severe. Severe space weather, as with Earth weather, can have substantial effects on human activities and our increasing dependence on technology. The Living With a Star (LWS) program was initiated in late 1999 to advance our understanding of space weather and provide knowledge that may allow us to mitigate its effects on life and society.

NASA Headquarters' Office of Space Sciences (OSS) directs five major themes of research and development (Figure 1). One of these is the Sun-Earth Connections (SEC) theme that emphasizes research of the Sun-Earth connected system in order to understand how the sun's variability couples to Earth and its environment. The Living With a Star program was added to the SEC theme specifically to advance the scientific understanding of solar variability and its impact on terrestrial life and society. What distinguishes LWS from NASA's highly successful Solar Terrestrial Probes (STP) program, also within the SEC theme, is its focus on space weather and applications-driven research. The LWS program will design, develop, and operate a multi-mission, long-duration, space-based system to:

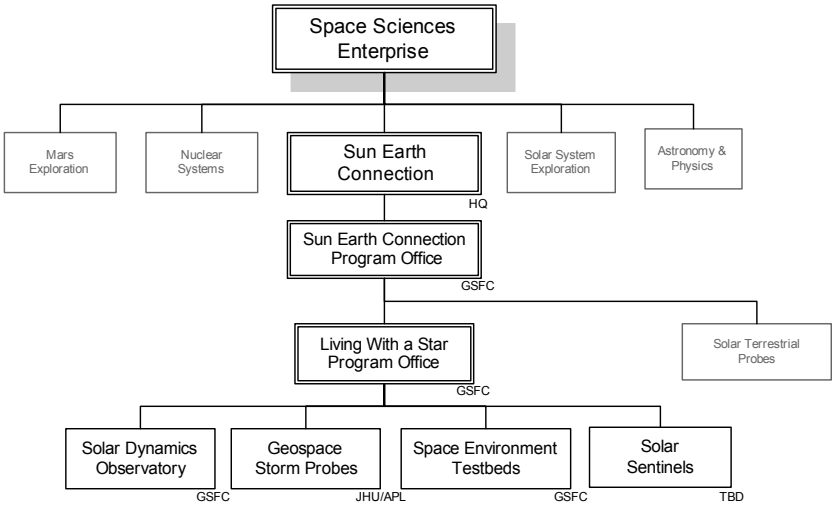

Figure 1: Living With a Star Organizational Structure

1. Identify and understand variable sources of mass and energy coming from the sun that cause changes in our environment with societal consequences, including the habitability of Earth, use of technology, and the exploration of space.

2. Identify and understand the reactions of geospace regions whose variability has societal consequences (impacts).

3. Quantitatively connect and model variations in the energy sources and reactions to enable an ultimate US forecasting capability on multiple time scales.

4. Extend the knowledge and understanding gained in this program to explore extreme solar terrestrial environments and implications for life and habitability beyond Earth.[1]

These objectives can only be accomplished by multiple mission assets in a coordinated system that provides integrated scientific measurements of solar dynamics, heliospheric phenomena, and the response of the near-Earth region of geospace. In establishing LWS, NASA recognizes that a broad-based and long-term commitment is required in order to develop the multiple mission elements, provide long term support to missions, and obtain data over time scales that range from minutes to decades. Figure 2 depicts the coupling of the solar outputs to the Earth environment and climate.

Programmatically, the NASA Goddard Space Flight Center (GSFC) is responsible for the LWS program. The Johns Hopkins University Applied Physics Laboratory (JHU/APL) has been awarded a contract to partner with GSFC in the development and management of LWS mission elements when requested and assigned by NASA Headquarters. The Geospace mission is the first LWS mission assigned to JHU/APL.

LWS Mission Elements

The LWS space assets that are in the current program concept include: (1) Solar Dynamics Observatory, a solar observatory mission; (2) Solar Sentinels, a heliosphere monitoring mission; (3) Geospace Storm Probes, a near-Earth space monitoring system; (4) Space Environmental Testbed, a series of technology investigation projects.

Solar Dynamics Observatory: The Sun provides the stimulus that drives space weather and global climate change. Characterizing and understanding the variations in the Sun's behavior over the course of a solar cycle is key to improving characterization and forecasts of Earth's space weather. The first mission element of LWS is the Solar Dynamics Observatory (SDO). SDO is a geosynchronous solar observatory that will measure the dynamics of the solar interior, provide data on the Sun's magnetic field structure, characterize the release of mass and energy from the Sun into the heliosphere, and monitor variations in solar irradi-

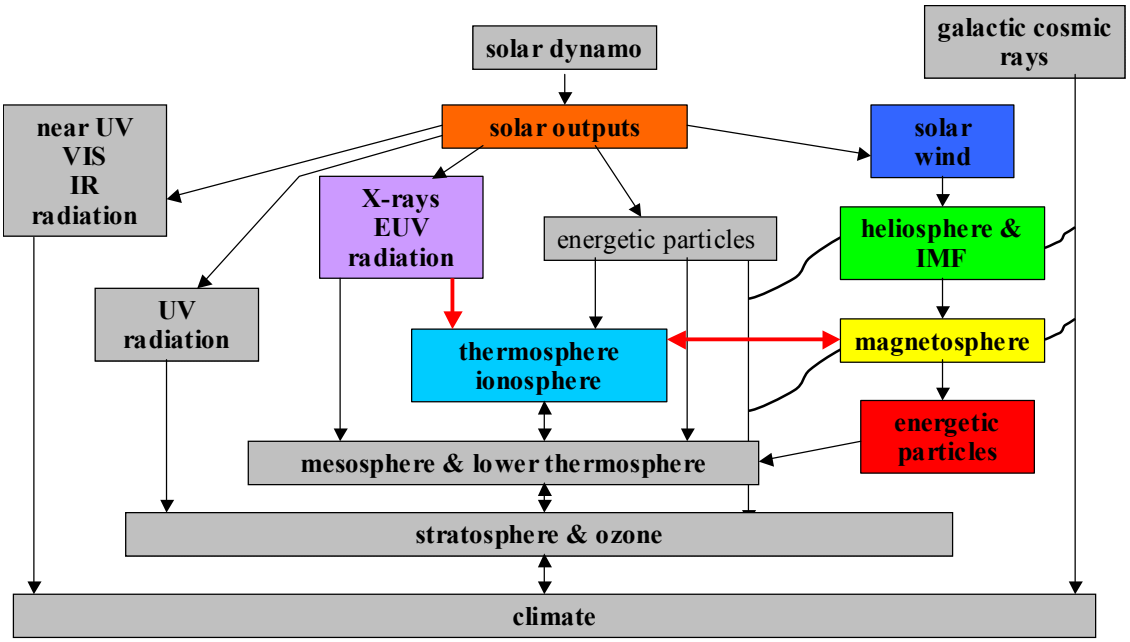

Figure 2: The Earth Environment Connection to Solar Dynamics

ance. SDO is currently under development at GSFC.

Solar Sentinels: The dynamic behavior observed in the Sun results in mass and energy propagating through the inner heliosphere to reach and affect the Earth's geospace environment. The LWS Sentinels mission will make *in situ* measurements of the solar wind dynamics at various radial distances from the Sun as they propagate towards Earth.

Geospace Storm Probes: The geospace mission elements will characterize the response of the Earth's magnetosphere, ionosphere, and thermosphere to solar irradiance observed by SDO and solar wind dynamics measured by the Solar Sentinels. Geospace space assets include multiple Earth-orbiting spacecraft measuring (1) system response of the mid-latitude ionosphere-thermosphere (I-T) region, (2) charged particle and fields environment of the radiation belt region of the magnetosphere, and far ultra-violet (FUV) imaging of the Earth to identify global scale systematic behaviors.

Space Environmental Testbed(s) (SET): LWS will support technology experiments related to characterizing the near-Earth space environment and evaluate the impact of that environment on space technology.

Geospace Science

Geomagnetic storms represent a severe manifestation of local space weather. The magnitude and effects of these storms are influenced by solar variations leading up to the storm and are often triggered by acute disturbances on the Sun. In the summer of 2001, NASA commissioned a Geospace Mission Definition Team (GMDT) composed of independent science experts in the field of geospace research to assist defining the mission objectives. The findings and recommendations of the GMDT were documented in a report to NASA in Fall 2002.[2]

Geomagnetic storms create powerful currents and strong electric fields, generate highly energetic particles, and redistribute particles within the geospace region. These physical effects in turn have societal consequences: (1) potential damaging conditions for spacecraft, (2) disruptions to communications and navigation systems, (3) health hazards for astronauts, (4) increased satellite drag, and (5) induction of ground currents that can disrupt terrestrial power grids.

The Geospace Storm Probes mission will characterize the particles and fields in the near-Earth space environment as they are modulated by the influence of the solar wind interacting with the Earth's magnetosphere. The Geospace Storm Probes will make global measurements of energetic particle populations and their motions and energies, as well as the magnetic and electric fields that influence the migration of particles. During storm times the Geospace Probes will provide sample measures of local disturbances by making multi-point measurements in both the ionosphere-thermosphere region and the radiation belts.

The GMDT established priority science objectives that focused on two distinct regions of geospace. They struggled to maintain the ability to address key science objectives while attempting to maintain realism imposed by known funding limits. The compromises led to three elements of the "Geospace Network" that would provide core measurements required to expand the current understanding of the coupled near-Earth regions collectively called geospace. The goal is to have all three assets simultaneously deployed and operating for more than one year.

Geomagnetic storms produce significant changes in the radiation belts. The Radiation Belt Investigation addresses that region of geospace with two nearly identical spacecraft known as the Radiation Belt Storm Probes (RBSP). The RBSP spacecraft are to be deployed in low inclination, highly elliptical orbits in order to transition through the radiation belts several times per day. The instrumentation provides measurements of radiation belt particles, electric and magnetic fields, ring current particles, and low energy plasma. Two spacecraft provide multipoint measurements to distinguish temporal and spatial variation along the nearly identical orbit paths.

The ionosphere responds to geomagnetic storms instantaneously and then recovers over a period that may last tens of hours to days. Multiple spacecraft are required to determine the gradients and irregularities in the mid-latitude ionospheric response to storms. Two identical Ionosphere-Thermosphere Storm Probes (I-TSP) spacecraft are recommended. The planned orbits are circular, inclined to observe mid-latitude regions (~60°), flying at an altitude no greater than 500km with the longitude and latitude separation between each spacecraft controlled to provide scientifically significant spatial and temporal separation for the multi-point measurements. The science measurements include the neutral wind density and temperature, plasma characteristics, and instrumentation to characterize the electron density profiles of the ionosphere below the orbit altitude.

Figure 3 depicts the RBSP and I-TSP Geospace Storm Probes recommended by the GMDT in their respective orbits.

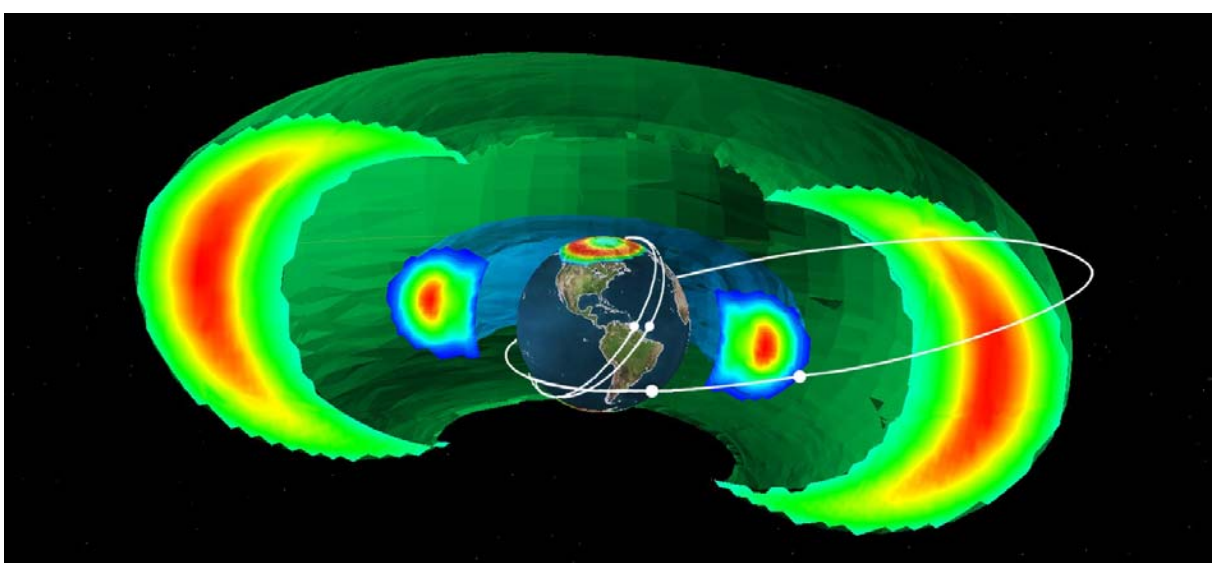

Figure 3: Geospace Storm Probes

The last of the three Geospace Network elements is a remote sensing asset providing FUV measurements of the global I-T region. This element provides global context for the phenomena that are locally observed by the I-TSP spacecraft.

Ionosphere-Thermosphere Storm Probes

Mission Summary

The I-TSP mission consists of two spacecraft in circular low Earth orbits (LEO), inclined at 60° to the equator and separated by 10° to 20° in mean local time (MLT). The orbit altitude must be below 500km, but lower altitudes produce better science measurements. The nominal operating altitude is 450km. Finally, the spacecraft must maintain a loose formation such that the mean anomaly variation is no greater than the MLT separation.

The two spacecraft are launched together on a Taurus 2210 launch vehicle originating from Vandenberg Air Force Base. The orbit separation is achieved by temporarily raising the altitude of one spacecraft by approximately 50km. This induces a differential drift of the orbit nodes that produces the desired MLT separation in approximately three months.

Since one of the key objectives of the Geospace mission is to improve ionosphere-thermosphere modeling and prediction, long duration observations are highly desirable. The selected orbits are subject to two life-limiting elements, propellant and cost. The 400-450km orbit has relatively high atmospheric density, especially at solar maximum. As a result, the drag is constantly lowering the satellite orbit. The spacecraft carries a propulsion system to periodically return the spacecraft to its target orbit. Cost is also an important factor. Aside from the obvious operations costs, long duration mission life dictates that the spacecraft be highly reliable. Due to cost constraints, it is expected that the Geospace spacecraft will be largely single-string. Therefore, a design life of 3 years is the best that can be reasonably expected.

Measurement Requirements

The GMDT identified three sets of measurement requirements, Core, Baseline, and Augmentation. The Core measurement set represents the measurements necessary to achieve the minimum science requirements. Including the Baseline and Augmentation measurements significantly enhances the science value of the mission. These measurements are listed in Table 1.

Table 1: I-TSP Measurement Requirements

Core
Plasma density and fluctuations
Plasma density altitude profile
DC electric fields
Neutral density and mass composition
Neutral temperature
Vector neutral wind
Scintillations
Baseline
Low-energy electrons
Magnetic field
AC electric field
Augmentation
Ion mass composition
Electron temperature
Ion temperature

The mission formulation team used these measurement requirements to derive a strawman science instrument complement. These instruments, together with the mission definition, establish spacecraft performance requirements, which are discussed in the following section.

Table 2: I-TSP Instrument Accommodation Requirements

	Mass	**Power**	**Data Rate**	
			Burst	**Normal**
	kg	W	kbps	kbps
Instrument package	18.5	32.8	19.5	10.5
Margin	5.6	16.4	6.0	3.2
Total	**24.1**	**49.2**	**25.5**	**13.7**

The instrument accommodation requirements are summarized in Table 2. The instrument mass and power allocations represent conservative estimates based upon existing or previously flown instruments. Instruments based upon the current state of the art are expected to reduce these requirements. The data rates are derived from the measurement frequency needed to satisfy the core science requirements. Due to the early stage of the design, generous margins are held against all parameters.

Table 3: I-TSP Key Mission Requirements

Parameter	Value	Driver
Launch Date	Late 2008/early 2009	Measure during solar maximum
Mission Life	3 yr, 5 yr expendables	Propellant, cost
Redundancy	Single-string	Cost
Orbit	450 km circular; 55°-65° inclination (60° nominal); 10°-20° MLT separation (10° nominal) Mean anomaly separation no greater than MLT separation	*In situ* measurements
Orientation	Nadir, fixed yaw	Plasma, neutral measurements
Att. Knowledge	0.3°, 3σ	Neutral wind measurements
Att. Control	3°, 3σ	
Electrical Cleanliness	Electrically clean ram face; >10% of external surface conducting; no exposed voltages	Plasma measurements
Parts Reliability	Level 2	GSFC quality requirements
Availability	95%	Cost
Data return	95%	Cost

Spacecraft Summary

The design of the two ionosphere-thermosphere science spacecraft is driven by the instrument and mission requirements. The key mission requirements are summarized in Table 3.

Attitude Control

The instrument pointing requirements fully constrain the spacecraft orientation such that the spacecraft is fixed in the local vertical, local horizontal frame. This requirement lends itself well to three-axis stabilized, pitch momentum bias attitude control. This approach employs a momentum wheel in the pitch axis to provide high gyroscopic stiffness. This provides good attitude stability and disturbance rejection. It can easily satisfy the 3° attitude control requirement. In addition, the wheel is used for pitch axis attitude control. Three orthogonal magnetic torquers provide momentum dumping and control torques in the other axes.

Although the instruments have a relatively loose attitude control requirement, the knowledge requirement is more stringent at 0.1° (3σ). Primary attitude knowledge is provided by a pair of star trackers operating in a gyroless mode. The spacecraft will carry a gyro to support propulsion maneuvers, but the gyro is turned off to reduce worst-case orbit-average power requirements. The modest availability requirement enables this approach. Coarse sun sensors and a magnetometer provide coarse attitude knowledge for contingency operations. The magnetometer is also used to establish the appropriate torquer commands.

Another key ACS requirement is to support propulsion maneuvers. The system uses off-pulsing of four canted thrusters to produce the thrust and yield control torques about all three axes. The gyro provides rate information that permits near-continuous thruster operation.

Mechanical

The mechanical configuration is driven by:

1. required solar array area
2. desire to minimize drag (to keep the

Table 4: Solar Array Configuration Evaluation

	Advantages	Disadvantages
Body mounted	Simple, reliable; Preferable from a science perspective; Could be required to satisfy secondary measurement requirements	Inefficient use of solar array area; Large array area required drives spacecraft mechanical configuration
Fixed deployed	Separates spacecraft mechanical configuration from array size	Higher development cost; Deployment risk
Deployed one-axis rotating	Reduces required array area	Increases drag; Higher development cost; Drive adds failure mode
Deployed two-axis rotating	Smallest required array area	Increases drag; Higher development cost; Deployment risk; Drive adds failure mode

pulsion system small)

3. need to mount two spacecraft on a Taurus
4. desire for aerodynamic stability (to minimize attitude disturbances)

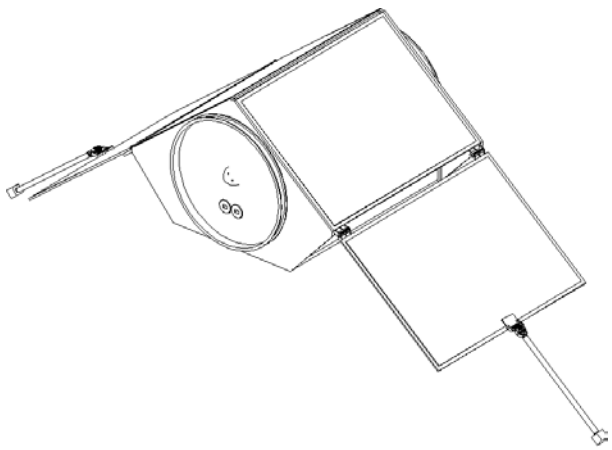

Figure 4: I-TSP Deployed Configuration

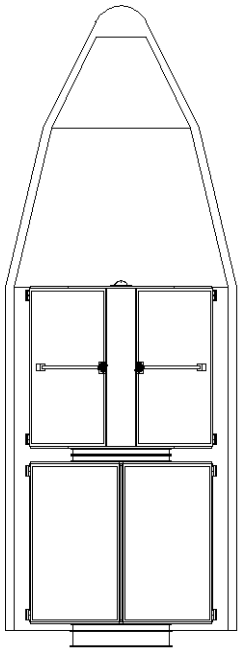

Figure 5: I-TSP Stowed Configuration

The difficulty for the solar array configuration is that the spacecraft attitude must remain fixed in the local level frame while the beta angle (the angle between the Sun vector and the orbit plane) varies from +83.5° to –83.5°. This challenge can be met with one of four panel options: body mounted, fixed deployed, deployed one-axis rotating, and deployed two-axis rotating.

As Table 4 shows, each of the options has significant advantages and disadvantages. From a cost perspective, the preferred option is not immediately obvious. The body-mounted option has the highest array area and thus the highest array and substrate cost, but it avoids the procurement, development, integration, and software costs associated with the other three options. The current design uses a fixed deployed baseline, although this decision will be revisited with a more detailed trade study as the mission formulation progresses. The deployed and stowed baseline configurations are shown in Figure 4 and Figure 5.

Due to the low spacecraft altitude, launch mass is not a significant driver. The Taurus 2210 is capable of placing approximately 840kg into a 450km circular orbit. Furthermore, the Taurus is being phased out in favor of the Taurus XL, which will have even greater lift capacity. The spacecraft mass budget is provided in Table 5.

Table 5: I-TSP Spacecraft Mass, Power Budgets

	Mass		Power	
	Mass	**Margin**	**Power**	**Margin**
	kg	%	W	%
Instruments	36.4	30	68.0	30
Structure	68.4	20		
Attitude Control	15.6	20	24.9	20
Power	63.1	20	25.8	20
Thermal	12.6	20	37.5	50
C&DH	21.7	20	41.0	20
Harness	19.8	22	4.0	28
Propulsion	9.5	20	1.1	20
Subtotal	247.1	21.5	202.3	28.2
Reserve	24.7	10.0	20.2	10.0
Total (Dry)	**271.8**	**33.6**	**222.5**	**41.1**
Propellant	30.1			
Total (Wet)	**301.9**			

Power

Since the solar array configuration is a significant spacecraft configuration driver, the power system employs high-efficiency triple-junction gallium arsenide cells. Peak power trackers for each panel maximize the utilization of the array area. The cell interconnects are insulated to prevent exposed voltages from impacting plasma measurements. One of the disadvantages of the fixed solar panel

design is that the spacecraft generates no power for more than half of the worst-case orbit. This leads to a larger battery for the orbit average load. The battery is 23 A-Hr nickel-hydrogen common pressure vessel design. Due to this and the impact of array size, the spacecraft design is sensitive to power requirements. The power budget is shown in Table 5.

Power distribution uses a standard 28V ± 6V unregulated bus. Spacecraft components and instruments generate any required secondary voltages.

Thermal

With nearly all the space-facing surfaces covered with solar panels, the thermal design uses the nadir-facing panel for spacecraft heat rejection. Thermal blankets isolate the solar panels from the observatory. This, together with the nearly constant temperature of the Earth in the relevant infrared bands, provides the advantage of minimal diurnal variation in spacecraft component temperatures. A thermostatically controlled heater system protects the propulsion system and provides survival heat to instruments and spacecraft components. During nominal operation, temperatures are controlled passively by the nadir-facing radiators.

Command and Data Handling

The command and data handling (C&DH) subsystem provides instrument and spacecraft data management, data storage, command and telemetry management, spacecraft sensor monitoring, fault detection and correction logic, and a processor for C&DH and attitude control software. Internal communications are performed on a standard 1553 data bus. Ground communications conform to the CCSDS standards.

The spacecraft generates about 1.6 Gb of combined science and housekeeping data per day. The solid state recorder is sized to provide at least two days' worth of storage. The moderate attitude knowledge and control requirements and the low peak and orbit-average data rates are easily handled by modern microprocessors.

RF Communications

The fixed spacecraft attitude and low orbit altitude permit a straightforward communications subsystem design. Omnidirectional antennas are placed on the nadir and zenith faces. Together, these provide better than 90% of 4π sterradian coverage. This configuration provides ample margin for the 2 kbps uplink. A 3 W transmitter supports a normal downlink rate of 2 Mbps to an antenna at least 5m diameter. One days' data can be downlinked in about 12 minutes. The spacecraft also supports a much lower contingency downlink rate that increases the link margin, thereby further improving the antenna coverage and permitting the use of smaller ground antennas.

Propulsion

The propulsion system consists of a standard monopropellant hydrazine blowdown system. The system provides 30kg of propellant for orbit raising, enough to supply five years of drag make-up using conservative atmospheric density assumptions. Four thrusters are placed on the aft spacecraft panel pointed in the aft direction. The thrusters are canted slightly to provide three-axis attitude control. A system block diagram is shown in Figure 6.

Flight Software

All spacecraft software is hosted on a single processor. Given the modest system requirements, this is not expected to pose a significant design challenge. Spacecraft software is written in C using the VxWorks operating system.

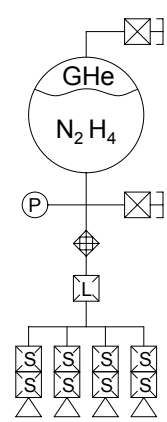

Figure 6: I-TSP Propulsion Subsystem Block Diagram

Concept of Operation

Operation of the I-TSP spacecraft is relatively simple. The instruments are operated continuously and take data at a near-constant rate. The spacecraft is designed to support occasional high-rate burst modes. Mission operations will be managed from a Mission Operations Center (MOC) located at JHU/APL. The MOC provides all spacecraft housekeeping and management. The I-TSP instruments are controlled by Payload Operations Centers (POCs) located at the Principal Investigator's facilities. The POCs send command scripts to the MOC on a regular basis for routine instrument commanding.

Level 0 science and instrument housekeeping data is sent from the MOC to the POCs for processing. The MOC will support two passes per day. The goal is to transition to "lights-out" operation for at least one pass per day.

A Science Operations Center coordinates all science activities. This includes allocation of burst mode operation, selecting the MLT separation, and performing trade-offs between the operational altitude and the mission life.

Radiation Belt Storm Probes

Mission Summary

The RBSP mission involves two identical spacecraft in low inclination, highly elliptical orbits. The inclination must be 18° or less, with a 12° or lower goal. Perigee is at 500km with apogee at 30,600km, which corresponds to a radial distance of 5.8 Earth radii. The two spacecraft are placed in orbits with slightly different periods so that one spacecraft completes a "lap" with respect to the other every few months.

The two spacecraft are launched together on a Delta II 2425-9.5 launch vehicle directly into the target orbit. After deployment, each spin-stabilized spacecraft will precess its spin axis normal to the ecliptic plane using cold-gas thrusters and traditional sun-phased rhumb-line precession. The spacecraft will then slowly deploy long wire electric field wire booms, while the cold gas propulsion system is used to maintain a near-constant spin rate as the spacecraft moment of inertia grows. The spin-up thrusting is phased to raise the orbit perigee and provide the desired "lap" rate between the two spacecraft.

The RBSP spacecraft life is constrained by the severe radiation environment encountered in the selected orbit as indicated by the dose-depth curve in Figure 7. Due to the mission cost limitations, a two-year satellite design life has been selected. Since a central purpose of the Geospace storm probes is to make simultaneous measurements of the connected radiation belt and ionosphere-thermosphere regions, it is important to maximize the time in which both the I-TSP and RBSP spacecraft are operational together. However, the current funding profile constrains the RBSP launch to be 12 to 18 months after the I-TSP launch. This nominally will provide 18 to 24 months of concurrent operation of the Geospace storm probes. The cost constraints also force the RBSP spacecraft to be predominantly single-string.

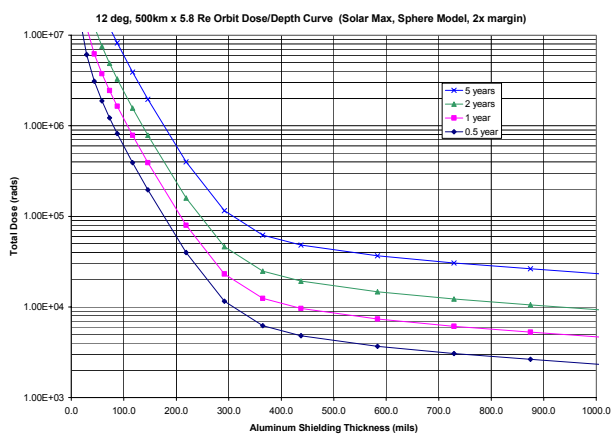

Figure 7: RBSP Radiation Dose-Depth Curve

Measurement Requirements

As with the I-TSP science investigation, the GMDT developed three sets of RBSP measurements, Core, Baseline, and Augmentation. These requirements are listed in Table 6.

Based upon these requirements, the formulation team developed a strawman payload to satisfy the Core measurement requirements. These instruments, together with the mission concept, were used to establish spacecraft performance require-

ments, which are described in the following sections.

Table 6: RBSP Measurement Requirements

Core
Radiation belt electrons
Vector magnetic field
Ring current particles
AC magnetic fields
DC/AC electric fields
Baseline
Radiation belt ions
Inner belt protons
Low-energy ions and electrons
Energetic neutral atom imaging (on a separate high-altitude, high-inclination spacecraft)
High-energy electrons and protons (on a low-altitude, high-inclination spacecraft—I-TSP is a viable candidate)
Augmentation
Add third axis to electric field measurements

The resulting instrument accommodation requirements are summarized in Table 7. The mass estimates include an allocation for shielding of instrument electronics. The instrument mass and power estimates are based upon existing or previously flown instruments, so they are conservative compared to what can be accomplished using state-of-the-art technology. The data rates are derived from the measurement frequency needed to achieve the core science objectives. Due to the early stage of the mission formulation, large margins are held for all parameters.

Spacecraft Summary

To minimize cost, the RBSP spacecraft are kept very simple. The key design drivers are summarized in Table 8.

Table 7: RBSP Instrument Accommodation Requirements

	Mass	Power	Data Rate	
			Burst	Normal
	kg	W	kbps	kbps
Instrument package	58.5	23.5	30.5	7.1
Margin	17.5	11.8	9.2	2.1
Total	**76.0**	**35.3**	**39.7**	**9.2**

Attitude Control

The RBSP attitude control system is extremely simple. Once the spin axis has been precessed to ecliptic normal and the electric field booms have been deployed, the spacecraft can meet its attitude control requirement without active control. Therefore, the spacecraft does not include any attitude control actuators or software. Spin axis precession and spin-up during boom deployment are performed by ground command of the cold-gas thrusters.

Attitude knowledge is achieved by ground processing of data provided by a combined sun sensor and Earth horizon crossing indicator. An on-board counter determines the spin phase, which is needed to time thruster pulses.

Mechanical

The mechanical configuration is driven by two factors, keeping the principal moment of inertial about the spin axis and providing sufficient solar

Table 8: RBSP Key Mission Requirements

Parameter	Value	Driver
Launch Date	Late 2009/2010	Measure during solar maximum
Mission Life	2 years	Radiation, cost
Redundancy	Single-string	Cost
Orbit	500km x 30,600km; <18° inclination (<12° goal); Slightly different orbit periods	Radiation belt coverage
Spin Axis Orientation	Ecliptic normal	E-field measurements
Spin Rate	At least 3 rpm	E-field measurements
Att. Knowledge	1°, 3σ	E-field measurements
Att. Control	5°, 3σ	
Mechanical Configuration	At least 8-sided, all sides identical	E-field measurements
Electrical Cleanliness	TBD	E-field measurements
Magnetic Cleanliness	TBD	Magnetic field measurements
Parts Reliability	Level 2	GSFC quality requirements
Availability	95%	Cost
Data return	95%	Cost

array area. The resulting design uses an octagonal structure with each of the eight sides covered with solar cells. For launch, the two spacecraft are stacked on top of one another with separation hardware between them. The stowed and deployed configurations are depicted in Figure 8 and Figure 9. The high orbit apogee makes the mission design sensitive to mass. A mass budget is provided in Table 7.

Power

Since the mechanical configuration is driven by the required array area, the spacecraft employs high-efficiency triple-junction gallium-arsenide solar cells. The array area requirement includes an allocation for shadowing by the electric field booms and any other minor protrusions from the spacecraft face.

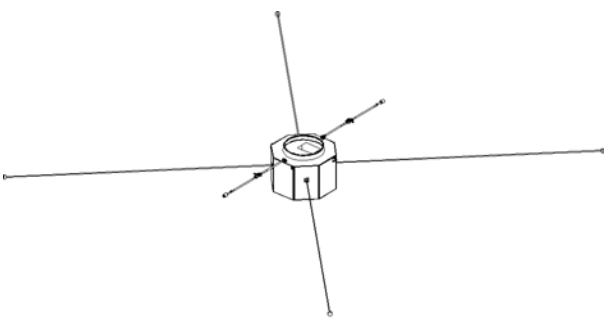

Figure 8: RBSP Deployed Configuration

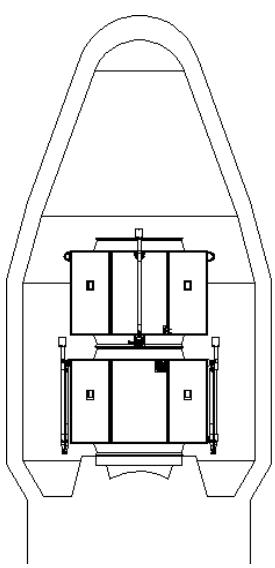

Figure 9: RBSP Stowed Configuration

Table 7: RBSP Spacecraft Mass, Power Budgets

	Mass		Power	
	Mass	**Margin**	**Power**	**Margin**
	kg	%	W	%
Instruments	76.0	30	35.3	50
Structure	65.4	23		
Attitude Control	2.4	20	0.6	20
Power	81.0	20	25.8	20
Thermal	14.4	20	22.5	50
C&DH	28.2	20	41.6	20
Harness	24.9	23	2.5	32
Propulsion	19.1	20		
Subtotal	311.5	23.3	128.3	32.1
Reserve	31.2	10.0	12.8	10.0
Total (Dry)	**342.7**	**35.6**	**141.1**	**45.3**
Propellant	15.7			
Total (Wet)	**358.4**			

The power system uses a shunt-regulated direct energy transfer topology. The battery is decoupled from the bus through a charge regulator and a boost converter. This system provides a regulated 31V ± 1V to all spacecraft and instrument components, which then generate any required secondary voltages.

The spacecraft spends most of its time in the sun; however, the worst-case eclipse can last nearly two hours out of the nine-hour orbit. A nickel-hydrogen common pressure vessel 23 A-hr cell is sufficient to meet the mission requirements. Due to the infrequency of eclipses and the short duration of most eclipses, a relatively high worst-case depth of discharge is acceptable, thereby minimizing the battery size and mass.

Thermal

With the spin axis pointed towards ecliptic normal, the sun is always impinging upon the spacecraft's octagonal sides. Either the top or bottom surface may receive a small amount of solar energy as a result of attitude offsets of the desired spin axis. Nonetheless, these provide excellent radiator viewing to deep space with a minimal view factor to Earth. Thermal blankets isolate the spacecraft from the solar panels. Together, these provide a stable thermal environment with ample heat rejection paths. A thermostatically controlled heater system provides heat during eclipse periods.

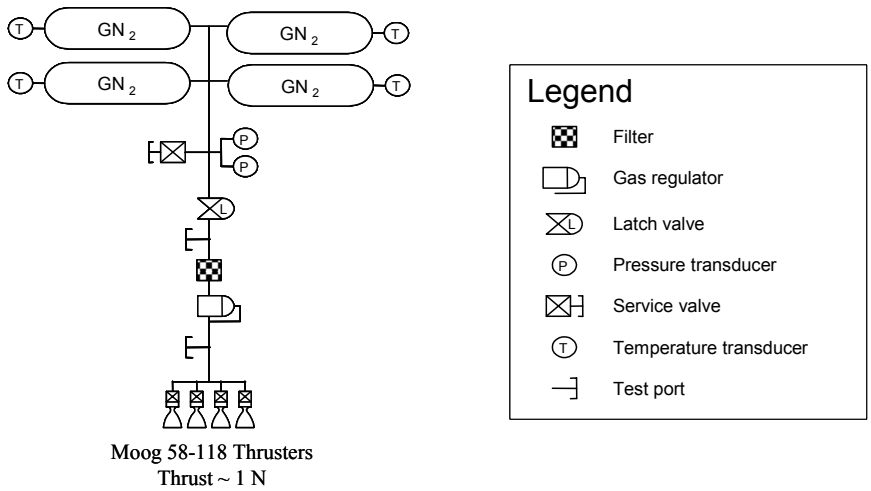

Figure 10: RBSP Propulsion Subsystem Block Diagram

Command and Data Handling

The command and data handling subsystem provides instrument and spacecraft data management, data storage, command and telemetry management, spacecraft sensor monitoring, fault detection and correction logic, and a processor for C&DH software. Internal communications are performed on a standard 1553 data bus. Ground communications conform to the CCSDS standards.

Together, the spacecraft and instruments generate just over one gigabit of data per day. The solid-state recorder is sized to hold at least two days of data. The modest C&DH requirements and the absence of attitude control software permit the use of low-end microprocessors if desired.

RF Communications

The wide variation in the orbit altitude poses a design challenge for the communications link. The selected implementation uses a pancake beam antenna that radiates most of its energy perpendicular to the spin axis. By constraining the routine downlinks to occur while the spacecraft is still relatively close to the Earth, a 5W transponder can support an 800kbps downlink to a 13m ground antenna. The orbit track roughly repeats itself every three days. In this time, the spacecraft will have about 8 passes to a low- to mid-latitude ground system totaling 14-18 hours. At 800kbps, three days' data can be downlinked in about one hour. This antenna also supports a 2 kbps uplink.

For contingency operations, a pair of omnidirectional antennas on the top and bottom faces yield near-4π sterradian coverage at any location in the orbit.

Propulsion

Although the spacecraft design is mass-sensitive, the strawman design uses a gaseous nitrogen system in a blowdown mode for establishing the spin axis and spinning up the spacecraft. This decision was made because the cost savings of the cold gas system outweighed the mass penalty. Furthermore, the propulsion system is only needed at the beginning of the mission. The spacecraft spin rate does not have a narrowly bounded maximum constraint, so the spin-up utilizes all propellant. Once the gas is exhausted, the propulsion system is no longer heated or monitored, thereby eliminating any end-of-life power requirements for the propulsion system. A block diagram of the system is shown in Figure 10.

Flight Software

Without an active attitude control system, the flight software requirements are limited to command and telemetry, data management, and fault detection and correction. The system will be written in C using the VxWorks operating system. All software is hosted by the C&DH microprocessor.

Operation Concept

The RBSP operations concept is essentially identical to that of I-TSP, except that spacecraft operations are even simpler. After the final orbits, attitude, and spin rate have been achieved, the RBSP spacecraft require only routine monitoring and housekeeping activities. An RBSP SOC will coordinate science activities, which is predominantly deconflicting use of the burst data rates and their impact on the solid state recorder.

Challenge

Rightly or wrongly, NASA has backed away from the "faster, better, cheaper" approach in favor of "mission success first." However, science missions still seek the maximum return for the investment. Mission developers are asked to deliver high quality at low cost in an environment that is now constrained by a very low tolerance for programmatic or technical risk.

As the technical descriptions for the Geospace missions show, neither the I-TSP nor RBSP spacecraft demand state-of-the-art technology. Rather, cost and cost risk are the greatest threats to the Geospace network envisioned by the GMDT. The entire network mission cost is capped at $400 million in actual year dollars.

Several small satellite builders have demonstrated an ability to develop highly capable low-cost missions. However, the challenge before the small satellite community in this case is how to apply those successes to a NASA strategic mission where the program office does not select the instruments and the quality assurance requirements, processes, and documentation requirements must be consistent with the methods and practices used by NASA's GSFC.

Acknowledgment

The authors wish to thank Mr. Robert Lebair, Jr., the NASA/GSFC LWS Geospace Mission Formulation Manager for his support in the development of this paper.

References

1. "National Space Weather Program Implementation Plan," 2nd Edition, Office of the Federal Coordinator for Meteorological Services and Supporting Research, July 2000.

2. "The LWS Geospace Storm Probes Investigations, Exploring the Extremes of Space Weather," NASA Center for Aerospace Information, NASA/TM-2002-211613, September 2002.