Utah State University
DigitalCommons@USU

CEE Faculty Publications | Civil and Environmental Engineering

1984

Solar earth-water distillation for wet sand

R. C. Peralta
Utah State University

Timothy M. Skergan

David B. Marx

Follow this and additional works at: http://digitalcommons.usu.edu/cee_facpub

Part of the Civil and Environmental Engineering Commons

Recommended Citation

Peralta, R.C., Skergan, T.M. and D.B. Marx. 1984. Solar earth-water distillation for wet sand. Transactions of the ASAE. 27(6):1690-1695.

This Article is brought to you for free and open access by the Civil and Environmental Engineering at DigitalCommons@USU. It has been accepted for inclusion in CEE Faculty Publications by an authorized administrator of DigitalCommons@USU. For more information, please contact becky.thoms@usu.edu.

Solar Earth-Water Distillation for Wet Sand

Richard C. Peralta, Timothy M. Skergan, David B. Marx
ASSOC. MEMBER
ASAE

This article is reprinted from the TRANSACTIONS of the ASAE (Vol. 27, No. 6, pp. 1690–1695, 1984)
Published by the American Society of Agricultural Engineers, St. Joseph, Michigan

ABSTRACT

SOLAR earth-water distillation is a means of extracting moisture from an earth medium. Three designs of the hot-box type of solar earth-water still were tested using wet or saturated sand. The designs included: low height with reflective interior siding, tall height with reflective siding and tall height with absorptive siding. The daily volume of distillate from the different designs was compared. A twenty-centimeter-tall still with reflective siding produced significantly greater yields than one twice as tall. No significant difference in the yield between tall stills with light-absorptive versus light-reflective interior siding was found. A regression equation was developed to predict water production for a low still with reflective siding and a sixteen-degree cover slope. Independent variables included soil moisture, solar radiation and maximum and minimum daily temperature.

INTRODUCTION AND LITERATURE REVIEW

Solar distillation is commonly used to purify an existing volume of water. However, the discrete volumes needed as input to that process are not always available. There are many cases in which the only available moisture is held within a soil matrix. A similar, yet different process, solar earth-water distillation, is potentially useful for such situations. It is a means of extracting moisture from the soil by evaporation. After condensing on a smooth surface the moisture is collected for use.

Solar earth-water stills have been proposed as a means of supplying water for survival in the desert. A survival still is quite simple—a hole dug into the ground covered with a piece of clear plastic (Fig. 1a). The edges and center of the plastic are weighted and a collection vessel is positioned under the low point of the plastic (Jackson and Van Bavel, 1965).

Probably to achieve increased durability and hygiene, the hot-box type of solar earth-water still was subsequently developed (Fig. 1b). This type of earth-water still is comprised of a rectangular wooden frame covered by an inclined glass lid. When set on the ground, the soil surface constitutes the still's bottom. Such a still could potentially be used for providing domestic water from soil moistened by rainfall, wastewater or capillary action. Hot-box stills resemble common solar stills in some ways. Appropriate note of similarities and differences between solar stills and solar earth-water stills is made in subsequent paragraphs.

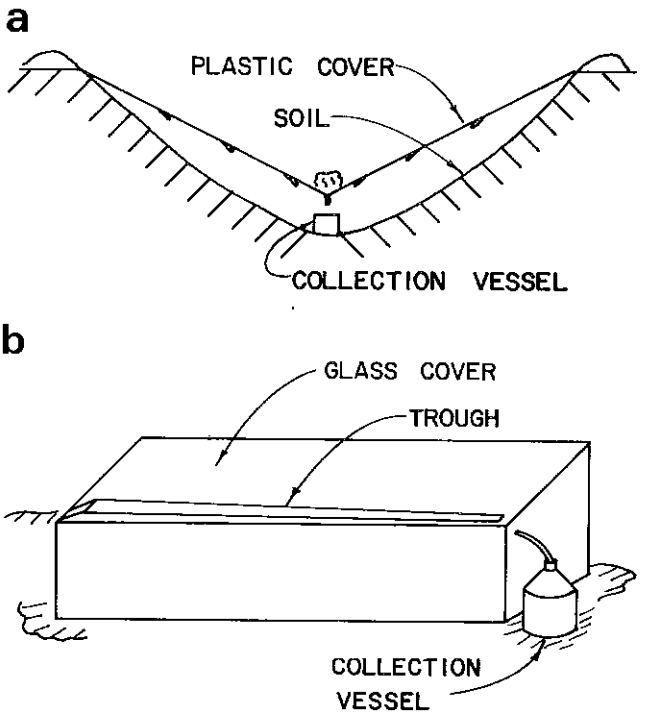

Fig. 1—Diagram of the a) Survival, and b) Hot-Box types of solar earth-water stills.

Like other solar stills, earth-water stills function because of the greenhouse effect. Solar radiation enters the still through the glass surface. The more nearly perpendicular the glass is to the incoming radiation, the greater will be the amount of radiation entering the still. The heating of the soil surface by solar radiation during the daytime and the cooling of the glass by the outside air cause the soil surface to be warmer than the glass. This results in temperature and vapor pressure gradients and the attendant mass transfer. The moisture vaporizes into the circulates within the enclosed air space. It condenses on the cooler still surfaces, especially the glass cover, during the day but also during the night.

A significant difference between solar and solar earth-water stills is that in solar stills, water evaporates from a free surface, while in solar earth-water stills, evaporation is from a moist soil. For a given water temperature and air vapor pressure within a solar still, the maximum possible pressure gradient will exist to promote evaporation. In solar earth-water stills, moisture held in the soil matrix must rise by capillarity or diffuse as a vapor through interconnected pore air spaces in order to reach the soil-air interface. At the soil surface, the evaporative potential is reduced by adhesion to soil

Article was submitted for publication in May, 1983; reviewed and approved for publication by the Soil and Water Div. of ASAE in April, 1984.

The authors are: R. C. PERALTA, Assistant Professor, T. M. SKERGAN, Graduate Research Assistant, Agricultural Engineering Dept., and D. B. MARX, Associate Professor, Agricultural Statistics, University of Arkansas, Fayetteville.

Acknowledgment: The financial support of the Arkansas University Agricultural Experiment Station and the Research and Sponsored Programs Office is gratefully acknowledged.

 © 1984 American Society of Agricultural Engineers 0001-2351/84/2706-1690$02.00

particles and cohesion and surface tension within the soil interstices. Thomas (1923), who graphed the depression of the vapor pressure versus moisture content for sand and other soils, found that the soil moisture vapor pressure is near that of a free water surface when the moisture content of the surface soil is greater than about 9%. Unfortunately, in an earth-water still, the top soil grains dry somewhat during the day, reducing the moist surface area available for evaporation. Furthermore, when soil near the surface is warmer than underlying soil, the resulting vapor pressure gradient will cause diffusion toward the lower temperature and away from the soil-air interface.

It is commonly known that solar stills with low side-wall height produce greater yields than tall stills. The bottom of a standard solar still is parallel to its transparent cover. Fig. 1b shows that this is not the case for earth-water stills. The earth-water still clearly has more enclosed volume and interior surface area exposed to the sun than a solar still of comparable collection area. Thus heat and moisture transfer patterns in the enclosed air space differ for the two types of stills. Therefore it was hypothesized that a larger enclosed volume may make available increased water vapor during the night and that increased total distillate yield may result for tall earth-water stills than for low ones.

In addition to still height, the type of interior siding may also affect still yields. Radiation striking light-reflective sides may be reflected to the soil surface, thereby heating it and increasing the evaporation rate. Radiation striking light-absorptive sides causes the heating of the enclosed air, thereby increasing its moisture-holding capacity. Absorptive interior sidings are preferred for solar stills. It was not known whether the same would be true for solar earth-water stills because of the effect of the soil surface and enclosed air volume on thermal and mass transport patterns.

Several researchers have reported the yields they obtained from their solar earth-water stills. The survival still presented by Jackson and Van Bavel (1965) yielded a maximum of about 1.5 L/m^2 per day. Kobayashi (1963), who studied the hot-box type of solar earth-water still as a means of purifying water contaminated with radioactive fallout, obtained a maximum daytime yield of 1.1 L/m^2. The nighttime yield was constant at 0.2 L/m^2. Kobayashi did not report the number of consecutive days for which these yields were obtained at the same location. Ahmadzadeh (1977), the only researcher to report the effects of initial soil moisture content on the yield of a hot-box type of earth-water still, obtained daily yields of 1.45, 1.5 and 1.7 L/m^2 for initial moisture contents of 11, 12 and 13% respectively. The yield decreased to a constant 0.15 L/m^2 per day after 11 days. Neither Kobayashi nor Ahmadzadeh mentioned the absorptivity of the interior siding of their stills. The literature review revealed no design criteria, no data for stills operating at or near saturation and no methods for predicting distillate yield from solar earth-water stills.

This study was designed to investigate the effects of still height and of light-reflective versus light-absorptive interior siding on yields of solar earth-water stills. The yield of a tall still with light-reflective interior siding is compared to that of a tall still with light-absorptive interior siding, and the yields of two stills with light-reflective interior siding, one taller than the other, are compared. An empirical relationship between the daily yields of water from a solar earth-water still and solar radiation, ambient maximum and minimum temperature and initial soil moisture content (i.e. content at the beginning of a daylight period) is also presented.

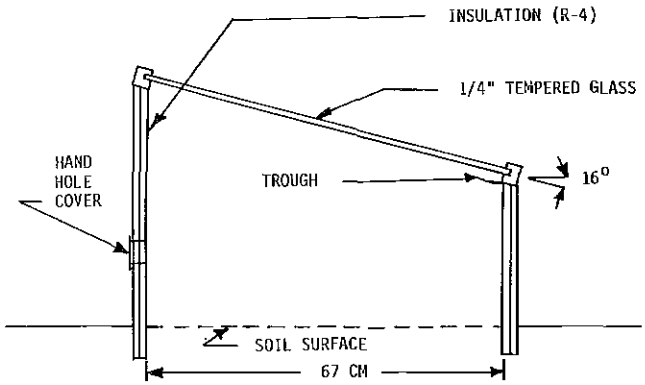

Fig. 2—Cross-Section of solar earth-water still used in the study.

METHODS AND MATERIALS

Three insulated hot-box solar earth-water stills were constructed (see Fig. 2). Each had a collection surface of two-thirds square meter glass (67 cm x 100 cm). It was judged best to use cover slopes as close to the normal of the incoming solar radiation as possible. Sixteen degrees is the average of the sun's zenith angle at solar noon between April 29 and August 18 at Fayetteville, AR (Latitude 36 °). Therefore, the stills had a 16-deg cover slope.

The designs incorporated the attributes of low or tall height (20 or 40 cm from the center of the cover glass to the earth, respectively) and light-absorptive or light-reflective interior siding (flat black paint or aluminum foil, respectively). The light-absorptive and light-reflective sidings were compared for the high stills; and the high and low stills were compared using reflective siding. Table 1 summarizes the time periods for which each still was tested and from which data were used in comparing the designs.

Distillate yields would probably vary depending on the soil used in a still. However, in this study a medium sand was used because it is readily available worldwide. The particle-size distribution is given in Table 2. The saturated moisture content of the sand on a dry-weight basis, determined gravimetrically, was 24%.

Based on the previously mentioned work by Thomas (1924), soil moisture contents greater than 9% were of interest in this study. Initially, the soil in the still was thoroughly wetted using a low pressure hose. Subsequently, the yield (production of distillate) was weighed daily between 8:00 and 8:30 a.m. for each of the three stills. At the same time, the soil moisture content

TABLE 1. PERIODS OF TESTING OF THE DESIGNS

Design	June 10 to Aug. 13	Aug. 20 to Sept. 22
Low reflective	----------	----------
High reflective	----------	
High absorptive	----------	

TABLE 2. PARTICLE SIZE DISTRIBUTION OF SOIL USED IN STUDY

Separate	Particle size, mm	Mass percent, %
Very coarse	2.00 – 1.00	4.4
Coarse	1.00 – 0.50	9.9
Medium	0.50 – 0.25	68.4
Fine	0.25 – 0.10	17.0
Very fine	0.10 – 0.05	1.2

(MC) was determined gravimetrically on the dry-weight basis from samples taken from the 0 to 3 cm depth. Over a period of days or weeks the evaporative soil layer dried. The rate at which drying occurred depended primarily on distillate production and the rate and direction of water movement between the evaporative soil layer in the still and the surrounding soil mass. Some moisture probably entered the stills during rainfall events. When the soil dried below the desired limit it was again thoroughly wetted.

The solar radiation data was collected by a horizontally mounted pyranometer located 0.4 km away from the earth-still site. These values were adjusted to correct for the geometry of the sun's zenith angle at solar noon and the still's cover angle. The result was the radiation component normal to the still cover (SR). The ambient temperature was measured 45.7 cm above the ground using a copper-constantan thermocouple. Daily maximum (TX) and minimum (TN) temperatures were recorded.

RESULTS AND DISCUSSION

The collected data are shown in Appendix A. The four independent variables and all of their cross-products and squares were utilized in a regression analysis. As a group, only the linear terms were shown to be significant predictors of yield at the 5% confidence level. Hence, cross-product and quadratic terms were eliminated from further consideration.

Data was collected for the low reflective still during two different time periods. It was previously mentioned that the 16 deg slope for the cover glass was selected as being most nearly perpendicular to incoming solar radiation in the test period from June 10 to August 13. A greater slope (about 30 deg) is more appropriate for the second period of testing, August 20 to September 21. Since the 16 deg slope was used in this period as well as the first, it was initially hypothesized that the same predictive equation may not be appropriate for both time periods. T-tests at the 5% confidence level indicated that the values of the independent variables were significantly different during the two periods. Analysis of covariance however, showed that water yield response to the variables was the same in each period. Furthermore, after adjusting the independent variables to a common value, a t-test showed that the least squares yield means were not significantly different. Therefore, the data from both periods could be treated as a single period. This was done in all subsequent analyses.

Table 3 shows the range of recorded values for the significant variables and the resulting yields for three stills. Only that component of the solar radiation which was perpendicular to the 16 deg slope of cover glass is reported. The table shows the distillate yield in $g/m^2 \cdot day$. Clearly the low reflective still gave the highest average yield, 1390 $g/m^2 \cdot day$ versus 752 and 884 for the tall reflective and tall absorptive stills, respectively. However, the mean values for the environmental parameters also differed from still to still. In particular, the tall reflective still had the lowest yield, but also the lowest average soil moisture and solar radiation.

T-tests were performed to evaluate the significance of the difference of the variables' average values between the stills. First, data for the two tall stills were compared. The t-test showed that yields were not different at the 10% level of significance. Of the independent variables, only moisture content differed significantly at the 5% level. As one would expect, when the independent variables were statistically adjusted to common values for both stills, no significant difference in distillate yield was found.

The data for the two reflective stills were also compared using the t-test. Yields and soil moistures were significantly different at the 5% level. A least squares mean analysis was performed in which the soil moisture and the other independent variables were adjusted to a common value for both stills. The yields were still significantly different, even at the 1% level. Therefore, the low reflective still clearly gave greater yields than the high reflective still.

An analyses of variance table was used to evaluate the effect of regressing the independent parameters on the yield of each still (Table 4). Table 4 shows that MC and TX were the only significant variables for the tall absorptive still at the 5% confidence level. TX was the only significant parameter for the tall reflective stills. MC was not shown to be a significant affector of yield, probably because the observed soil moisture was significantly less than it was in the absorptive still. When

TABLE 3. RANGE AND AVERAGES OF ENVIRONMENTAL DATA AND DISTILLATE YIELDS

Still design		Moisture content, %	Solar radiation,*† $kJ/m^2 \cdot day$	Maximum temperature, °C	Minimum temperature, °C	Distillate yield, $g/m^2 \cdot day$
Low, reflective	Range	9.9 – 23.0	2755 – 26682	15.1 – 36.2	3.3 – 24.6	792 – 2019
	Average	16.9	17367	30.7	19.1	1390
Tall, reflective	Range	9.2 – 15.0	2755 – 25918	27.9 – 36.2	19.2 – 23.1	492 – 973
	Average	12.3	15063	31.8	20.9	752
Tall, absorptive	Range	9.1 – 24.0	2755 – 25918	24.4 – 36.2	16.2 – 25.1	459 – 1453
	Average	15.2	16245	32.0	21.5	884

* Normal to glass cover on the still.
† Sun's zenith angle at solar noon ranged from 10 to 35 deg.

TABLE 4. ANALYSES OF VARIANCE FOR THREE STILLS

	Source	df	Type IV sum of squares	F	Significance level
Low, reflective still	MC	1	523947	9.47	0.01 *
	SR	1	654172	11.83	0.01 *
	TX	1	96090	1.74	0.20
	TN	1	77169	1.40	0.25
	Error	29	1604203		
Tall, reflective still	MC	1	14790	2.03	0.21
	SR	1	1608	0.22	0.65
	TX	1	56707	7.78	0.04 *
	TN	1	19148	2.63	0.17
	Error	5	36430		
Tall, absorptive still	MC	1	143791	5.56	0.03 *
	SR	1	5529	0.21	0.65
	TX	1	678265	26.24	0.01 *
	TN	1	40655	1.57	0.22
	Error	23	594455		

* Variables significant at the 5% confidence level.

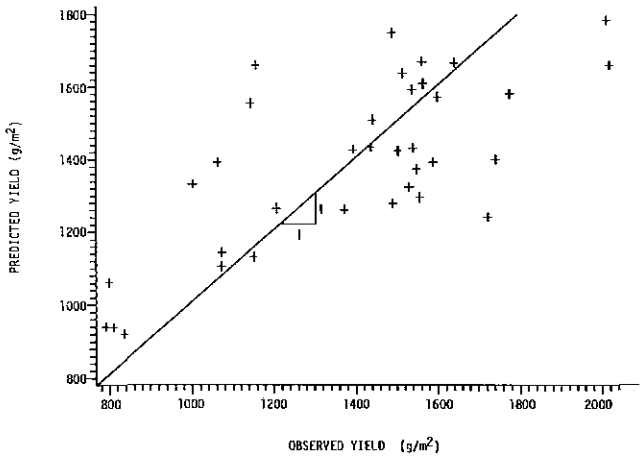

Fig. 3—Predicted vs. observed yields from a low reflective solar earth-water still.

data from both tall stills were treated as a group, TX was the only significant parameter. For the low reflective still, MC and SR were significant.

A predictive equation was developed for each of the stills. The models are of the following form:

$$Y = (Cmc)\ MC + (Csr)\ SR + (Ctx)\ TX + (Ctn)\ TN + I$$

where: Cmc, Csr, Ctx and Ctn are the coefficients associated with the variables moisture content, solar radiation and the maximum and minimum temperatures, respectively, and I is the intercept. Values of the coefficients are found in Table 5. As an example, the predictve equation for the low reflective still is:

$$Y = -(32.3)\ MC + (0.022)\ SR + (28.9)\ TX - (24.4)\ TN + 1136$$

A plot of predicted versus observed yields for that still is shown in Fig. 3.

Although not all variables are signficant at the 5% confidence level, for consistency, all coefficients are included in Table 5. These equations may appropriately be used for locations and periods when the environmental conditions are similar to the ranges found in Table 3 and when the sun's zenith angle at solar noon is between 10 and 35 deg.

The effects of the environmental variables on the yield determine the signs of the coefficients in Table 5. The low reflective and tall absorptive stills both showed a decrease in yield with an increase in soil moisture. This may be due to the fact that the specific heat capacity of dry sand is 0.195 kcal/kg·°C, whereas that of water is 1.0 kcal/kg·°C. The greater the moisture content of the sand mass, the greater will be its heat capacity and the energy required to raise its temperaure. (Recall that the equations are for soil moisture contents greater than or equal to 9%.) The result is that more heat is required to cause a certain amount of vaporization at 20% than at 9% soil moisture. The high, reflective still showed the opposite effect, probably because the data were collected under drier conditions than the other stills (see Table 3).

An increase in solar radiation had a significant positive effect on the yield of the low reflective still. This is to be expected since solar radiation provides the main driving energy for evaporation of the soil moisture. In the tall stills however, where less of the radiation could directly reach the soil, its effect was not important (i.e. the coefficients were not significantly different than zero).

An increase in daytime temperature, of course, will increase evaporation from any unenclosed moist soil

TABLE 5. COEFFICIENTS AND STANDARD ERRORS OF EQUATIONS USED TO PREDICT YIELD ($g/m^2 \cdot day$)

Still design	Moisture content, % Wgt	Solar radiation, kJ/m^2	Maximum temperature, °C	Minimum temperature, °C	Intercept	R^2	Range of the standard error of the mean of predicted yields, $g/m^2 \cdot day$
	Other variables						
	Coefficients (Standard error of estimate)						
Low, reflective	-32.3* (10.5)	.022* (.006)	28.9 (21.9)	-24.4 (20.6)	1136 (443)	0.55	40.3 - 151.7
Tall, reflective	26.6 (18.6)	.003 (.006)	38.1* (13.6)	-40.8 (25.2)	23.7 (775)	0.86	27.0 - 71.6
Tall, absorptive	-18.1* (7.7)	-0.002 (.005)	71.0* (13.9)	-25.0 (19.9)	-537.8 (387)	0.70	30.4 - 113.9

* Variables shown to be significant in Table 4.

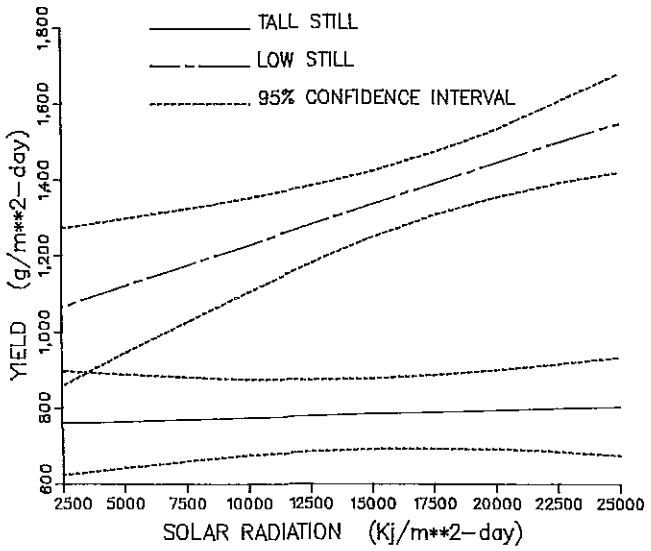

Fig. 4—Predicted yields and confidence intervals for low and tall solar earth-water stills at 16.9% soil moisture content and maximum and minimum daily temperatures of 30.7 and 191.1 °C.

surface. Table 5 shows that an increase in maximum temperature significantly increased yields in the tall stills. However, no significant increases occurred for the low still.

Probably, any decrease in nighttime temperature increases the difference in temperature between the still air and the outside air, increasing condensation during the night. However, the decrease in nighttime temperature was not great enough to increase yields significantly.

It was previously pointed out that the low, reflective still had significantly greater yields than the tall, reflective still, even after adjustment for differences in independent-variable values. To give the reader a graphic feel for the difference in yields, Fig. 4 was prepared. It displays predicted yields and 95% confidence intervals for the low and tall stills. The yield for the low still was estimated using the coefficients in Table 5. Tall-still yield was predicted using coefficients developed by treating data from both tall stills as a single group. These were −6.6, 0.002, 59.5, −12.4 and

APPENDIX A

ENVIRONMENTAL DATA AND DISTILLATE YIELDS FOR THREE DESIGNS OF 1-m^2 STILL

Date	Solar radiation,* kJ/m^2 · day	Temperature, °C Max	Temperature, °C Min	Yield*, soil moisture content (g/m^2 · day), (% by weight): Low, reflective still		High, absorptive still		High, reflective still	
06/26/81	4673	32.2	18.7	1003.5	11.4				
06/27/81	4455	31.8	20.1	1491.0	11.7	1068.0	18.8		
06/28/81	5200	34.2	20.2	1743.0	10.2	1110.0	13.0	844.6	9.3
06/29/81	11973	33.7	21.4	1443.0	9.9	1098.0	14.8		
07/01/81	11136	31.3	20.4	1075.5	20.0	747.0	20.0	764.5	15.0
07/02/81	24446	31.2	19.7	1542.0	20.0	1005.0	19.0	972.8	15.0
07/03/81	13818	30.4	22.4	1153.5	20.0	742.5	18.0	717.0	13.0
07/04/81	5764	27.9	20.4	792.0	20.0	516.0	18.0	491.8	11.0
07/05/81	2755	28.6	19.2	810.0	19.5	463.5	18.8	558.6	9.2
07/06/81	4436	29.4	21.1	837.0	20.6	508.5	20.0		
07/07/81	.13509	29.4	22.6	799.5	21.0	609.0	24.0	535.0	10.0
07/08/81	22327	33.6	20.0	1438.5	20.5	897.0	21.0	944.5	15.0
07/09/81	25764	35.7	21.1	1518.0	17.2	978.0	17.5	850.9	13.0
07/10/81	25918	36.2	23.1	1564.5	15.3	816.0	17.7	845.1	12.0
07/11/81	19609	35.2	22.5	1540.5	13.0	1027.5	17.7		
07/12/81	21709	34.3	23.0	1642.5	10.8	891.0	15.0		
07/13/81	19455	33.1	22.6	1504.5	16.5	868.5	14.5		
07/14/81	9637	34.2	24.6	1722.0	15.3	961.5	13.7		
01/15/81	19491	35.3	22.2	2019.0	11.0	1453.5	11.9		
07/16/81	25337	35.2	21.9	2013.0	11.0	1342.5	11.1		
07/17/81	24973	34.7	24.7			1134.0	10.0		
07/18/81	25882	35.3	24.9			1167.0	9.2		
07/19/81	14227	34.8	24.5			1263.0	9.2		
07/22/81	25573	35.4	25.1			952.5	10.3		
07/28/81	16527	26.6	18.9			765.0	19.6		
07/29/81	7836	24.4	19.6			534.0	11.6		
07/30/81	6591	24.7	19.4			459.0	10.4		
07/31/81	23309	30.6	20.7			615.0	12.5		
08/04/81	20755	34.9	23.4	1159.5	10.7				
08/07/81	23218	28.4	16.2			747.0	9.1		
08/29/81	22872	31.3	20.9	1557.0	22.7				
08/30/81	22845	34.4	23.1	1549.5	21.4				
08/31/81	19500	31.8	22.3	1372.5	21.0				
09/02/81	16754	28.0	19.3	1072.5	23.0				
09/09/81	23282	29.5	13.3	1602.0	17.7				
09/11/81	22018	30.9	20.5	1146.0	13.5				
09/14/81	19855	34.6	17.5	1065.0	23.0				
09/16/81	18545	19.4	6.2	1531.5	18.6				
09/17/81	16445	15.1	3.3	1207.5	17.2				
09/18/81	26682	19.4	6.6	1567.5	14.4				
09/19/81	22438	24.1	10.7	1776.0	13.7				
09/20/81	24200	27.3	15.7	1590.0	20.5				
09/21/81	22882	31.2	17.8	1395.0	20.5				

* Solar radiation and yield values were collected for stills of 2/3 m^2 area. Those have been multiplied by 1.5 to give the values shown here.

−724.1 for Cmc, Csr, Ctx, Ctn and I, respectively. Yields were predicted for a range of solar radiation intensities, and the average values of MC, TX and TN recorded for the low still. Table 3 displays these values as 16.9%, 30.7 °C and 19.1 °C.

SUMMARY

Based on the data analyzed for each still, the following conclusions are offered.

1. The results of the comparison of the yields from the different still designs are:

(a) The adjusted yields from the tall absorptive still were not significantly different at the 5% level from those of the tall reflective still.

(b) The water production of the still with reflective interior siding and a mean height of 20 cm was greater than that for a similar still with a mean height of 40 cm. The average yields of the two stills were significantly different even after adjusting for differences in observed values of soil moisture and climatologic variables.

2. (a) Water production in the low reflective still increased significantly with increasing solar radiation and decreasing soil moisture content.

(b) Production in the tall reflective still increased significantly with increasing maximum temperature. Moisture content did not significantly affect yield, possibly because of the low average moisture content which existed in that still.

(c) Yield from the tall absorptive still increased significantly with increasing maximum temperature and decreasing soil moisture content.

3. A regression equation for a still with mean height of 20 cm and reflective interior siding has been developed and has the form:

$$Y = -32.3MC + 0.022SR + 28.9TX - 24.4TN + 1136$$

where: Y is water production in grams per square meter per day, MC is moisture content in percent by weight, SR is solar radiation perpendicular to the still cover in $kJ/m^2 \cdot day$, and TX and TN are the maximum and minimum daily temperatures in degrees Celsius.

References

1. Ahmadzadeh, J. 1978. Solar earth-water stills. Solar Energy 20:387-391.
2. Jackson, R. D., and C. H. M. Van Bavel. 1965. Solar distillation of water from soil and plant materials, a simple desert survival technique. Science 149:1377-1379.
3. Kobayashi, M. 1963. Method of obtaining water in arid lands. Solar Energy 3:93-99.
4. Thomas, M. D. 1924. Aqueous vapor pressure of soils: II. Studies in dry soils. Soil Science 17:1-18.