Product Platform Concepts Applied to Small Satellites: A New Multipurpose Radio Concept by AeroAstro Inc.

Robert Caffrey
NASA/GSFC
Code 400.0
Greenbelt, MD 20771
301-286-0846
robert.t.caffrey@gsfc.nasa.gov

Gary Mitchell
AeroAstro Inc.
20145 Ashbrook Place
Ashburn, VA 20147-3373 USA
703-723-9800
gary.mitchell@aeroastro.com

Zeno Wahl
AeroAstro Inc.
20145 Ashbrook Place
Ashburn, VA 20147-3373 USA
703-723-9800
zeno.wahl@aeroastro.com

Ray Zenick
AeroAstro Inc.
20145 Ashbrook Place
Ashburn, VA 20147-3373 USA
858-481-3785
ray@aeroastro.com

Abstract

AeroAstro Inc., with the development of their new multipurpose radio platform, has solved many of the communication problems faced by spacecraft system designers. With each new satellite application, engineering teams repeatedly address several communication requirements that are common to all satellite application. As part of a U.S. Air Force sponsored effort, AeroAstro's Space Frame initiative is implementing product platform concepts to develop a family of radios that are modular, based on standard interfaces, and use an open architecture.

The new multipurpose radio uses standard core modules that can be configured to meet a wide range of spacecraft radio applications. For example, modules for a receiver, a transmitter, a baseband processor and a power amplifier will be designed. Some of these modules will have differentiators, or selectable parameters. Once the design of these modules is mature, the design of a particular satellite radio is simply a matter of selecting the correct modules with the right parameters and interconnecting them.

The new multipurpose radio reduces the time and cost required to meet the communication requirements of multiple spacecraft applications. This paper describes the new product platform approach and some of the subsystem functions imbedded in this multipurpose radio.

Introduction

The performance and the designs of space systems change as their technology continues to improve. Clayton Christensen, a professor at Harvard's Business school, studies the evolution of industries and has observed a recurring pattern[1]. Systems are initially integrated to achieve the maximum performance, but as technology improves organizations switch to new and improved modular systems. These new modular systems may not equal the performance of integrated systems, but they meet the needs of some users. In addition, these modular systems can be reconfigured to meet multiple applications, cost less money, and require less development time.

AeroAstro Inc. of Herndon Virginia is capitalizing on the space industry's technology improvements and applying modularity concepts and product platform concepts to develop a family of radio products that can be configured for multiple applications, in shorter time, and for less money than traditional radio systems.

Modularity reduces complex systems to discrete independent pieces (or modules). Product platforms use modularity to develop multiple related products that share features, components, subsystems, and processes. Product platforms allow derivative products to be developed with more variety, shorter schedules, and lower costs[2].

Historically, space systems are developed to meet the requirements of a single mission. Weight, power, and performance were optimized to meet the needs of a single space application. The space industry however, is changing, and a number of national and international space programs are adopting product platform concepts. This paper documents the benefits of applying product platform concepts to space-based radio systems.

The focus of organizations on a single mission results in "a failure to embrace commonality, compatibility, standardization, or modularization" among the different projects or programs[2, 3]. Organizations rarely stop and examine their full spectrum of projects being developed and often make sub-optimal technical and business decisions[3, 4]. The result of this practice is a diversification of products, projects, systems, and components. Organizations often duplicate the development efforts of other organizations, thus eliminating significant benefits from economies of scale, economies of scope, or the learning curve.

AeroAstro recognizes the inefficiencies of the traditional space system develop process and is developing a series of radios that are optimized over the entire performance range and take advantage of the synergies of different applications. This family of radios is based on a single spacecraft radio core that has the potential of creating twenty-four derivative radios.

Literature Review

The following section reviews the literature on spacecraft modularity, standard interfaces, product platforms, and market segmentation grid.

Modularity

Modularity is a principle for managing complexity[5]. Modules are formed when a complex system is broken-down into discrete pieces that communicate with each other through interfaces within the architecture.

In a modular architecture each functional element is implemented in exactly one physical "chunk"[6]. This architecture allows the design of one chunk to change without impacting other modules. As technology improves and systems get smaller, the mapping of form to function changes, and chunks can be merged and functions can be combined. As long as modules reduce complexity and communicate over defined interfaces, they are still modular systems.

An integral system is the opposite of a modular system. Integral systems may have functional elements implemented in more than

one chunk, and the interfaces between the chunks may not be well defined. Integral systems generally offer higher performance than modular systems because their speed, capacity, and other characteristics are optimized and not limited by conforming to predefined interfaces or boundaries.

The benefits and costs of modular systems are important to understand when developing systems. Modularity enables products to be 1) upgraded as technology evolves; 2) improved with new subsystems from other vendors; and 3) adapted to meet other applications[6]. Each of these characteristics of modularity is also critical to implementing product platforms.

Modularity is not free; it can cost a system performance. An integral design can optimize over the entire system, but a modular design optimizes over its chunk and communicates to other modules via interfaces. Accommodating for these interfaces can cost power, mass, and performance, but for mature technology, the benefits of modularity exceed the costs[1].

Standard Interfaces

Standard interfaces are the technical specifications that ensure interoperability between different products or modules. Standard interfaces enable the independent development of modules and complementary products and services (including flight systems, test/validation systems, simulators, etc.)[7].

Interface standards are the key to maximizing the benefits of modular systems. Modules with standard interfaces are more easily and reliably developed, tested, and integrated. This is true for both the primary developer and any second source developers. Standard interfaces can be implemented with commercial components, and systems with standard interfaces can be tested with commercial test equipment.

Modules with defined, but non-standard interfaces are dependent on the organization that defined the interface for documentation and potential changes to the interface definition. Documentation, interpretation, and timing errors are greatly reduced with standard interfaces.

Standard interfaces are not free; they can cost a system performance. Standard interfaces often include features for a wide range of applications, and if a design does not need these features, it can cost power, mass, and performance. For example, the MIL-STD-1553B serial data bus is transformer isolated for added fault tolerance in military applications. Most space applications do not need this feature, and it costs significant mass, power, and volume. However, for many space applications, the benefits of commercially available flight parts and generic test equipment exceed the costs.

Product Platforms

Implementing product platforms is a method for designing multiple related products that share features, components, subsystems, and processes. Designing a product platform requires the evaluation of current and future requirements in order to develop a core platform to meet a majority of the requirements. Platforms allow derivative products to be developed with more variety, shorter schedules, and lower costs[2].

A successful product platform can produce a line of profitable products and lead to market dominance. Meyer and Lehnerd[2] define product platform leveraging strategies as the process of using elements of products developed for one market segment and performance tier in other markets and tiers. When a leveraging strategy is defined before a product is developed, it will ensure that the requirements of the other segments and tiers are considered in the original design. This will enable products to meet a wider range of customers.

The literature contains a long list of firms that have successfully developed families of products using the product platform concept. Some of these efforts include Black &

Decker's power tool products[2], Gillette's razor[2], Sony's Walkman[8], Volkswagen's A-Platform[9]; Boeing's 777[10], and more.

Meyer and Lehnerd[2] credit Black & Decker's success in revitalizing its line of power tools to three factors: 1) it avoided piecemeal, single product focus; 2) it bridged the gap between engineering and manufacturing to simultaneously redesign both products and processes; and 3) senior management made the initiative a top priority and adopted a long-term outlook on product development.

Market Segmentation Grid

A market segmentation grid is a useful tool to visualize where products fits in the market and what opportunities or challenges exist in the market[2]. Figure 1 is an example of a platform market grid. The horizontal axis represents the major market segments and each square corresponds to a customer group served by a single product. The vertical axis represents different price and performance qualities: good, better, and best. Movement up and down the axis corresponds to price and performance changes.

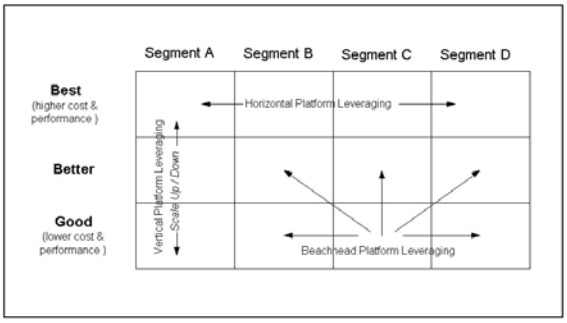

Figure 1. The horizontal, vertical, and beachhead leveraging strategies applied to the product platform segmentation grid.

Niche-Specific Platforms

In this strategy, each market niche is served by a different product platform. When one organization follows this strategy, the result is a wide range of product families that share very little, if any, technologies, subsystems, test capabilities, or manufacturing capabilities. Many space and non-space organizations suffer from this problem.

Horizontal Leverage

In this strategy (shown in Figure 1) technology or subsystems of a product platform are leveraged from one market niche to the next within the same tier of performance. Leveraging occurs if major subsystems are reused in different segments. In this strategy, standardization is critical to improve performance and reduce costs. The major benefit of this strategy is the shared R&D, subsystem development, manufacturing, and reduction in time to develop similar products.

Vertical Leverage

In this strategy (shown in Figure 1), organizations address a range of price-performance tiers within a single market segment with a common product platform. A product in the high-end may move to a lower end by removing functionality or lowering capability. To move up a tier, new technologies or subsystems are added to the product to meet the requirements of higher markets. In this strategy, organizations leverage the knowledge and capabilities from lower tiers to other tiers at a lower cost than developing a new product.

Beachhead Approach, Horizontal and Vertical Leveraging

This strategy (shown in Figure 1) combines horizontal and vertical leveraging to reach the maximum market segments and price tiers. A firm initially develops a low-end, but well-designed platform that embraces modularity and product platform design concepts. After a foothold is established, performance improvements and capabilities are added to the existing platform to make derivative products desirable to other segments and tiers. By leveraging the design and manufacturing capabilities developed in the first platform, the firm is poised to enter new market niches from a superior cost position.

Figure 2 maps a few space projects that use product platforms on a market segmentation grid. The TDRS and GOES the project are examples of niche projects that do not expand to other segments or tiers. The XTE and TRMM projects are good aerospace examples of horizontal leveraging. The attitude control system (ACS) for the XTE mission served a space science customer (or mission) that had different pointing requirements than TRMM's ACS. The TRMM ACS served an Earth science customer (or mission) and required two additional subsystems, but the core of both systems was the same[11].

The MIDEX MAP Project is a good example of vertical leveraging[12]. The MAP avionics system was initially a single-string system based on modular designs and standard interfaces. Early in the development process, the project was upgraded to a high priority mission and the new status required the avionics system with more fault tolerance (a double-string system). Since the original design was modular with standard interfaces, the transition to a double-string system was relatively low cost with a minimal schedule impact. The SMEX and IEM projects efforts are good examples of beachhead leveraging[13, 14]. In each example, a similar architecture was used in different space segments (horizontal) and different performance tiers (vertical).

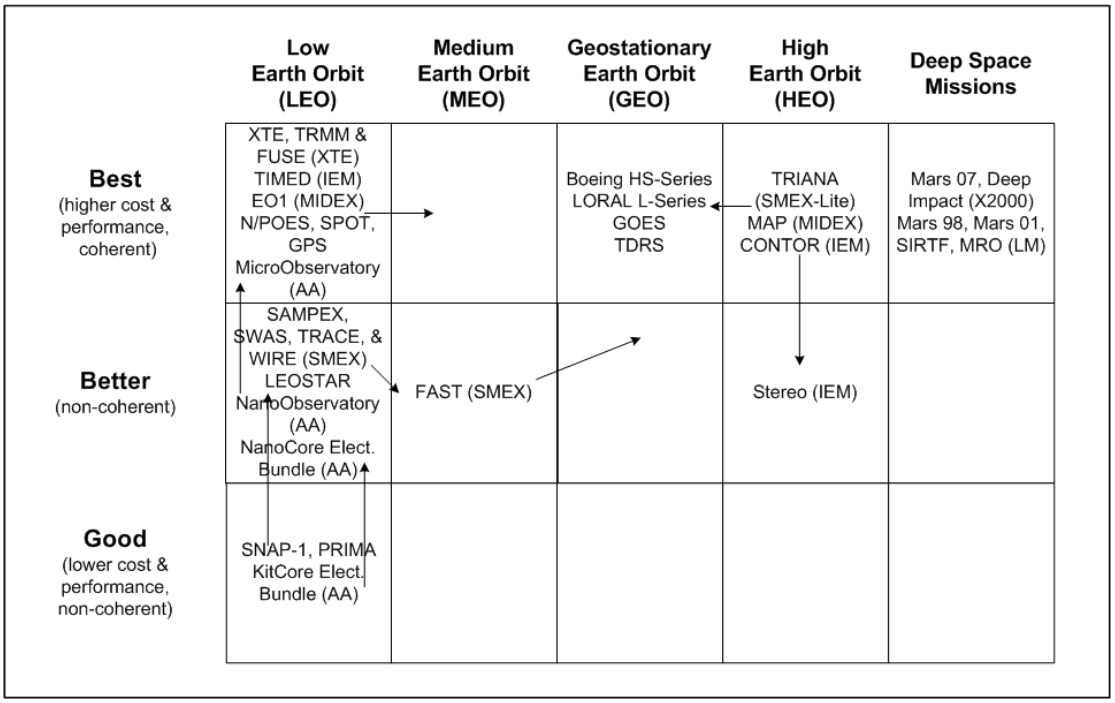

Figure 2. A Few Space Projects using Platforms Concepts

Figure 3 contains a partial list of spacecraft radio systems placed on a market segmentation grid. This grid shows the most current radios are niche-specific products and there is very little leveraging done into other market segments or performance tiers. The AeroAstro original Bitsy radio used horizontal leveraging to meet a range of low-end radio applications. The new AeroAstro product family of radios, examined in the following section, uses the beachhead leveraging strategy to leverage the same radio core into multiple projects and at multiple performance tiers.

	Low Power S-Band Radios	High Power S-Band Radios	X-Band Radios	Ka-Band Radios	Ku-Band Radios
Best (higher cost & performance, coherent)		TDRSS (Motorola) CXS-610 (L3C)	SDST (Motorola) T-712 (CE)		
Better (non-coherent)	SSTL (SS) Bitsy-SX (AA) ULDL (SA) MST-21 (SD)	Bitsy-SX (AA)	Bitsy-SX (AA)		
Good (lower cost & performance, non-coherent)					

Figure 3. A Few Spacecraft Radio Systems

The AeroAstro Product Family of Radios

Most LEO spacecraft radios are either S-Band or X-Band and S-Band radios are either low transmit power (power <1W) and high transmit power (power >5W). Another differentiating characteristic of radios is the coherent or non-coherent feature. We define coherent features later in this section.

The vendors of Low Power S-Band radios include: Surrey (SSTL S-Band), Spectrum Astro (ULDL), SpaceDev (MST-21). The vendors of High Power S-Band radios include: Motorola (TDRSS), and L-3 Communication (CXS-610). The vendors of X-Band radios include: Motorola (SDST) and Cincinnati Electronics (T-712). There are additional vendors and radios, but additional research is required to identify these products.

S-Band Transmitter and S-Band Receiver

The transmit and receive modules are used on both the SPORT and the Team Encounter programs and represent a significant reduction of mass, power, and cost to comparable radios. These modules operate in a non-coherent mode (i.e. no fixed ratio between a ground transmitter and the on board receiver and no ranging). The transmitter and receiver modules operate on +12Vdc and +5Vdc respectively. The modules will interface data, commands, and status with a data system and will interface directly to an S-Band antenna. The transmitter and receiver modules include a cross-strap option that allows the same modules to be used in either a single-string or a double-string application. For example, the cross-strap feature will enable the Transponder Link-A to communicate with either Transmitter-A or -B. In addition, Receiver-A could communicate with Transponder Link-A or -B.

Transponder Link Module

The Transponder Link Module is used on the Team Encounter programs and enables the transmitter and receiver to operate in coherent mode (i.e. a fixed ratio between the ground transmitter and the board receiver to provide ranging). The module provides the data, commands, and status interface between the data system and the S-Band transmitters/receivers. The transponder link module includes a cross-strap feature that will allow the same modules to be used in either a single-string or a double-string application. As

mentioned, the cross-strap feature will enable the Transponder Link-A to communicate with either Receiver-A or -B.

Standard Command and Data Interface

Standard interfaces decrease system complexity, reduce integration time and costs, and increase the reuse of a system. AeroAstro supports a standard interface option for the Transponder Link Module to provide interfaces for low-speed commands and status (CAN, I2C, MIL-STD-1553B/-1773, etc.) and/or high-speed data (IEEE-1394, IEEE-1355, etc.). These standard interfaces make the AeroAstro family radios compatible with existing and future NASA and Air Force programs. The standard interface module includes redundant interfaces for each standard bus. This enables the transponder to be used in multiple levels of fault tolerance applications.

5W Power Amplifier Adapter

The 5W power amplifier adapter module boosts the transmitter output from less than 1 Watt to over 5 Watts. The Amplifier module enables the AeroAstro family of radios to be used in multiple spacecraft applications.

X-Band Adapter

The X-Band adapter interfaces to the transmitter and receiver modules and converts their signals from S-Band to X-Band and from S-Band to X-Band, respectively. Again, this feature enables the AeroAstro family of radios to be used in multiple spacecraft applications.

Figure 4 is a block diagram of the product family of radios AeroAstro is developing for the SPORT, Team Encounter, and other programs.

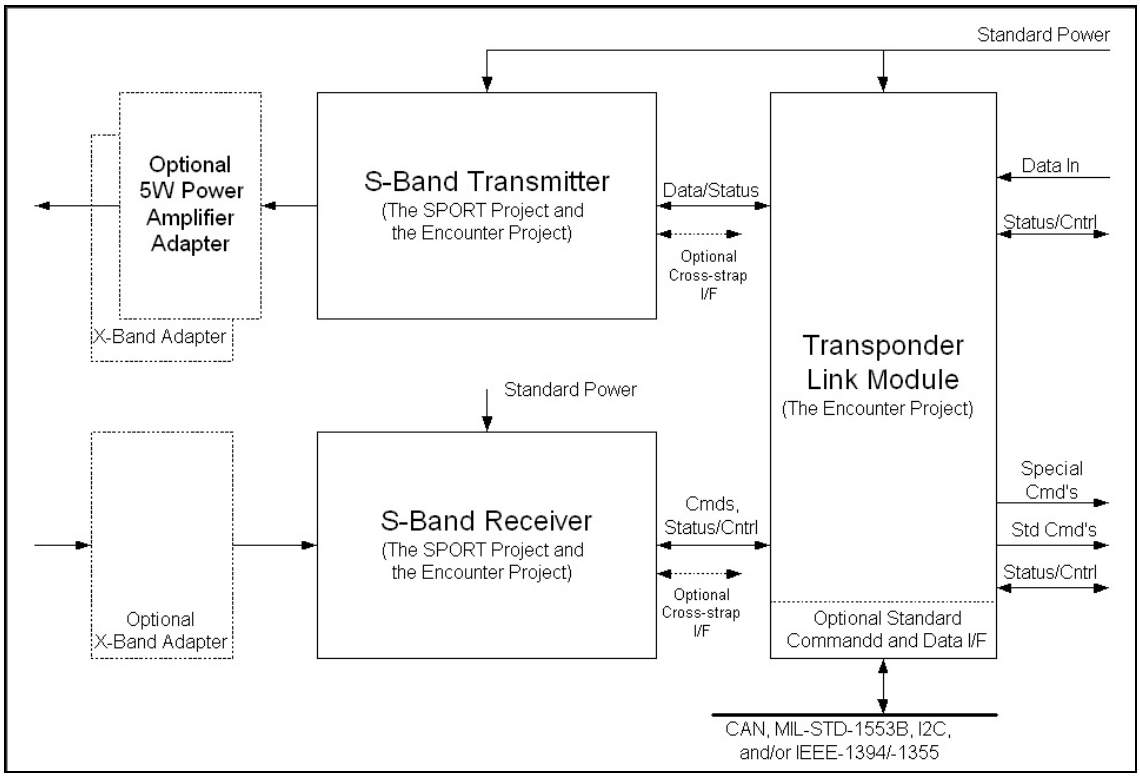

Figure 4. The AeroAstro Family of Radios

The AeroAstro family of radios is an ideal product platform that serves a wide range of customers from low-end users to high-end users. The product line includes S-Band and X-Band transmitters, receivers, and transponders for both high power and low power applications. The cross strap option of the transmitters, receivers, and transponders meet the requirements of a wide range of fault tolerant applications. In addition, the standard interface option effectively decouples the transponder from the data system which simplifies integration and reduces cost.

Product Platform Implementation

The following sections examine the themes, principles, and procedures of implementing product platforms and relate them to the AeroAstro family of radios. Spacecraft radios vary depending on performance, environment, and mission requirements, but they contain enough common elements to justify implementing product platforms and the AeroAstro family of radios provides a good example.

Product Platform Development Themes

The key to implementing a successful product platform is to design an architecture that can support multiple variations of similar products. The architecture of a product is a combination of subsystems and interfaces. Any product has the potential to develop into a product platform if its architecture is designed to support multiple derivative products. Each subsystem of a product has a specific function and when all the subsystems are combined by the product architecture, the final product has specific form, function, and characteristics. By changing, adding, or not including subsystems, derivative products adopt new functions and characteristics.

Architectural themes, principles, and insights determine the success and the life expectancy of a product platform. Meyer and Lehnerd[2], Schulz and Fricke[15], Suh[16], Lyke[17], and Caffrey[18] develop themes that address interfaces, leveraging, management, design, manufacturing, flexibility, and space issues. These following themes are reviewed and applied to the AeroAstro radio.

Theme 1 – Interfaces Standards can be Strategic

The collection of standard interfaces determines the longevity of a platform and likelihood of adoption by other projects. Standard interfaces enable organizations to develop subsystems independently with less documentation, shorter time, and fewer interface problems. In addition, by agreeing on boundaries and then optimizing the products and processes, breakthroughs are possible in manufacturing, assembling, testing, and integration.

The key to defining a successful platform, i.e. one with a long life and many derivative products, is to select the proper interfaces and subsystems to standardize and permit the others to mature as technology advances. AeroAstro selected common interfaces for the input and output signals of the different radio modules. In addition, AeroAstro plans a module to interface to a range of spacecraft standard command and data buses.

Theme 2 – Platforms should Provide Leverage

The ability of product platforms to accommodate new technologies and new subsystem variations make it possible to develop derivative products at low incremental costs. The core of AeroAstro's radio can leverage from S-Band to X-Band, from low power S-Band to high power S-Band, from single-string to double-string, and from discrete and serial interfaces to spacecraft standard interfaces. In addition, the architecture enables the radio modules to be implemented with higher quality components to meet the environmental needs of a higher performance missions. This leveraging capability allows AeroAstro to meet a wide

range of projects (i.e. market segments) and different levels of performance requirements.

Theme 3 – Platforms Must be Managed as Evolving Entities

When the platform is initially designed, the team should consider how new technology would be incorporated and how the subsystems should be partitioned. For example, the radio core allows subsystems to mature at different rates. As technology improves and one module reduces size, lowers its cost, or improves its performance, the other modules are not impacted.

Theme 4 – Include Manufacturing and Integration Requirements in Platform Design

Literature shows that integration is a major cost element of developing space systems[11, 12, 13, 14]. Therefore, to improve manufacturing and integration, include their related requirements as initial design requirements. For example, connector placement impacts wiring harness development and assembly; electronic cards should be replaceable without removing boxes from a spacecraft. AeroAstro is a small company working in integrated product teams and includes both manufacturing and integration people in the design of its family of radios. As a result, manufacturing and integration are reasonable elements of their family of radios.

Theme 5 – Form a Cross-Functional Product Platform Development Team

To optimize the platform along each discipline, the team should include members from electrical, mechanical, software, and each of the functional organization. As mentioned, the integrated product team enables the radios to be optimized not only for manufacturing and integration, but they are also optimized electrically and mechanically.

Theme 6 – Iterate the Product Platform Design Process

Repeating or revisiting the initial design steps with data gained later in the process will help optimize each of the design parameters in the final design. The AeroAstro family of radios is based on previous AeroAstro designs and experienced gained by developing spacecraft radios at other organizations. In addition, the core was designed for two different projects with different communication and performance requirements. As a result, the radio design was iterated multiple times and received multiple reviews from different people. This process created a family of radios that meets a wide range of project and performance requirements.

Theme 7 – Leadership and Sponsorship from Senior Management is Required

Space organizations are traditionally matrix organizations with splits along project and functional disciplines. Strong leadership is required to span across these different organizations, establish a vision, set priorities, and resolve conflicts. In addition, platform planning requires a long-term outlook and vision; most aerospace engineers and managers are busy solving today's problems and senior management needs to pry them away from their short-term responsibilities to plan long-term product platforms. AeroAstro is one of the pioneers in micro satellites and a leader in developing radios for micro satellites. Its managers understand the need for developing space systems quickly and inexpensively. The core of the radio was designed from the beginning to meet the needs of multiple applications and as a result a family of radios has emerged.

Theme 8 – Changeability Principles

The changeability principles applied to spacecraft systems ensure they can be configured to meet the mission requirements of different projects, market segments, and

performance tiers. These principles will also speed testing, integration, and future system upgrades. In addition, applying these principles will enable other organizations to supply complementary products. The changeability principles discussed by Schulz and Fricke[15] are the following:

Independence – This principle relates to dependence or coupling between systems. Suh's Independence Axiom states that an optimal design always maintains the independence of functional requirements[16]. There are three degrees of independence – coupled, de-coupled, and uncoupled. A design matrix should be used to map functions to design parameters to determine functional, subsystem, and system coupling.

Modularity/Encapsulation – An optimal design groups functions into modules that minimize coupling between modules (loosely coupled) and maximizing cohesion within a module (strong cohesion).

Integrate-ability – This principle is characterized by compatibility and inter-operability applying generic, open, or standard interfaces. This principle is necessary in a rapidly changing environment of interrelated modules.

Decentralization – This principle is based on a distributed system with loose coupling and strong cohesion and is critical to agility and adaptability. This principle enables systems to adapt to their environment and respond autonomously to changing requirements.

Scalability – This principle defines flexibility, agility, and adaptability. A 'changeable' architecture needs to provide the necessary capability for unrestricted increases or decreases of components/subsystems within the system. The 'unrestricted' aspect of this principle may not be realistic for aerospace systems where capability and data bus topology determine scale-ability, but the ability to scale systems up and down will enable derivative products in other aerospace segments and tiers.

These principles accelerate a product testing, integration, derivative product development, and other key elements. The AeroAstro family of radios reflects the changeability principles. The modules are not coupled and can be upgraded independently. The modules were designed to be configured to meet multiple applications and scalable to meet multiple levels of fault tolerance.

Multi-step Platform Development Process

Academic, business, and technical literature, including Meyer and Lehnerd[2], Roberson and Ulrich[19], Ulrich and Eppinger[6], Schulz and Fricke[15], and Gonzalez-Zugasti, et. al.[20], and Simpson, et al.[3] and Caffrey[18], contain processes and examples of defining, optimizing, and implementing product platforms. The following process to implement spacecraft radio product platforms is a combination of these approaches and examples.

Step 1 – Segment the Aerospace Market

Create a market segmentation grid and identify the class of projects (market segments) and priority/qualification-level (price/performance) tiers. Figure 3 is the current market segmentation grid for the space radio (or transponder) market.

Step 2 – Define and Map Current Product Platforms

Define existing projects in the grid and show how they 'play' on the market segment grid. This will help identify future product platforms. Analyze their strengths and weaknesses and determine what can be copied, borrowed, or bought. Figure 3 show the current radio products on the market segmentation grid.

Step 3 – Identify Growth Areas

Annotate the grid with current number of projects, your share of projects, a five year prediction rate, other organizations and their

niches, and the driving customer need in each niche. This new grid provides a clear picture of future opportunities.

The matrix in Figure 3 shows an area of the market that is under serviced and may represent an opportunity for AeroAstro's new family of radios. The design and architecture of its core is a low-end system that will build volume, mature technology, improve process, and expand to other market segments.

Figure 5 shows AeroAstro's new family of radios applied to the original market segmentation grid. It shows the new core radio takes advantage of the under-serviced market area and how this core will expand to other market segments and performance tiers.

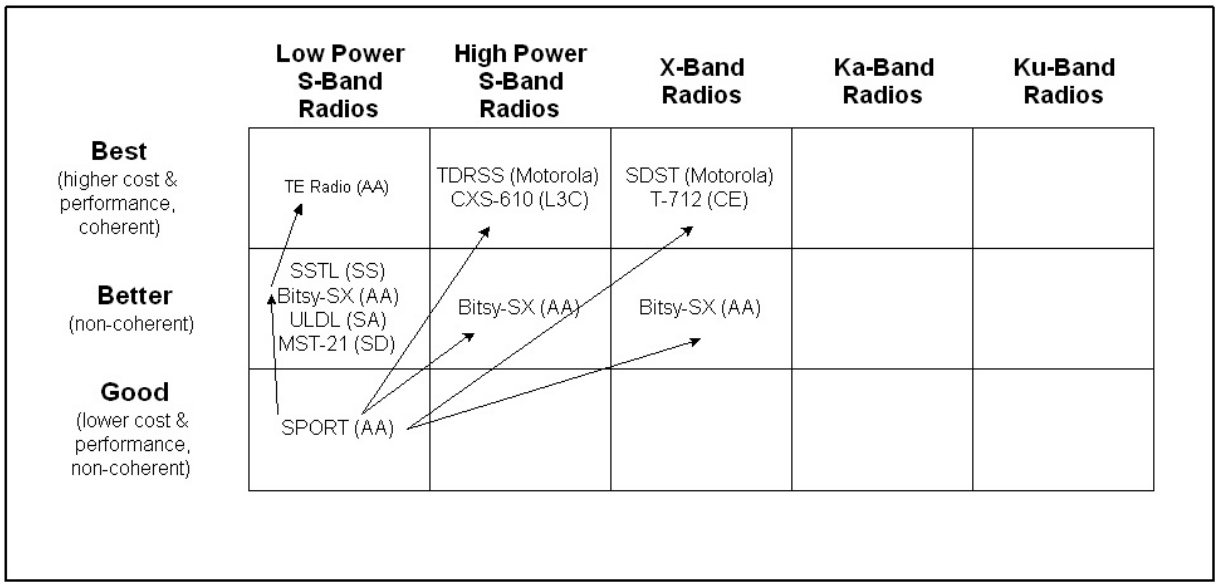

Figure 5. The Radio Market Segmentation Grid with AeroAstro New Radio

Step 4 – Perform In-Depth Research on Customers Needs

The multi-discipline team should conduct market surveys to identify the major cost and performance drivers that can make the new product superior. Create a table that reflects the high-level requirements of the different missions that may be included in the core platform. Examine the requirements and look for both overlapping requirements and requirements that are outliers. Missions with multiple requirements that are outliers may not be a candidate for the core platform.

Figure 6 represents the requirements of different projects. The core of the platform should meet the requirements of all overlapping regions (1-4). If a mission's requirements don't overlap with other requirements, it should be consider an outlier and not include in the core platform. However, if two missions are considered outliers and their requirements overlap, a second core platform should be considered.

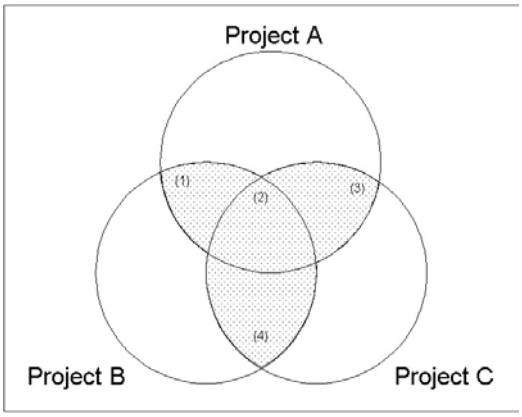

Figure 6. The overlapping requirements of different projects determine the core product platform requirements

In the AeroAstro family of radios, the S-Band Transmitter and S-Band Receiver are used in every derivative product and their requirements are represented by shaded area #2. The Transponder Link module is used in many derivative products and its requirements are represented by shaded area #3 or #4. The High Power module and the X-Band modules are only used in one derivative product and their requirements are represented by the un-shaded area.

Step 5 – Establish the Product Platform Commonality Plan, Differentiation Plan, and Manage the Trade-Offs

These plans define the common functions and differentiating functions of the product platform (functions and not physical form). The Commonality Plan represents the ways the different versions of the product incorporate the same functionality. The plan includes a matrix that lists the different functions, the number of different functions, and the different product versions. The Differentiation Plan includes a list of attributes as they relate to each potential product, and a matrix that lists each differentiating attribute along the y-axis and the different products along the x-axis. The matrix contains a description of each function and how it is different for each product. The two plans need to be examined and trade-offs made to optimize cost, performance, and differentiation. Ulrich and Eppinger[6] provide a few guidelines to manage this trade-off:

- Platform planning decisions should be made with quantitative estimates of cost and benefit implications: Use estimated cost of differentiation, cost savings of commonality, and the benefits of differentiation to make decisions.
- Iteration: Repeating the process when better data is available will help.
- The product architecture dictates the nature of trade-off between differentiation and commonality.

The commonality plan lists all functions common to the different derivative products and includes: S-Band Transmitter module, S-Band Receiver module, Transponder Link module, and Standard Interface module. The derivative products include the following:

1. S-Band Radio
2. S-Band Transponder
3. High-Power S-Band Radio
4. High-Power S-Band Transponder
5. X-Band Radio
6. X-Band Transponder

Each of these six derivative products could include the Standard Interface module which would produce another six derivative products. In the following table, these six products are numbered 7 through 12. If each of these twelve products included the cross-strapping feature, another twelve derivative products could be created. Therefore, the AeroAstro product family of radios includes at least twenty-four derivative radios all based on the same core radio, a very successful product platform.

Table 1. The Radio Commonality Plan

Radio Functional Elements	Radio 1/7	Radio 2/8	Radio 3/9	Radio 4/10	Radio 5/11	Radio 6/12
S-Band Transmitter	x/x	x/x	x/x	x/x	x/x	x/x
S-Band Receiver	x/x	x/x	x/x	x/x	x/x	x/x
Transponder Link	/	x/x	/	x/x	/	x/x
Standard i/f Module	_/x	_/x	_/x	_/x	_/x	_/x

The differentiation plan lists the functions unique to each radio and includes the high power module and X-Band modules.

Table 2. The Radio Differentiation Plan

Radio Functional Elements	Radio 1/7	Radio 2/8	Radio 3/9	Radio 4/10	Radio 5/11	Radio 6/12
High Power Module	/	/	x/x	x/x	/	/
X-Band Modules	/	/	/	/	x/x	x/x

In order to manage the trade-offs, the commonality and differentiation plans are closely examined and any component or design similarities are extracted. This next step requires more detailed design, but there are a number of options. The Standard Interface module may want to be included in Transponder Link module as more spacecraft adopt the same set of standard interfaces. The S-Band Transmitter and Receiver could be moved to the same module if there were no applications that required only one function. But thermal reasons may also drive the requirement to keep the two modules separate and this issue is raised in a later section.

Step 6 – Create a Schematic of the Product

Draw the core product platform based on its major functions and the results of the trade-offs. The schematic represents the major functions of the product, but does not include detailed performance or design information. Figure 4 contains a block diagram of the family of radios defined by the multi-application/product concept.

Step 7 – Cluster the Elements of the Schematic

Assign each design element of the schematic to a physical element or chunk (the mapping from function to form). As a guide to this mapping, consider the following factors from Ulrich and Eppinger[6]:

- Geometric integration and precision: related high-precision elements can be better controlled and integrated by one group.
- Function sharing: when a single physical element can best handle multiple functional elements, these functional elements are best clustered together.
- Capability of the vendor: when one vendor can best process multiple functional elements, these functional elements are best clustered together.
- Similarity of design or production technology: elements sharing design or manufacturing technology are best clustered together.
- Localization of change: an element likely to be change should get its own chunk
- Accommodating variety: an element likely to differentiate the product across market segments should get its own chunk
- Enable standardization: if a set of elements may be useful to other products they should be clustered together.
- Portability of interfaces: some elements have interfaces that support moving (electrical) while others don't (mechanical) and they can effect clustering.

Each of these factors should be documented with an appropriate matrix, table, or diagram so that when a design is changed, this documentation can be updated, analyzed, and unforeseen interactions detected. For example, matrices should map function to design parameter to determine coupling, and functions mapped to functions to determine grouping. If a function

changes, the coupling can be easily revisited to avoid unintended side effects.

Draw a connectivity matrix mapping functions to functions. Review the mapping and look for patterns that improve independence, reduce coupling, and increases module cohesion. The AeroAstro family of radios is already partitioned very efficiently, so no major issues are detected in this exercise. Again, the S-Band Transmitter and Receiver could be moved to the same module, but other issues may preclude that change.

Table 3. The Radio Function to Function Connectivity Matrix

Function	1.	2.	3.	4.	5.	6.
1. S-Band Transmitter			x		x	x
2. S-Band Receiver			x			x
3. Transponder Link	x	x		x		
4. Standard i/f Module			x			
5. High Power Module	x					
6. X-Band Modules	x	x				

Step 8 – Identify the Fundamental and Incidental Interactions

Subsystems react with each other in planned (or functional) and unplanned (or incidental) ways. Schematics and a proper interface control documents (ICD) should define the functional interactions and incidental interactions, but a draft incidental interaction table may be useful in the early stages of 'function to form' mapping. The table would list the functions vertically and the interactions horizontally (like thermal, vibration, or EMI). Each interaction column should have two sub columns, one for emitting and the other for susceptibility. For example, a processor subsystem may emit high levels of EMI and another subsystem may be very susceptible to EMI. Special arrangements must be made to accommodate both subsystems. This step requires detailed design information and should be completed by the cross-function platform design team.

The general fundamental interactions are addresses in the platform interface control document (ICD) and any specific issues are addressed in the derivative product ICD. The incidental interactions, like EMI, thermal, and vibration, are addressed in the ICD, and are tested as part of system environmental test process. Table 4 is the beginning of the Radio's Incidental Interactions Table that defines each subsystem's emissions and susceptibility levels.

Table 4. The Radio Incidental Interactions Table

Function	EMI		Thermal		Vibration	
	E	S	E	S	E	S
1. S-Band Transmitter						
2. S-Band Receiver						
3. Transponder Link						
4. Standard i/f Module						
5. High Power Module						
6. X-Band Modules						

† E = Emit, S = Susceptibility

Step 9 – Create a Rough Physical Layout

Draw a physical layout of the product and consider the feasibility of the subsystem interfaces. Consider the planned (functional) and unplanned (incidental) interactions of subsystems and plan the layout to minimize any problems. This step requires detailed design information and should be completed by the cross-function platform design team.

Step 10 – Analyze Alternate Platforms

The team should establish objective measure of cost and performance for each subsystem and quantify the cost and functionality of other systems. This will help determine the strengths and weaknesses of your subsystems, but it will get to you to re-focus engineering or begin the process of buying or teaming with another organization. The team should review the mapping from function to form by the

different projects and determine if there are addition benefits to be realized if the mapping was done differently.

We have already defined twenty-four derivative products include

1. S-Band Radio
2. S-Band Transponder
3. High-Power S-Band Radio
4. High-Power S-Band Transponder
5. X-Band Radio
6. X-Band Transponder

Six more derivative products are defined by including the Standard Interface module and another twelve products are defined by including the cross-strapping feature. It's hard to imagine different mapping or additional products, but the process should be examined more closely.

Step 11 – Formulate the Platform Development Team, Project Schedule, and Budget

The multi-functional design team must specify the internal and external needs to develop the platform including engineering, manufacturing, finance, and operations. This is when senior management is critical. The development of a new product platform needs good people, but good people are usually busy with the current work. Senior management needs to have the vision and leadership to see that an effective product platform can lead to future growth and success. In addition, the design team must establish credible cost, schedule, and performance goals that the team periodically measures and evaluates.

Closing Remarks

The nature of spacecraft systems creates special strategic, technical, and organizational challenges for the implementation of product platform concepts. For example, the project cycle for many space missions is longer than the industry's technology cycle. As a result, improved technology is often available by the time a project is completed, thus thwarting the reuse of components, subsystems, and systems. Low volumes limit the incentive for organizations to make copies of the same system in order to benefit from economies of scale, economies of scope, and the learning curve. The harsh space environment stipulates that systems must operate over extreme temperature ranges, under vacuum, and exposed to radiation. This necessitates the development of high reliability parts and processes. The combination of the above characteristics, make space systems very expensive. Given high-costs, low-volume, and long development cycles, the competition among organizations is fierce. Despite these conditions, AeroAstro, using a modularity and product platform concepts, developed a spacecraft radio core that has the potential of creating twenty-four derivative products.

References

1. Christensen, Raynor, and Verlinden (11/01), "Skate to Where the Money Will Be", Harvard Business Review
2. Meyer H. and Lehnerd A. (1997), *The Power of Product Platform: Building Value and Leadership*, The Free Press
3. Simpson, T. W., Maier, J. R. A. and Mistree, F. (2001) "Product Platform Design: Method and Application," *Research in Engineering Design*, Vol. 13(1), pp. 2-22.
4. Mather H (1995), "Product variety – friend or foe?", Proceedings of the 1995 38th American Production & Inventory Control Society International Conference and Exhibition, Orlando, FL, October 22-27, APICS, pp 378-381
5. Langlois R. (1999), "Modularity in Technology, Organization, and Society," *Austrian Economics and the Theory of the Firm*

6. Ulrich, K.T. Eppinger, S.D.(2000), *Product Design and Development*, McGraw Hill

7. Henderson, R.,(1999), MIT Class Tape, *Technology Strategy Class*, Class #2, #3, #6, and #8

8. Sanderson and Uzumeri (1995), "Managing product families: The case of the Sony Walkman", *Research Policy 24* (1995) 761-782

9. Simpson, Seepersad, and Mistree (2000), "Balancing Commonality and Performance within the Concurrent Design of Multiple Products in a Family"

10. Sabbagh K (1996) "Twenty-first century jet: the making and marketing of the Boeing 777", Scribner, NY

11. Strope, D., (1996), X-Ray Timing Explorer (XTE), A Standard of Excellence, Internal NASA Report

12. Ruffa, Castell, Flatley, and Lin (1998), "MIDEX Advance Modular and Distributed Spacecraft Avionics Architecture", *IEEE Aerospace Conference Proceedings*

13. Watzin, J. (1998), SMEX-Lite – An Innovative System Architecture for Reducing Spacecraft Size and Cost", *49th International Astronautical Congress*

14. Fraeman, M. (1997), "A Fault Tolerant Integrated Electronics Module for Small Satellites", *11th AIAA/USU Conference on Small Satellites*

15. Schulz, A., Fricke, E., Igenbergs, E., (7/2000), "Enabling Changes in Systems throughout the Entire Life-Cycle – Key to Success?", *Proceeding of 10th Annual Symposium of INCOSE*, Minneapolis

16. Suh N., (1990), *The Principles of Design*, Oxford University Press.

17. Lyke, J., (1998), *Open Systems and Their Applicability to the Advanced Sensor and Discriminating Interceptor Technology Programs (ASTP/DITP)*, White Paper, Air Force Research Laboratory, Albuq., NM

18. Caffrey, R. (2001), *Implementing Spacecraft Avionics Platforms based on an Open Architecture*, MIT Masters Thesis

19. Roberson and Ulrich, K.T. (September 1998), *Planning Product Platforms, Sloan Management Review*, Vol. 39(4)

20. Gonzalez-Zugasti, J., Otto, K., Baker, J. (1998), *A Method for Architecturing Product Platforms with an Application to Interplanetary Mission Design*, Proceedings of 1998 DETC: 1998 ASME Design Automation Conference