Design of a Pico-Satellite for the Monitoring of the Performance of a Thin Film Solar Array

William J. Hegarty, *Stanford University*
Jerry T. Teshirogi, *Stanford University*
Ian K. Prager, *Stanford University*
Robert Twiggs, *Stanford University*
D. Keoki Jackson, Sc. D., *Lockheed Martin Space Systems Co.*

***Abstract*—This paper presents an overview of the design and mission of a pico-satellite designed to monitor the performance of a Thin Film Solar Array (TFSA) over a one-week period. TFSA is a solar array technology that allows solar cells to be deposited onto a thin, flexible substrate. This substrate can be easily folded, which allows large solar arrays to collapse into a small space. The Aerospace Corporation has developed a small deployable solar array based on this technology. During this mission, the pico-satellite will deploy the TFSA. Once deployed, the voltage and current generated by the array will be monitored. The majority of the pico-satellite's subsystems are constructed from off-the-shelf components that have been modified for space flight. These are a Kenwood amateur radio communications system, a Basic-X micro-controller based computer system, and a power system. These components, along with the ability to be launched as a secondary payload help reduce costs. This mission is ideally suited for a pico-size satellite due to its short duration, low power requirements, and lack of pointing requirements. It is hoped that information gathered on this mission will allow larger TFSA's to be built in the future, enabling them to act as primary power sources for future satellites.**

***Index Terms*—Pico Satellite PicoSat Cubesat Thin Film Solar Array TFSA off-the-shelf Kenwood BasicX.**

I. Introduction

This mission is to test the Thin Film Solar Array (TFSA) technology. TFSA's are solar arrays that are fabricated by depositing material onto a thin film. As of this writing, the TFSA technology exhibits poor efficiency when generating power; a very large array would be required to power a satellite. It would be uneconomical to build a dedicated satellite to test a large deployable TFSA.

Pico-satellites are typically considered to be small satellites, weighing approximately 1 kilogram. The small size and weight allow these satellites to be fabricated and launched cheaply, yet advances in microelectronics allow the pico-satellites to have sophisticated on-board computers, data gathering sensors, and capable radio communications systems.

Even for this pico-satellite, the thin film array is a small experimental payload rather than a source of electricity. The TFSA is deployed from one side of the vehicle, while the other sides of the vehicle are covered with standard solar cells that provide power to the satellite bus. The payload solar array's electrical power is discharged through a resistor, while the on-board computer monitors the voltage across that resistor generated by the solar array. This data is recorded for transmission to the ground through an amateur radio. The Aerospace Corporation has required the pico-satellite to collect data on the solar array performance for at least one week. This lifespan is appropriate for the pico-satellite, since the mission's goal of having a low cost vehicle requires the use of consumer grade components for most parts of the satellite and no attitude control or orbit maintaining features.

Most of this pico-satellite's physical requirements have been dictated by the desire to reduce costs of pico-satellite launches through the use of a common launch canister. The CubeSat concept developed by the Stanford Space Systems Development Laboratory and California Polytechnic State University served as an initial baseline for this mission. This group has been developing a launch canister for cube shaped satellites with external dimensions of 10cm x 10 cm x 10cm. This mission will use a similar canister currently being developed by The Aerospace Corporation to carry pico-satellites aboard the Space Shuttle. It is a rectangular aluminum box designed to bolt to the interior of the Shuttle's cargo bay. Its internal capacity is a rectangular 4 in x 4 in x 10 in volume. Since this space is to be split between two pico-satellites, this satellite has exterior dimensions of 4 in x 4 in x 5 in with the deployable solar array in its stowed position. Upon command from the shuttle, the launch canister opens and deploys the pico-satellites with a spring.

While this mission does not have a launch manifest at this time it is likely that this pico-satellite will be launched during one of the International Space Station servicing missions planned over the next several years. A Space Station orbit of 390 km altitude at 51.6 degrees inclination was assumed for the

analysis presented here.

II. EXPERIMENT DESIGN

1) *Payload*

The Thin Film Solar Array is made of film that is 0.06 inch thick and flexure hinges that connect the thin film quadrilateral segments. Unlike crystalline solar cells, which are always rectangular and of a fixed dimension; these cells can be made into any two dimensional shape. They are flexible because they are constructed around a thin polyimide core. A 12 in^2

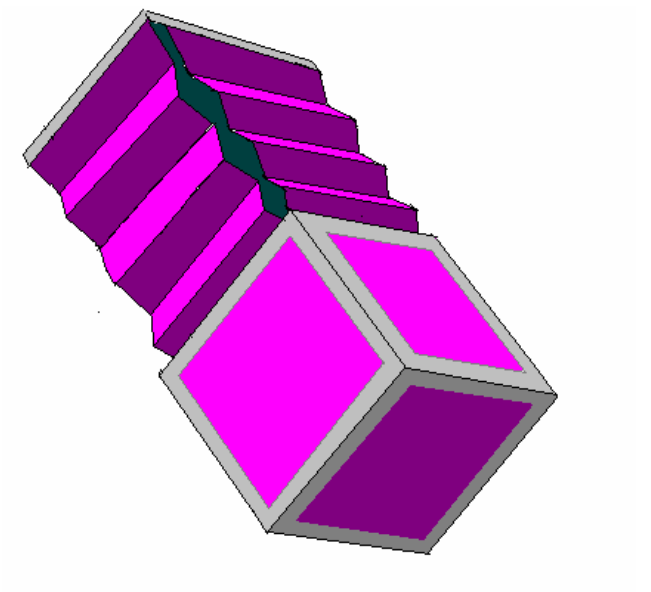

Figure 1 Deployed Thin Film Solar Array

TFSA solar cell can typically generate 400 milliwatts[i].

Figure 1 shows how the TFSA is packaged like the bellows of an accordion. In the stowed configuration, the solar array is folded at the hinges in to a "Z" shape, and attached to one square face of the spacecraft structure. In a deployed configuration, the hinged segments are fully extended to present a large surface area.

I I. Mission Timeline

The mission for this satellite begins when it is loaded into the launch canister. That is the last opportunity for access to the satellite. The batteries will be brought up to full charge, the computer will be set with the latest flight software and the flags in the EEPROM will be set to their initial configuration. The vehicle is then dormant until it is released from the launch canister.

Upon release from the launch canister, a spring-loaded button on the end of the vehicle will be released. This button completes the power circuit to turn on the satellite. The flags set in the flight computer's internal memory will indicate that it is in *Pre-Deploy mode*. The vehicle performs checks on its battery charge state, and then proceeds to *Deployment mode* if the battery has retained enough charge. If the batteries discharge completely between the time the satellite was loaded into the launch canister and ejection, the EPS system is capable of recharging the batteries without the use of active components. In such a case, the vehicle would be inactive until the solar arrays collect enough energy to build up a charge in the batteries.

In *Deployment mode*, the vehicle sends current through fuse wires that release the payload solar array and the antenna elements. Immediately after this, the vehicle can begin its main mission.

The primary mission of the satellite is to collect voltage and current data from the deployed solar array and communicate the data back to Earth. The data is collected by sampling the A-D converters on board in *Data Collection mode*. This takes place at intervals specified by The Aerospace Corporation as depicted in Table 1.

	Following Deployment l	Mid-mission	All times not otherwise noted	End of mission
SampRate	1 Hz	1 Hz	1/60 Hz	1 Hz
Time in state	0:30	0:30	(remainder of 7 days)	0:30

Table 1 Data Sampling Rates

Data Recovery mode is used to transmit the data back to earth. Since the radio consumes too much power to permit continuous operation, it is shut off for periods of time. The radio is used to send a beacon signal to alert the ground that it has been turned on and is ready to listen to commands. The satellite will listen for a response from the ground for a number of seconds following the beacon. If a command is received (usually a command to transmit the collected data would be sent from the ground), the radio will act on that command and listen for any other commands. If no commands are received for a period of time, the satellite will shut the radio down to save power. The mission will continue this way for one week. Given the storage capability of the Basic X, the ground station will need to contact the satellite approximately once a day over that week to ensure that no data is lost due to overflow of the

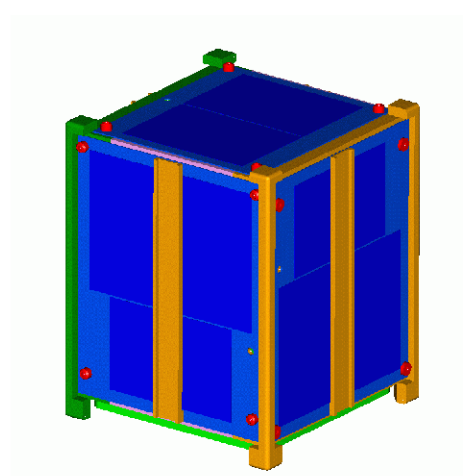

satellite's memory.

III. Overall System Architecture

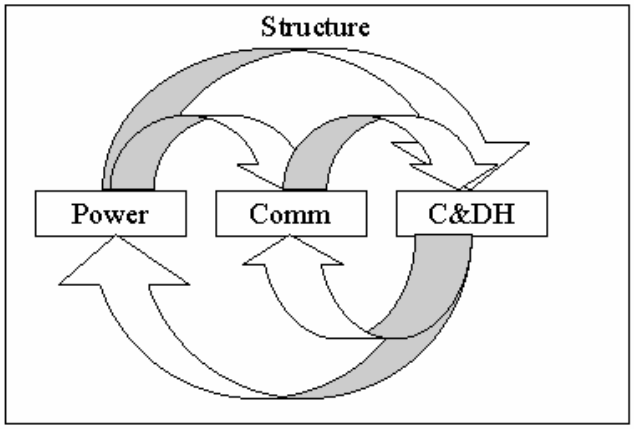

Figure 3. Architecture diagram

The overall architecture of the pico-satellite was kept as simple as possible to provide a robust system that can adequately satisfy its mission requirements. The bus architecture has 4 basic subsystems: Power, Communications, Command and Data Handling (C&DH) and Structure.

III. Subsystems

1) Power

Body mounted solar arrays were chosen for their low cost and simplicity, however, their small size places a limit on the amount of electrical power available to the vehicle. The total surface area of the spacecraft, combined with the state of technology of solar cells, determine the maximum power level and capacity the spacecraft is able to generate and store. This in turn determines whether the proposed mission is achievable. Power generation also severely constrains the design and component selection of all spacecraft subsystems requiring power. Through iterations in the power budget and considering all mission scenarios, an optimal power management cycle must be designed that results in a positive power margin for each orbital cycle.

The physical dimension constraint of the pico-satellite also limits battery sizing. The small size of the spacecraft combined with the power requirements of the onboard subsystems demand a smaller, lighter, higher energy density power storage system.

Despite these challenging requirements, the current state of technology makes possible an EPS design capable of supporting a reasonable pico-satellite mission such as the TFSA.

The electronics industry in recent years has focused on developing products with higher efficiency, lower cost, smaller size, and lower power requirements. This makes available a wide selection of components for small spacecraft development, and may in turn make possible many short

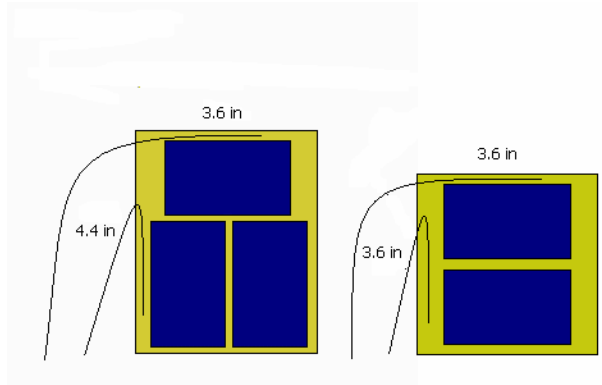

Figure 4. Solar Array Layout

duration missions using these smaller and less expensive electronic parts.

The total surface area of our spacecraft is limited, so the most efficient solar cell available is selected to maximize power generation. Since the budget for materials for the total program life cycle is only $5000, cost is a major constraint For the spacecraft, 22% efficient dual-junction GaAs solar cells measuring 1.5 in x 2.5 in from a stockpile of rejected cells were selected. Although these cells do not meet the stringent specification requirements for typical production spacecraft, they are quite usable; they have been field-tested, and their performance is documented. For our proposed one-week mission, these cells will meet our requirements.

For mission success, the power source will need to last the duration of the mission. Of all the rechargeable battery chemistries available today, lithium-ion battery cells are the best selection. This selection was made by trading cost, schedule, risk, and performance. Nickel cadmium cells (NiCd) are low in cost, easy to obtain, and space-proven. However, their power-to-volume ratio makes them too bulky for our spacecraft's limited volume. Nickel metal hydride (NiMH) cells offer higher energy density than NiCd cells, but at a higher price. Lithium-ion batteries offer the best energy density among readily available rechargeable batteries, but at a slightly higher cost than the NiMH cells. Due to the extremely tight volume allocation, the performance of lithium ion cells justifies their expense. Although the Li-ion cell is relatively new to the spacecraft field, they have flown successfully. The operational temperature ranges of all three chemistries are very similar, within the range from 0°C to about 40°C. The 3.7VDC 1400mAH prismatic cell pre-packaged with over-voltage, under-voltage, and over-current protection safety circuitry was chosen.

	Function	Voltage (V)	Current (A)
Kenwood TH-D7A Transmit Mode	Communication	5	0.6
Basic X-24	Command & Data Handling	5	0.04
AWG40 NiCrA fuse wire	Payload Deployment	5	1.5

Table 2. Power Usage

The Aerospace Corporation requires that the payload to be deployed by burning a fuse wire. The fuse wire burns with 1.5A of current at 5VDC for 130 milliseconds. This power requirement is the maximum load the EPS must support during the mission. The battery voltage must be raised to a level that is capable of burning the fuse wire.

A widely available switch-mode step-up voltage regulator kit from Maxim was selected for achieving 5VDC. The voltage regulator kit is a DC-DC conversion circuit that integrates easily with the power system. The kit can deliver up to 20W at a fixed 5VDC output using an on-chip power MOSFET. Even in the case of a voltage drop as low as 0.8V, the step-up voltage regulator will still output 5V. Moreover, the integrated circuit uses only 1 milliwatt of power and is up to 87% efficient.

For down-converting voltage, a voltage regulation diode was selected. The voltage regulation diode is a one-part circuit.

Much effort was expended in planning and maintaining a single regulated voltage level for the entire spacecraft. Trade studies were conducted to choose subsystem components that operate at 5VDC and draw the least amount of current. Proceeding sections of the paper discuss the selection process for each of these subsystems.

The pico-satellite is a rectangular box made up of four 4 in x 5 in faces and two 4 in x 4 in square faces. Ideally, the solar cells would cover as much of the exterior as possible. The customer requires one of the square faces for mounting the payload, leaving the remaining five faces free for mounting solar cells. For the rectangular faces, three solar cells are connected in series to achieve 7VDC. For the square face, two are connected in series to achieve 4.7VDC. Since the solar panels connect to the regulated power bus, each string requires a voltage regulator to output power at the regulated bus voltage. A battery maintenance chip by Maxim will be utilized for controlling charge level and estimating capacity. It provides a digital temperature sensor, an analog-to-digital converter that measures battery voltage and current, an integrated current accumulator that keeps a running total of all current entering and leaving the battery, an elapsed timer, a nonvolatile memory for storage of important parameters, and an integrated charge controller for lithium ion batteries. Information is sent to and from a micro-controller serially over one data line.

2) Communications

The communications system for this satellite is based on widely available amateur radio equipment. There is a broad selection of high quality amateur radio equipment, and the amateur radio licensing system allows access to a wide range of frequencies and broadcast powers without the worry of causing interference in different countries. Furthermore, amateur radio manufacturers already produce digital data communication hardware based on the AX.25 protocol. These Terminal Node Controllers (TNC's) allow a radio to plug into any computer that supports the RS-232 protocol and communicate ASCII text. The TNC handles all the hardware aspects of data communication, such as modulating and demodulating of the digital signals and audible tones for broadcast as well as the software aspects such as forming data packets.

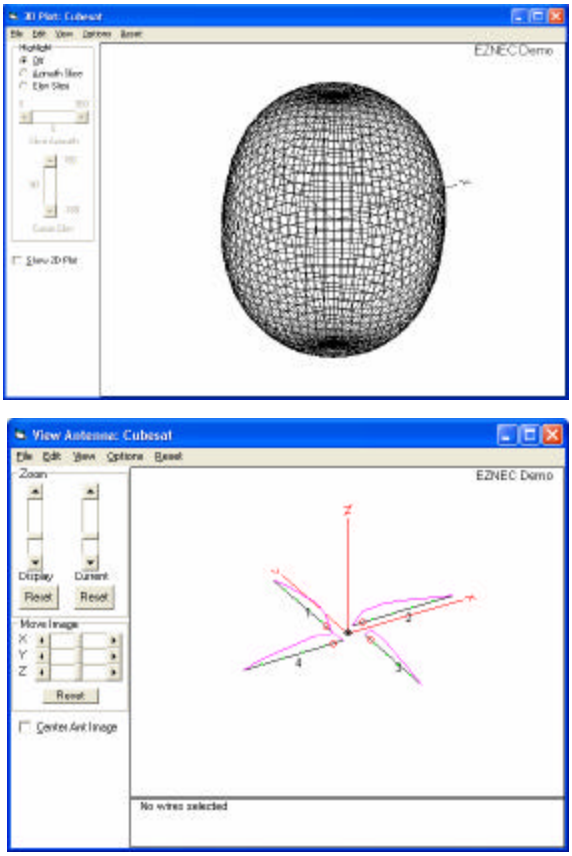

Figure 5. Antenna Analysis with EZNEC

There are several requirements that the communications system had to satisfy for this mission. It has to be powerful enough to send a strong signal to earth from space. The radio has to be capable of transmitting enough data during its contact time with the ground, and it has to be small enough to fit inside the satellite. The system has to be very power efficient, since the satellite has fairly small solar arrays.

A Kenwood TH-D7A handheld radio was selected as the flight radio. This radio has an AX.25 TNC built in, making the connection to the on-board computer very simple. The Kenwood is also very easy to integrate with the on-board power system. The built in TNC uses less power than a similarly capable radio and stand-alone TNC combination, and the system is capable of operating with a wide range of voltages (from 4.5 V to 15 V).

The Kenwood has features that make it even more suitable for a pico-satellite. The RF circuitry in the Kenwood is securely fastened to a metal back plate that assists in

dissipating heat through conduction. The circuit board traces are also very heavy, allowing heat to travel through the board easily.

Furthermore, the radio portion of the Kenwood can be controlled with ASCII commands through the same RS-232 port as the TNC. Features such as output signal strength and tuned frequency can be modified during the mission if required. This feature is valuable, since the frequency settings of a synthesized radio like the Kenwood may theoretically be upset due to radiation. If such an event occurred, the on board computer could reconfigure the radio as necessary.

The hardware of the Kenwood was modified for space flight by following the same procedure used by the 3-Corner Sat team.[ii] Modifications included removing the circuitry from the housing and replacing the consumer-grade plastic knobs and jacks with hard-wired jumpers and cables.

The Kenwood can be set to broadcast at several power settings. A 500mW signal was selected for this mission based on the link budget shown in Table 3[iii]:

Orbital Altitude:	390000	m		
Horizon LOS:	2264303.999	m		
Frequency	1.44E+08	Hz		
Broadcast Power (P)	-3.010299957	dB	(.50 W)	
Line Loss (Ll)	-1	dB	Handbook value	
SC Antenna Gain (Gt)	-10	dB	Estimate	
Space Loss (Ls)	-1.43E+02	dB	147.55-20 log S - 20 log f	
Atmospheric Loss (La)	-0.3	dB	Handbook Value	
Ground Ant. Gain (Gr)	10	dB	Generic high quality HAM	
Noise Temp (Ts)	25	dB-K	Handbook value	
Boltzman's Const (k)	-228.6	dB	Physical const	
Bit Rate (R)	30.79181246	dB		
Total Eb/No:	25.78194307	dB	(P Ll Gt Ls La Gr)/ (K Ts R)	

Table 3 Link Budget

The antenna on the satellite is the most demanding component of the communications system. Since there is no attitude control system onboard the satellite, the ideal antenna is an isotropic radiator. This is nearly impossible to realize, but a turnstile antenna is the closest approximation. A turnstile is typically made by taking two dipole antenna elements that are 90 degrees out of phase and arranging them in a cross shape. The phasing between the two elements leads to circular polarization when the antenna is viewed normal to the cross's plane. When viewed within the plane, the polarization is linear. The antenna must have no large null areas because the satellite attitude relative to the ground station is uncontrolled. A simple analysis using EZNEC™ shows that this antenna setup has no null points in its radiation pattern. The radiation from the antenna is fairly uniform regardless of vehicle orientation.

The pico-satellite's chassis has a significant influence on the antenna design. Using two dipoles is problematic, as the

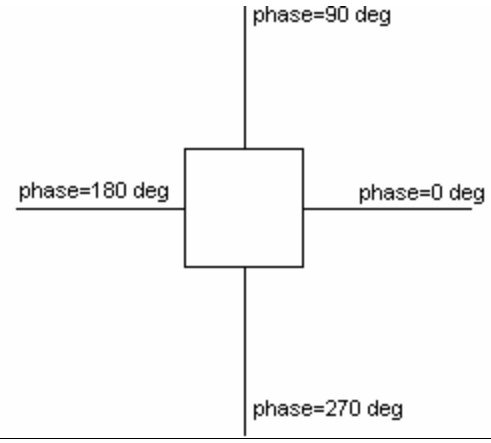

Figure 6. Antenna Element Phasing

ground halves of each of the dipoles would pass through the bus of the vehicle and be electrically connected to each other. The solution is to use 4 monopole antenna elements in a cross configuration to achieve a similar effect. Each element is driven at a frequency that lags the element preceding it by a phase difference of 90 degrees. The chassis of the vehicle remains as a ground to the antenna system.

A coaxial cable harness is used to split the radio signal to each of the driven elements. The major concern with this harness was matching the proper phase and impedance for each of the antenna elements and the radio. Phase is relatively easy to change in a coaxial cable. If a cable length is trimmed to a certain fraction of one wavelength of the signal it is carrying, the signal will be phase shifted by that fraction of 360 degrees at the end of the cable. The theoretical basis for impedance matching of the distribution harness lies in a characteristic of coaxial lines that are ¼ of a wavelength long. Such lines follow the equation[iv]:

$$Z_o = \sqrt{Z_i Z_L}$$

Eq 1. Coaxial Impedance

That is, the characteristic impedance of the line, Z_o is equal to the square root of the input impedance, Z_i, multiplied by the load impedance Z_L. In this sense, the piece of cable can act as a transformer to match two different impedances.

Whenever the cable is split into two lines, there is a potential for an impedance mismatch. In this case, where multiple loads (antennas) are driven from one source (the radio) the loads present themselves in parallel. Two 50 ohm antennas in parallel present a 25 ohm load to the source. When 4 antennas are driven from one source, the quarter wave coaxial transformer can be used to match the system. The

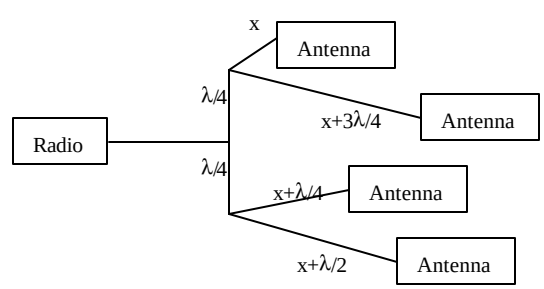

network is shown in figure 7.

Each antenna is 50 ohms, so each pair of antennas presents a 25 ohm impedance to one end of the coaxial line. The other end of the coaxial line must present a 100 ohm impedance, since the two quarter wave lines need to combine in parallel to form a 50 ohm impedance to match the radio. The necessary match is demonstrated in the following equation:

$$50\Omega = \sqrt{100\Omega * 25\Omega}$$

The two most readily available frequency bands are VHF and UHF. VHF was chosen for its superior signal strength and its lower susceptibility to Doppler effects. The drawback of VHF is that the longer wavelength requires longer antenna distribution harnesses. At 144 MHz, the wavelength is slightly over 2 meters in a vacuum. The coaxial line used here has a velocity factor of 70.3%. This makes the wavelength in the coaxial cable 1.4 meters long. In total, nearly 3.5 meters of cable must be used to distribute the signal properly to each element. Small, .090 in diameter flexible coaxial cable from Astrolab is used here to fit in the vehicle.

3) Command And Data Handling

The Command and Data Handling (C&DH) system provides electronic control of the pico-satellite. Over the course of the mission, the C&DH system collects data from the payload, processes it prior to transmission to the ground, and oversees the general operation of the vehicle bus. All of these functions are handled on this mission by the Netmedia Basic X BX-24™ micro-controller.

The C&DH subsystem must fulfill several requirements to accomplish this mission. It must be capable of monitoring the voltage across four load resistors to gauge the performance of the payload solar array, and storing that data into non-volatile memory at the rate and in the quantity required by The Aerospace Corporation as given in Table 1. Radiation hardened circuitry was deemed too costly for this mission, so the processor must have features such as a watchdog timer and non-volatile program storage to allow the C&DH subsystem to detect and correct radiation-induced upsets. It must be small and lightweight, and it must not consume much power.

Based on other component selections for this mission, the ability to operate at 5VDC and the ability to communicate serially with the RS-232 protocol were sought as features for the C&DH system.

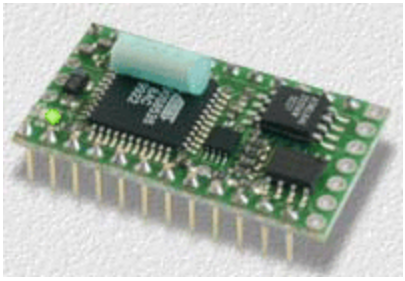

Figure 8. Basic X Microcontroller

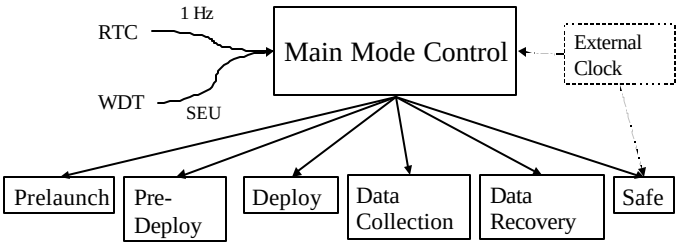

Figure 9 Software Flow Diagram

The Basic X is equipped with many features that help it to accomplish the mission. It has eight 10-bit analog –to- digital (A-D) converters that are used to monitor the voltages generated by the payload solar panels. It has a 32 kilobyte EEPROM for non-volatile program and data storage, and is capable of fulfilling the voltage and communication requirements outlined above. Other capabilities useful for this mission are the Basic X's real time clock and watchdog timer. The inclusion of these features with the Basic X chip simplifies software development as well as fabrication of the C&DH system, since the Basic X development environment includes functions for interfacing with the Basic X features without the need for low-level coding.

The Basic X uses software written in the BASIC language. In the flight program, different modes of the vehicle are coded as subroutines called out by the main loop of the flight software. The main loop of the program is responsible for determining the vehicle operational mode. It does this by monitoring its internal clock and by setting and reading flags in the EEPROM.

Prelaunch mode is designed only for functional component testing. This subroutine is only concerned with testing the radio, battery, and sensor functions.

Pre-deployment mode represents the state of the spacecraft during the Shuttle separation and orbital injection. When The Aerospace Corporation launcher releases the pico-satellite from the payload bay, power is applied to the Basic X. After turning on, the Basic X checks its EEPROM to find its last recorded mission mode. In this case, when the Basic X turns on for the first time during the mission, no flags in memory are set and the computer will automatically start the Pre-deployment subroutine.

Every time the Basic X is turned on, including initial deployment or anomalous conditions such as a reset commanded by the watchdog timer, it first queries the battery monitor to identify battery power depth of discharge (DOD). If the battery power levels are dangerously low, the spacecraft switches to *Safe mode* where it shuts down the Basic X, the radio, and the TNC to conserve power while the lithium-ion batteries charge from the solar cells. The battery monitor, charge regulator, and a low-power external clock chip remain

powered to re-activate the Basic X after a given time interval. Upon restart, given acceptable battery levels, the flight code checks its EEPROM to identify the last recorded spacecraft mode. Note that the safe mode flag is not written to the nonvolatile memory.

After activation, the pico-satellite enters into *Deployment mode*, which controls the payload and antenna deployments on the spacecraft. After *Deployment mode*, the pico-satellite moves into its main mission control loops: *Data Collection* and *Data Recovery modes*.

Data Collection mode steps through the process of using the A-D converters to sample the voltage generated across the load resistors by the payload solar array, and stores those values into EEPROM. *Data Collection mode* also commands the vehicle radio to broadcast a beacon and listen for commands from the ground. Once the receiver observes an uplink signal from the ground station, the main control loop initiates the *Data Recovery mode*. This *Data Recovery mode* retrieves data packets from the memory and sends them to the TNC, which encodes the data for transmission. Analysis identifies slightly over 120 kilobytes (KB) of data needs to be received for mission success. However, since the EEPROM capacity is 32 KB for both program and data storage, only 15 KB of data may be stored at any one time on the vehicle. The current storage capability requires the vehicle to transmit at least nine times during the mission to avoid data loss due to overflow. At 1200 bits per second, 15 KB of data could theoretically be transmitted in 102 seconds. The typical ground contact time of approximately seven minutes supports the necessary transmission duration, even in the presence of significant communications overhead.

The C&DH system is capable of dealing with faults it may encounter during its mission. The Basic X watchdog timer can reset the chip if the software is upset. The flags and data periodically stored into EEPROM facilitate recovery from crashes. When the Basic X is restarted after an upset, it can read the state flags and data in its EEPROM to restart at the last state prior to interruption of the software execution.

III. CONCLUSION

Advances in microelectronics have made it possible to design noteworthy space missions at a low cost, using small, efficient, reliable and inexpensive components that are widely available. The small size of the satellite allows the use of secondary payload space on a launch vehicle, which further reduces the mission cost.

By taking advantage of low cost components, this project is likely to be completed for less than $5000 in materials. Although using non-space-qualified components introduces a measure of risk, the short duration of this mission and past successful use of consumer-grade hardware[v] in space vehicles, coupled with a thorough pre-flight testing regimen will permit this mission to succeed.

This mission will garner valuable experimental data on The Aerospace Corporation TFSA. Furthermore, the spacecraft design developed for this pico-satellite application will be useful for others hoping to produce small, inexpensive satellites.

---

[i] Hinkley, David; Simburger, Edward J. *A Multifunctional Flexure Hinge For Deploying Omnidirectional Solar Arrays* AIAA-2001-1260

[ii] Horan, Stephen. Available on website at http://telemetry.nmsu.edu/~shoran/nanosat/documents.htm.

[iii] P.567. Wertz, James R. and Larson, Wiley J. (Eds.) *Space Mission Analysis and Design, 3rd ed.*, El Segundo, CA. Microcosm Press ©1999

[iv] P.26-4. Straw, Dean R. (Ed) *The ARRL Antenna Handbook, 19th ed.* . Newington, CT. ARRL ©2000

[v] Stanford Space Systems Development Laboratory has successfully used consumer products on their Opal and Sapphire missions. See http://ssdl.stanford.edu

Acknowledgments This work was performed in the Stanford Space Systems Development Laboratory with partial support from Lockheed Martin Space Systems Company and The Aerospace Corporation.