Canada's Smallest Satellite: The Canadian Advanced Nanospace eXperiment (CanX-1)

G. James Wells Luke Stras Tiger Jeans

Advisors: Dr. Robert E. Zee, Manager, Space Flight Laboratory
Freddy M. Pranajaya, CanX Program Manager
Daniel G. Foisy, SFL Computer Engineer

Space Flight Laboratory
University of Toronto Institute For Aerospace Studies
4925 Dufferin Street, Toronto, Ontario, Canada, M3H 5T6

Abstract

The Canadian Advanced Nanospace eXperiment (CanX) Program of the Space Flight Laboratory at the University of Toronto Institute for Aerospace Studies (UTIAS/SFL) is a Canadian first, allowing engineering researchers to test nano- and micro-scale devices rapidly and inexpensively in space. CanX is a "picosatellite" program for research and education, with graduate students leading the design, development, testing, and operations of Canada's smallest satellites having a mass under 1 kg. The first UTIAS/SFL picosatellite, CanX-1, is scheduled for launch in early 2003 together with CubeSats from other university and industry developers. The objective of the CanX-1 mission is to verify the functionality of several novel electronic technologies in orbital space. This paper outlines the features, capabilities and performance of CanX-1, including horizon and star-tracking experiments using two CMOS imagers, active three-axis magnetic stabilization, GPS-based position determination, and an ARM7 central processor.

1. Introduction

CanX is the first Canadian picosatellite program. The CanX program of the Space Flight Laboratory (SFL) at the University of Toronto Institute for Aerospace Studies (UTIAS) is based on the CubeSat program started by Stanford University and California Polytechnic State University (CalPoly) [2]. The primary goal of the CubeSat program is to provide students the opportunity to develop complete satellite systems and perform space-based experiments using relatively small and inexpensive satellites. The CubeSat picosatellite is 10x10x10 cm in size and 1 kg in mass. The first spacecraft of the CanX program, the CanX-1, is based on this design.

The objective of CanX-1 is to verify the functionality of several technologies in orbital space. Color and monochrome CMOS imagers will be tested for imaging star fields, the moon, and the Earth. The images will be used to verify the ability to perform star/moon/horizon tracking as part of a complete attitude determination system. CanX-1 will also verify the functionality of a custom-built housekeeping on-board computer (OBC). A CMC Electronics Global Positioning System (GPS) receiver and an active magnetic control system will also be tested. In addition, the spacecraft will also collect telemetry from several key components, such as the Emcore gallium-arsenide solar cells, and a Honeywell three-axis magnetometer.

CanX-1 is scheduled for launch in the first half of 2003. It will be launched as a secondary payload with a set of other CubeSats built by other groups.

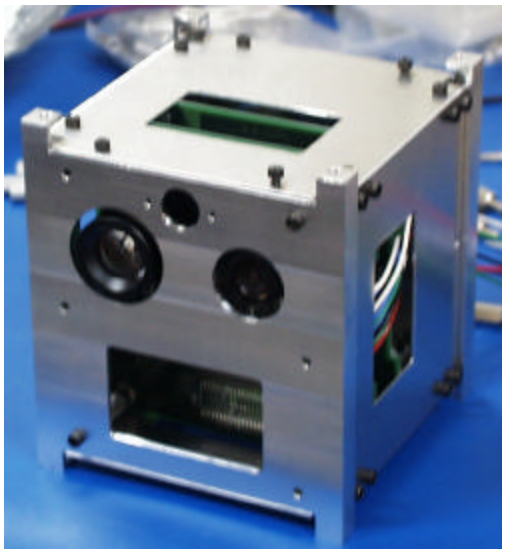

Figure 1: CanX-1 Picosatellite (during construction)

2. Mission Specifications

2.1 Payloads and Experimental Subsystems

The CanX-1 mission is intended to demonstrate a highly capable spacecraft, and it incorporates a number of payloads and experimental subsystems. They are:

1) CMOS Imager
2) ARM7-based On-Board Computer (OBC)
3) GPS Receiver
4) Active Magnetic Attitude Control System (ACS)

2.1.1 CMOS Imager

The imager payload consists of two Aglient CMOS imagers. The color imager in conjunction with a wide-angle lens (112°) will be used primarily to take pictures of Earth. The monochrome imager in conjunction with a narrow-angle lens (14°) will be used to test the feasibility of taking star/moon/horizon pictures that can be used for attitude determination and control.

2.1.2 ARM7-based On-Board Computer (OBC)

CanX-1 will fly a custom designed housekeeping computer based on the low-power ARM7 core, operating at up to 40 MHz. There are many C compilers available to program the microprocessor. This OBC offers great speed and flexibility in use. The functionality of this OBC will be monitored throughout the entire lifetime of CanX-1.

2.1.3 GPS Receiver

A commercial-off-the-shelf (COTS) GPS receiver will also fly on CanX-1. Connected to two antennas for omni-directional coverage, CanX-1 will test the functionality of this GPS receiver in orbital space. If successful, the GPS receiver can be used to help determine the orbital position of CanX-1. In future CanX missions, the GPS receiver can be used for position determination as part of a formation flying system configuration.

2.1.4 Active Magnetic Attitude Control System (ACS)

CanX-1 will have a COTS magnetometer along with three custom-built magnetorquer coil systems as part of an active magnetic ACS. The magnetic ACS is used to detumble CanX-1 to assure that any images taken will not be blurred due to the rotation of the picosatellite. In addition, CanX-1 will attempt to perform active coarse pointing.

2.2 Orbit

The CanX-1 orbital analysis is based on a 650 km, sun-synchronous baseline orbit, however its exact orbit is yet to be finalized by the launch provider. As such, the CanX-1 design takes into account the worst-case scenarios for power generation and cold thermal conditions (noon-midnight line of nodes) as well as hot thermal conditions (dawn-dusk line of nodes) expected at the baseline orbit.

Using the Satellite Tool Kit to simulate this orbit for a one-month duration, single contact and daily contact duration information is determined (see Table 1) for an acquisition-of-signal/loss-of-signal angle of 10 deg. On average, there are four contact periods a day with a total daily contact time of between 28 and 29 minutes.

There is enough margin in both the contact link budget and the data budget to compensate for any changes in the selected orbit altitude or inclination, which will alter the expected contact time and up/downlink signal-to-noise ratio with CanX-1. Since the power system and thermal designs already take into account the possibility of very different eclipses, it is not required that CanX-1 be placed into a particular sun-synchronous orbit.

Table 1: CanX-1 Contact Time Data (STK Simulations)

Minimum Elevation Angle	10	deg.
Sun Synch, alt.=650 km, 6 pm-6 am Orbit, Oct. 1 to Oct. 30		
Min Single Contact Duration	87	s
Max Single Contact Duration	544	s
Mean Single Contact Duration	427	s
Total Simulation Contact Duration	51,646	s

No. Days in Simulation	30	
Daily Contact	1,722	s
	29	Min

2.3 Operations

The operation modes of CanX-1 are:

- Safe-Hold/Sleep
- Magnetic Attitude Control Detumbling/Torquing
- Payload Active

In every mode, the housekeeping OBC is always collecting telemetry from the temperature, voltage, and current sensors present on every solar panel and on every interior circuit board.

Table 2 presents a matrix showing when one operation mode can switch into another, and what event can initiate that switch. The following is a description of each mode.

Table 2: Operation Mode Switching Matrix

	TO		
FROM	**Safe-Hold**	**Detumbling**	**Payload**
Safe-Hold	N/A	GC	GC
Detumbling	GC, PG	N/A	GC
Payload	GC, PG, IG	GC	N/A

GC: Ground Command
PG: Power Command
IG: Instrument Command

2.3.1 Safe-Hold

The housekeeping OBC is at minimum power and the radio is in receive mode. If sufficient power is available, the radio will transmit a beacon pulse just under once every minute. All payloads, magnetorquers, and the magnetometer are switched off. Whenever CanX-1 experiences an error in one of its instruments or any other emergency situation such as a lower power situation, it will switch into this mode and stay in it until commanded by the ground to resume normal operations after any required fixes are implemented. CanX-1 will also be placed into this mode by the ground operator whenever it is not performing any mission operations or experiments for a long period of time.

2.3.2 Detumbling

CanX-1 switches into this mode whenever it is commanded by the ground to either detumble for a set amount time, or to switch on one or more magnetorquers for a set amount of time. The ground commands can be buffered so that they are implemented at specific times after the command is uploaded. This mode is used to reduce the tumbling rate of CanX-1 so that any images taken are not blurry due to its motion. This mode can also be used to introduce a torque to increase the tumbling rate of CanX-1 so that images can be taken in multiple directions without very long delays. The mode consumes the maximum amount of power when all three magnetorquers and the magnetometer are on simultaneously. All payloads are switched off in this mode, as sufficient power may not be available.

2.3.3 Payload Active

This is the nominal operation mode for CanX-1. CanX-1 switches into this mode whenever it is commanded by the ground to start collecting images using the CMOS imager payload and to record telemetry from the GPS receiver. The ground commands can be buffered so that they are implemented at specific times after the command is uploaded. For the imager, the command details how many images from each imager are required. The maximum resolution possible is 640 x 480 pixels, though images can also be collected in smaller sizes. The images are then ZIP compressed and stored in memory on the housekeeping OBC, overwriting previous images if there is not enough memory. A beacon pulse is transmitted every minute, until a command from the ground tells it to transmit all collected telemetry and images.

Figure 2 is the mission operation flowchart, providing an overview of the commands transmitted from the ground station to CanX-1 and the downlink of telemetry and payload data.

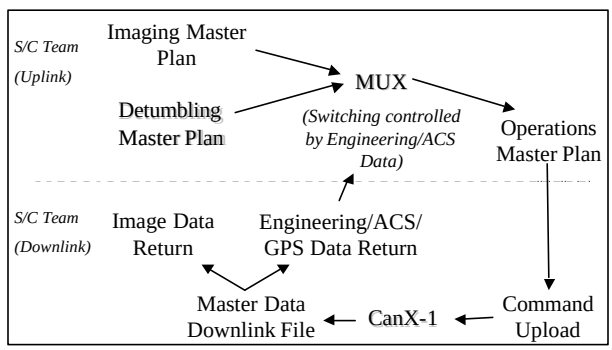

Figure 2: CanX-1 Mission Operation Flowchart

3. System Specifications

Figure 3 is a diagram of the system architecture of CanX-1. The system architecture is centralized on the housekeeping OBC, with few backup systems. This simple architecture was quick to design and takes up a minimum amount of volume and mass. All critical design points, due to the centralized nature of the system architecture, have been identified, such as the OBC and the radio. Extended ground testing will be focused on these critical components to increase the confidence in the overall system.

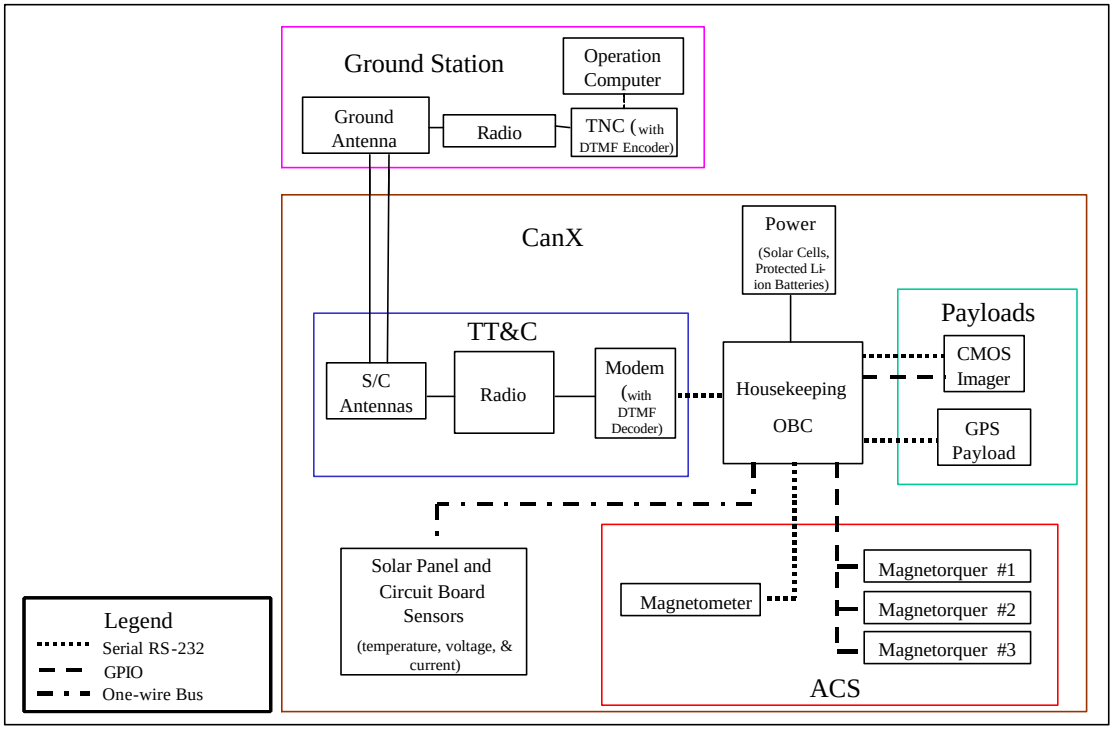

Figure 3: CanX-1 System Architecture

The design details of each CanX-1 subsystem along with the overall system status are presented below.

3.1 Structure

3.1.1 Requirements and Constraints

The goal of the structural subsystem for CanX-1 is to provide a simple sturdy structure that will survive launch loads, while providing an easily accessible data and power bus for debugging and assembly of components. Due to the size of the satellite and small expense budget, this was done with the philosophy of maximizing usable interior space, while minimizing the complexity and cost of the design. The design of CanX-1 conforms to the structural and launcher requirements set by the Stanford/CalPoly Cubesat program. The shape of CanX-1 is essentially cubic having outer dimensions of 10x10x10 cm, with 6.5 mm clearance above each face of the cube for mounting exterior components. The satellite must have four launch rails along four edges of the cube, allowing for easy ejection from the P-POD launch tube. To maintain spacing and prevent sticking with other CubeSats, standoff contacts or feet must exist at the ends of these rails. The center of mass of CanX-1 must be within 2 cm of the geometric center. The maximum mass of CanX-1 is 1 kg, and it is desired that the structure be no more than approximately 30% of the total satellite mass.

The suggested material for the main satellite structure is Aluminum 7075 or 6061. If other materials are used they must have the same thermal expansion as the aluminum. The main differences between Aluminum 7075 and 6061 are yield strength and cost; Aluminum 7075 has a greater yield strength, but is significantly more expensive. Therefore, Aluminum 6061 was chosen as the structural material for CanX-1, and a finite element analysis was done to ensure that it would not experience unacceptable stresses or displacements during launch.

The CanX-1 structure was designed using I-DEAS CAD software to ensure that all components fit together without interference, and to aid in the finite element analysis.

3.1.2 Exterior Structure

The exterior structure of CanX-1 consists of six aluminum walls connected together using stainless steel screws and Delrin bosses, and can be seen in Figure 4. Also shown in this figure is the orientation of the body axes. From this reference frame, the structural walls are named the +/-X, +/-Y, and +/-Z, accordingly. The +/-Z aluminum wall has a 2 mm thickness, while all other walls are 1 mm thick. The launch rails are incorporated in the +/-Z walls, and are oriented parallel to the Y-axis. Attached to each structural wall is a printed

circuit board (PCB) solar panel, and on the –X, -Y, and –Z faces a torquer coil is located between the aluminum structure and solar panel. Each of the aluminum walls has a 5 cm x 3 cm rectangular cutout to accommodate electronics located on the underside of each solar panel. Three circular cut outs are required on the +Z wall for the two imager lenses and the information and power test port. These cutouts were incorporated into the finite element model.

3.1.3 Interior Structure

The interior structure of CanX-1 consists of four circuit boards, which are parallel to the XY plane, as can be seen in Figures 5 and 6. The boards are numbered 1 to 4, with Board 1 being closest to the +Z aluminum panel and Board 4 being closest to the –Z aluminum panel. The CMOS imagers are located on Board 1, while power switches, the radio and battery are located on Board 2. Board 3 is the custom built OBC, while Board 4 has been reserved for payloads. The boards are spaced such that components do not interfere with each other, while the satellite mass center remains within its constrained range. The boards are held in place using four columns of aluminum spacers. These columns also act as structural supports along the Z-axis. The dimensions of the circuit boards are noted in Figure 7. The total mass of the interior and exterior structure was estimated to be 273 g, or 33% of the total satellite mass.

3.1.4 Assembly

From the structural design, the satellite will be literally built from the inside out. This means the interior electronics will be populated and assembled first using the aluminum spacers. Next the –Z aluminum wall will be attached, followed by the +/-X walls, and the +Z wall. Attaching the +/-Y walls completes the assembly. For debugging, the interior boards can be removed easily by removing either the +Z or –Z aluminum wall.

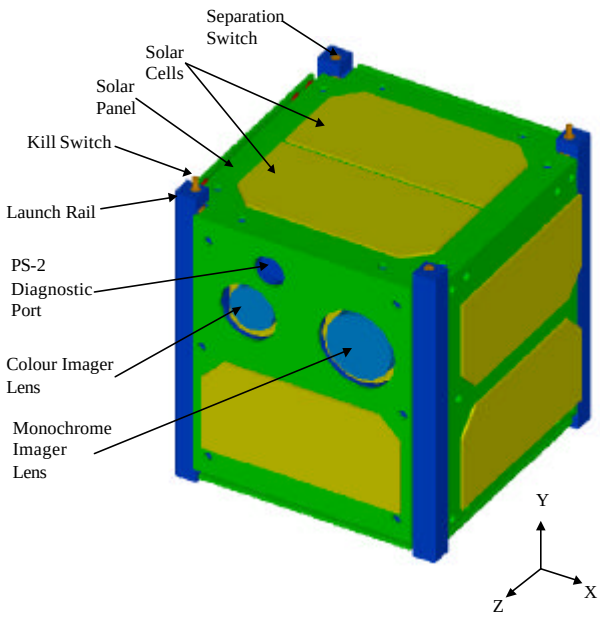

Figure 4: CanX-1 Exterior Structure

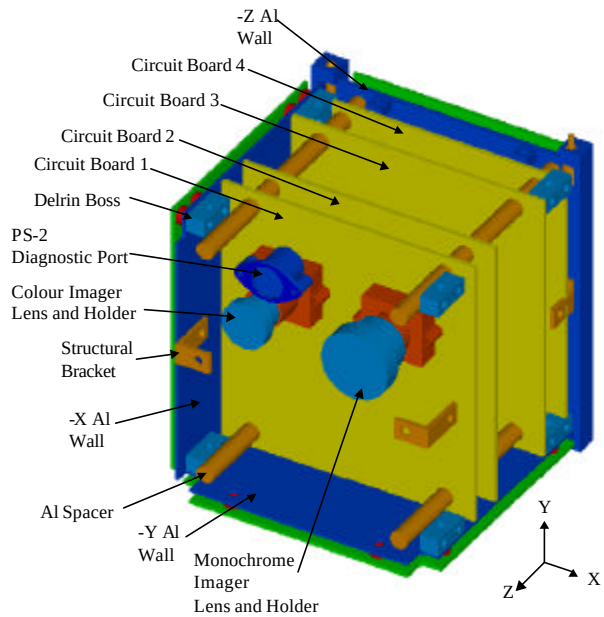

Figure 5: CanX-1 Interior Structure

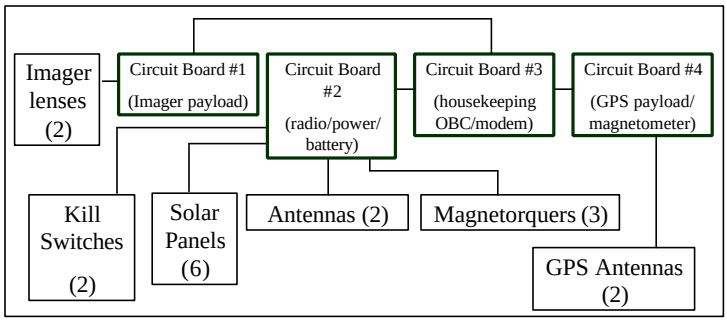

Figure 6: CanX-1 Circuit Board Arrangement

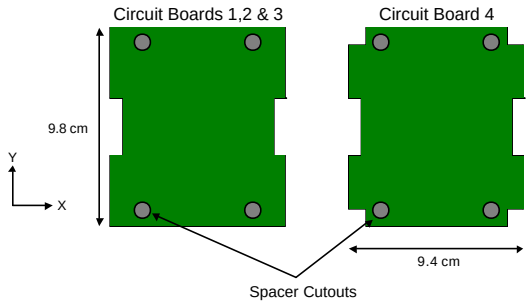

Figure 7: CanX-1 Circuit Boards

3.1.5 Finite Element Analysis

A finite element analysis has been performed to confirm the integrity of the CanX-1 structure. The walls are modeled as a thin shell mesh. Also included in the analysis are the four interior PCB boards to represent the electronics, and the aluminum spacers. The model is constrained at the eight corners of the cube to simulate CanX-1 being confined in the P-POD. Dynamic loads of 12 g's have been applied along all three orthogonal axes. An acceleration of 12 g's is 20% greater than what will be experienced during the actual launch. The walls must withstand this force along all three axes because the orientation of the P-POD inside the launch vehicle is currently unknown. Results from this analysis show that the maximum deformation is 0.0381 mm, while the maximum stress is 38 MPa, resulting in a safety margin of 30%. The first natural frequency was determined to be approximately 145 Hz, which is relatively high, therefore resonance should not be a problem.

3.2 OBC & Software

3.2.1 OBC Hardware

The CanX-1 on-board computer, as shown in Figure 8, is responsible for:

1) Control of all spacecraft subsystems
2) Communications with the ground
3) Fault detection and management
4) Telemetry generation
5) Payload control
6) Payload data management

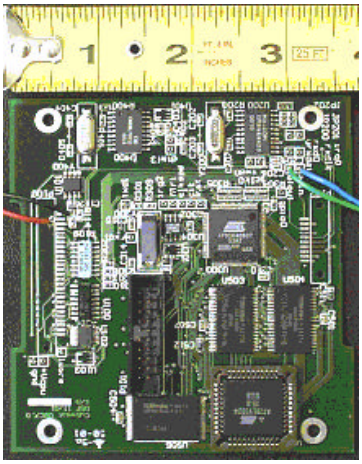

Figure 8: CanX-1 OBC

In order to accomplish these tasks, a custom single-board computer has been designed and built. The CanX-1 OBC is based on the low-power ARM7 core, operating at up to 40 MHz with 2MB of external RAM and 32MB of external FLASH. The use of a popular, off-the-shelf processor ensures that multiple development tools, such as compilers and debuggers, are available. Although the processor is not radiation-hardened or otherwise explicitly space-qualified, prior flight experience with similar processors [3] indicates that such devices can function reliably in low Earth orbit for suitable periods.

A block diagram of the OBC, including intra-board and inter-board connectivity, can be found in Figure 9.

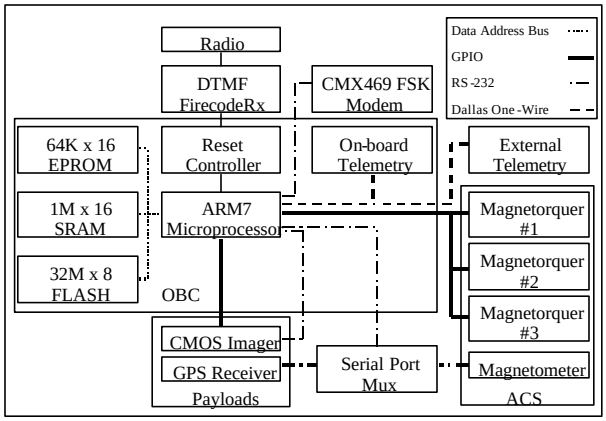

Figure 9: OBC Connectivity Diagram

The OBC uses three types of on-board memory: a small boot ROM, a large Flash-type memory, and a moderate amount of SRAM. The boot ROM contains a small amount of boot-strap code, which is capable of very basic spacecraft operations -- initialization code, keep-alive functionality, and communication code. In addition, a number of utility functions such as memory error detection and correction (EDAC) routines are present on the boot ROM. This ROM is pre-programmed on the ground before flight, and its contents cannot be changed after launch.

The boot ROM is a 128 kB (64K x 16 bit) in size. Although the boot ROM does not utilize hardware EDAC, the type of memory cell utilized is inherently resistant to radiation upset.

The OBC is equipped with 32 MB of Flash, which is configured for both reading and writing. This memory is used for storage of bulk data, as well as for storage of high-level software and firmware updates uplinked from the ground. The internal organization of the Flash is such that it is possible to partition it internally into independently-located data and error-correction bits; this allows for the use of software EDAC to correct for radiation-induced errors. However, only that portion of Flash that is used for firmware storage will be error-corrected. Memory that is used for storage of imager data is not corrected.

Data that needs to be frequently modified is stored

in on-board SRAM. The OBC carries 2 MB (256K x 16 bit) of SRAM. Like the other memory used, this SRAM is periodically washed by two independent software EDAC routines; each routine is capable of correcting the other. The exact EDAC algorithm has yet to be determined, but is likely to be some form of Hamming or Reed-Solomon encoding.

The OBC provides a rich set of hardware peripherals, which greatly simplify the spacecraft hardware design. These peripherals include:

1) 136 kB of SRAM present on the processor chip itself
2) A hardware watchdog, suitable for triggering processor resets in extreme fault cases
3) Two USARTs with multiplexed serial ports. These serial ports are used to communicate with other subsystems and payloads as well as various on-board voltage, current, and temperature sensors via a one-wire bus.
4) General-purpose digital I/O pins. These are used to control various devices such as power switches, transmitter push-to-talk, etc.
5) A DMA controller, which is used for reducing the CPU overhead associated with large serial port data transfers.

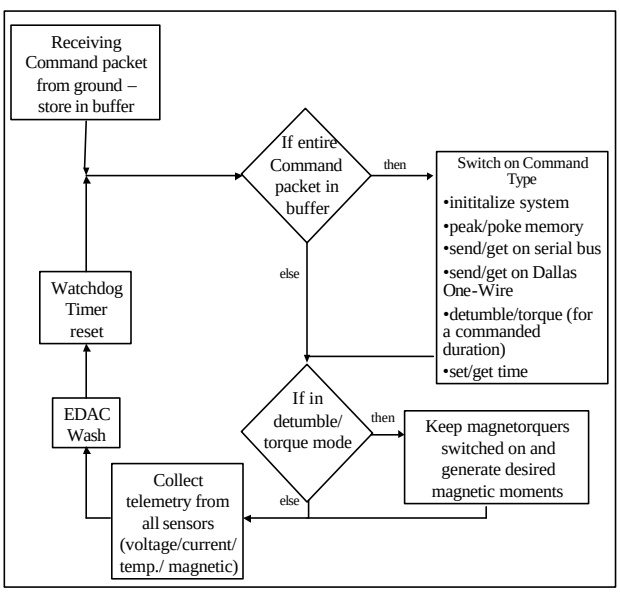

Figure 10: Software Flow Diagram

3.2.2 OBC Software

The OBC software is based on a single-loop architecture, as outlined in Figure 10. The loop acts on events as they occur, in addition to servicing a number of background utility tasks.

A minimum set of software that will allow for low-level operations of the spacecraft will reside on the bootrom. Higher level functions as well as software updates are uploadable through the Telemetry and Command (T&C).

3.3 Telemetry & Command

The T&C subsystem is responsible for communication between the spacecraft and the ground station. The spacecraft segment consists of a radio receiver, a radio transmitter, antennas, antenna switching hardware, and a terminal node controller (TNC).

The spacecraft transmitter is based on a 900 MHz BPSK design with forward error correction, capable of providing 23 dBm of RF. The transmit frequency is hard set before launch. Any Doppler correction will be performed by the ground station. Baseband data for the radio is generated using the satellite TNC, and keying and sequencing signals are provided by the OBC.

The spacecraft receiver is based on a 900 MHz FM design. Similar to the transmitter, the receive frequency is set prior to launch, and Doppler correction will be performed by the ground station.

Table 3: Transmitter Characteristics

DC power	330 mW
Carrier Frequency	925.286 MHz
Intermediate Frequency	166.287 MHz
Link Margin @ 4800 bps	8.3 dB

Table 4: Receiver Characteristics

DC power	33 mW
Carrier Frequency	910.7 MHz
Intermediate Frequencies	49.3 MHz, 10.7 MHz
Sensitivity	-109 dBm
Link Margin @ 4800 bps	4.8 dB

The satellite transmitter and receiver are both attached to a Push-To-Talk (PTT) circuit controlled by the OBC. The common terminal of this switch is connected to two T-shaped antennas, printed between solar cells on two of the S/C faces (one opposite the other). The resulting combined antenna pattern is nearly omni-directional, permitting communication with the ground station regardless of spacecraft orientation.

The transmitter includes an integrated modulator, and accepts digital data directly from the OBC. The receiver is connected to a single-IC modem located on the OBC board. The data rate is set prior to launch. The modem supports data rates of 1200, 2400, and 4800 bps, however the exact data rate will be chosen based on ground-station design and results of radio-frequency interference tests.

3.4 Power

3.4.1 Design Requirements and Constraints

The primary function of the power subsystem (PS) on CanX-1 is to provide regulated power to subsystems and payloads. This includes providing correct voltage and current levels. The PS must also provide over-current protection to the subsystems and payloads. Finally, the PS must be able to switch on and off all payloads, the magnetometer, and the torquers, as there is not enough power available to keep all the payloads and the attitude control system operating at the same time. The most stringent constraints to the PS are mass and temperature range. It is desired for the PS to be no more than 35% of the entire satellite mass. Also, the PS must be able to operate in a temperature range of –20 to +85°C.

3.4.2 Hardware

The PS consists of a battery pack, solar arrays, peak power tracker, shunt regulator, and power distribution module.

The battery pack is used to store power generated when CanX-1 is in the sunlight. It should be noted that the battery pack is only used as a power source during periods of high power demands or when the satellite is in an eclipse. The battery pack used is made by Nexergy Inc. and consists of three Polystor lithium-ion cells connected in parallel, resulting in a 3600 mAh nominal capacity at 3.7 V. These batteries have a prismatic shape, making it easier to fit within the cubic confines of CanX-1. The major advantage of this battery pack is that the high voltage available from the lithium-ion cells making it unnecessary to place any of the cells in series. The total mass of the battery pack is 114 g, while the charge and discharge temperature ranges are 0 to 40°C, and –20 to 60°C, respectively.

Solar arrays are used as the power source during sunlight. The solar arrays consist of six solar panels connected in parallel which are located on the outer surfaces of CanX-1. Five of the six panels will employ one solar cell string consisting of two Emcore solar cells. The solar cells are triple-junction gallium-arsenide, having a minimum efficiency of 18%. These cells are connected in series to give 4.4-5.0 V of output voltage. Each panel will generate 1.63 W, assuming a worst-case operating temperature of 80°C, end-of-life efficiency of 25%, a conversion efficiency of 90%, and an on-orbit sun radiative power flux of 1367 W/m^2. The supporting electronics for each solar panel is located on the under surface of the solar panel. As a result, rectangular cutouts are required in every aluminum wall of CanX-1. Due to the imager bore sights located on the +Z face of CanX-1, the solar panel on that face has only one Emcore solar cell. Therefore, a peak-power tracking system is implemented for this solar panel to keep its power output balanced with the other panels. The peak power tracker software on the OBC is based on the Perturbation and Observation method and uses the solar cell voltage and current telemetry to adjust the duty-ratio of the peak power tracking circuit to track the peak power point.

For charge regulation, a shunt is present on each of the solar panels. This regulator directs the recharge current from the solar cells into a resistive load once the battery voltage exceeds its maximum overcharge voltage.

Power is permanently supplied to the OBC and radio, while power to the rest of the subsystems and payloads are switchable and are controlled by the OBC. Each power distribution line incorporates a current-limit switch that cycles the power in the event of over-current condition.

3.4.3 Power Budget

CanX-1 power consumption varies depending upon its orbit and operation scenarios. Therefore, the worst-case scenario is assumed for power budgeting and margin analysis. The worst-case assumes a complete operation per orbit, in which all subsystems and payloads are being used at their respective allocated time. This case further assumes worst-case power generation. Table 5 below shows the results of the power budget analysis. It can be shown that there is a positive energy margin of 0.19 Wh per orbit. This assumes a 97 minute orbit with 60 minutes of sunlight.

Table 5: Power Budget

Subsystem	Power W	On Time Min	Energy Use Wh
OBC	0.38	97	0.61
Receiver	0.15	97	0.24
Transmitter	1.11	10	0.19
Magnetorquer	1.00	10	0.17
Magnetometer	0.23	48	0.18
Imager	0.30	10	0.05
		Average usage per orbit	1.44
Minimum Array Power	**1.63**	**60**	**1.63**
		Margin	0.19

3.4.4 Power System Summary

The prototype CanX-1 Power Subsystem has been built and is currently undergoing tests to evaluate its performance to ensure it complies with the mission

power requirements. The power subsystem for flight will be finalized and built after the performance of the prototype has been verified.

3.5 Thermal

3.5.1 Constraints and Requirements

The goal of the thermal subsystem is to ensure that all components are operating within their desired temperature ranges. Due to the volume and power constraints of CanX-1, passive control methods in the form of thermal coatings and/or insulation are preferred.

The operating ranges of different components of CanX-1 drive the thermal requirements, as well as the power dissipated and exposure to the external environment. Table 6 is a summary of thermal operating ranges for the vital components on CanX-1. Of these components, the battery portion of the power subsystem is the most thermally constraining. Past experience with charging and discharging of batteries at temperatures less than zero degrees resulted in a significant decrease in charge capacity.

Table 6: Thermal operating ranges of the vital components on CanX-1

Component	**Min. Temp. (°C)**	**Max. Temp. (°C)**
On board computer	-40	85
CMOS Imager (Operation)	-5	65
CMOS Imager (Storage)	-40	85
Battery (Charge)	0	40
Battery (Discharge)	-20	60
Power Electronics	-55	85
Transmitter & Receiver	-40	85

A thermal model of CanX-1 was made for both orbital scenarios using I-DEAS. CanX-1 must be designed to work in the worst thermal conditions of the two orbital scenarios.

3.5.2 Multi-Node Analysis

A multi-node thermal model of CanX-1 has been developed using estimates for solar flux, Earth albedo and emitted IR, and conductances and capacitances based on material properties (emissivity and absorptivity) and geometry. Various surface properties have been used in the analysis, representing the selection of coatings that may be used. The satellite was placed into a 0.1 deg/sec tumble for this analysis. The temperatures in this model ranged from 41ºC to -27ºC for the noon-midnight sun-synchronous orbit, and from 45ºC to -16ºC for the dawn-dusk sun-synchronous orbit.

3.6 Attitude Control System

3.6.1 Design Requirements and Constraints

The design requirements for the ACS on CanX-1 are driven by the CMOS imager payload. It is desired to have control over the tumbling rates of CanX-1 such that clear pictures of the Earth and stars can be taken. However, it should be noted that the goal of the ACS is not to detumble the satellite such that rotation rates about each body axis are zero. This is because both imager bore sights are located on the +Z face of the satellite. Therefore, slow rotations about the Y and/or X axis are desired so that pictures of both stars and Earth can be taken in relatively short periods of time.

The most stringent constraints for the ACS are mass, power, and volume. It is desired that the total mass of the ACS be approximately 10% of the satellite total mass. Also, the maximum power allocated to the ACS is 1 W. The ACS must also be small enough to fit inside CanX-1, and be able to operate without interfering with the other satellite systems.

To control the angular momentum of the satellite, the ACS must be able to overcome disturbance torques experienced during its orbit. Worst-case disturbance torques are estimated according to Wertz [1]. From these calculations it is determined that control torques on the order of 10^{-6} N-m are required to sufficiently control the satellite.

3.6.2 Magnetic Control

Several schemes were considered for the ACS of CanX-1. These included momentum wheels, a gravity gradient boom, pressurized gas thrusters, and magnetic control. After some initial research it was determined that magnetic control offered several advantages over the other alternatives. Magnetic control requires no moving or deployable parts and is compatible with the structural bus of the satellite. Magnetic control is lightweight and can be designed to use little power, making it attractive considering the design constraints. The ACS will consist of three torquer coils, and a three-axis magnetometer. For detumbling purposes, a B-dot control algorithm will be implemented as part of the OBC software.

3.6.3 ACS Hardware

Three orthogonal copper coils are used as the actuators for the ACS (see Figure 11). When current is supplied to the coils, magnetic dipole moments are generated, which interact with the Earth's magnetic field to produce control torques. In designing these coils the goal is to maximize the resulting magnetic

dipole moment, while complying with the constraints of the ACS. Two methods considered for developing the coils are wound copper coils, and copper etching on PCB panels. Wound copper coils result in larger magnetic dipole moments, while being less complicated to construct. The coils are located between the exterior solar cell PCB panels and the aluminum structure, on the –X, -Y, and –Z faces of CanX-1. An AWG 32 gauge magnet wire coil is most optimal given the constraints. This coil has average dimensions of 75x55x3 mm, with 380 turns. The mass of each coil is 21 g, while the maximum power dissipated by each coil is 333 mW. The resulting magnetic dipole moment is 0.106 A-m^2 per coil, resulting in a worst-case control torque of 2.33x10^{-6} N-m, and therefore has authority over disturbance torques experienced during orbit.

A three-axis magnetometer is required to measure the Earth's magnetic field. The magnetometer aboard CanX-1 is a Honeywell HMR2300 smart digital magnetometer. Data is outputted from this magnetometer serially, making it easy to interface with the OBC. Some advantages of this magnetometer over other alternatives include, low mass, small size, high sensitivity, fast response, and high reliability. The magnetometer board weighs 28 g, and has dimensions of 74.9x30.5 mm, while consuming a maximum power of 0.228 W, therefore it meets mass, volume, and power constraints. With a range of +/- 2 Gauss, a resolution of 70 μGauss, and a selectable sampling rate between 10 and 154 samples/sec, this magnetometer can be used to accurately calculate changes in the Earth's magnetic field.

The OBC receives three signals from the magnetometer using a serial RS-232 port, and the control software has access to these signals and decides which, if any, of the torquer coils to turn on. Each coil is controlled using Digital I/O lines. The circuit controlling the torquers is capable of changing the polarity of each coil and ensures that a constant current is supplied to each coil. This means that each coil is either full on or full off.

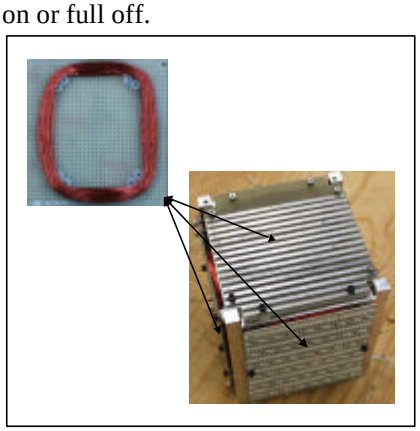

Figure 11: Magnetorquer Coil Prototype

3.6.4 Control Law Description and Implementation

The main requirement for the control algorithm is to detumble the satellite once it is ejected from the P-POD. This can be done using the B-dot magnetic control law. This control law works by reducing the kinetic energy of the satellite due to rotation about its mass center. When implementing the control law on CanX-1 several factors need to be taken into account. These include initiating the control algorithm, the location of the magnetometer, and available power. Due to limited space, there are no rate sensors on board CanX-1. Therefore there is no way of getting tumbling rate readings. As a result, detumbling is initiated by a command given to the housekeeping computer from the ground station. The command contains the run time of the detumbling algorithm. Due to the close proximity of the torquers and the magnetometer, the torquers have to be shut down when the magnetometer is taking readings, and then turned on for a set amount of time once B-dot is calculated. This time is somewhat dependant on the tumbling rates. Other subsystems are shut down during detumbling, therefore the magnetic dipole of the satellite should remain relatively constant during the process and can be subtracted from the magnetometer readings. A flow chart of the ACS control law is shown in Figure 12.

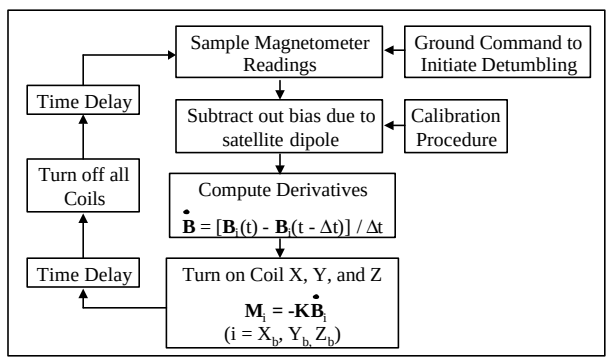

Figure 12: ACS Control Law Flow Chart

3.6.5 Simulations

Preliminary simulations have been performed to determine the effectiveness of the control law. The simulations are obtained by numerically integrating Euler's equations using Euler parameters as attitude parameters. The following assumption are used: (a) the orbit is a 650 km altitude, sun-synchronous orbit, with a dawn-dusk line of nodes, (b) the magnetic field is a tilted magnetic dipole, and (c) CanX-1 is a homogenous cube having a mass of 1 kg. To simplify the simulation, disturbance torques are neglected. In simulation, the satellite is given initial rotation rates of 5°/sec about each body axis. The Δt for calculating

B–dot is set to 2 seconds, and the torquers are turned on for 10 seconds each time. The torquers are turned on when the required magnetic moments are greater than 0.05 A-m^2, or less than –0.05 A-m^2. The results show that the satellite detumbles to rates lower than 1.0°/sec about all three body axes in 600 seconds. These results are promising and show that this system meets the requirements for the ACS system of CanX-1.

3.7 Imager Payload

CanX-1 carries two independent high-resolution CMOS imagers, together with associated optics and electronics. The purpose of these imagers is to:

1) Validate the use of spaceborne CMOS imagers for science and engineering.
2) Provide starfield images for the purpose of attitude determination via star- and Moon-tracking, as well as Earth-horizon tracking.
3) Provide educational images of the Moon and the Earth.

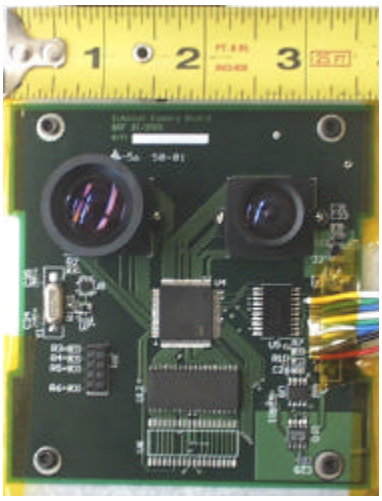

Figure 13: CanX-1 Imager Board

In order to accomplish these tasks, two independent imagers are used. The imagers are COTS CMOS imaging chips manufactured by Agilent Technologies. Details on the imagers are available in Table 7. The imagers, along with their support electronics and frame buffers, are mounted on their own circuit board (see Figures 13 & 14), and have boresights in the direction of the +Z-axis of the spacecraft. Communication with the OBC is via a high-speed serial bus.

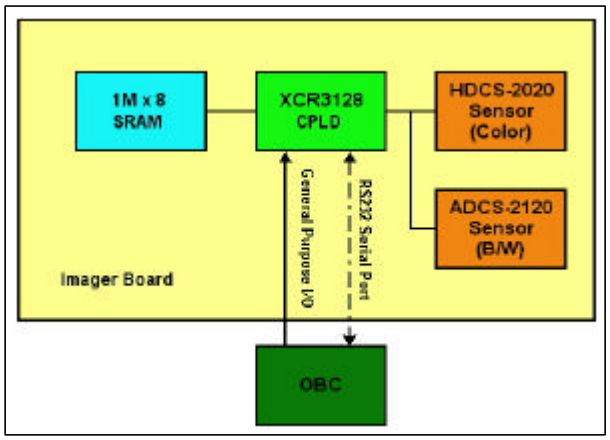

Figure 14: Imager Board Layout

Each imager has its own lens system. The color imager utilizes a wide field-of-view (FOV) lens. This makes it suitable for imaging the Earth and the Moon. The monochrome imager uses a narrow FOV lens system. The lenses are of fixed focal length and fixed focus. As a result, they need to be focused while on the ground and fixed in position.

Table 7: Imager Characteristics

	Color	Monochrome
Model	HDCS-2020	ADCS-2120
Quantum Eff.	33%	38%
Fill Factor	42%	42%
Lens Focal Length	2.1 mm	25 mm
Lens Aperture	f/2	f/2.5
Diag. FOV	112º	14º
Res. @ Nadir	1.5 km/pixel	200 m/pixel
Power	200 mW	200 mW

At present, only a minimum of image processing is to occur on-board the satellite. Current plans are to compress the image using a standard lossless compression algorithm, such as the popular ZIP program, and then to downlink the image to the ground station for further processing.

Once on the ground, the downlinked images are processed according to their end-use. For color images, the imager's Bayer-format pixel data must first be converted into usable RGB images, using any one of the standard algorithms available. For star-tracking, the Search-Less algorithm is used to determine the orientation of the imager (and, hence, the spacecraft) in relation to the sidereal coordinate frame.

If the imaging system proves to be sufficiently robust, and if the OBC has sufficient spare computational ability, a possible future experiment is to provide the satellite with autonomous on-board star tracking functionality.

3.8 GPS Payload

CanX-1 carries a compact commercial GPS receiver along with associated antennas. This receiver will be used for coarse determination of orbit parameters.

The receiver is a Superstar GPS OEM board, from CMC Electronics (see Table 8). This board is a complete GPS receiver, capable of tracking 12 satellites. It communicates with the OBC via a standard serial link. The antennas used are T-type antennas, printed, like the T&C antennas, on two opposite satellite faces. In order to simplify the system, the antennas are passive.

Table 8: GPS Characteristics

Power	**1.2 W max**
Dimensions	46 x 71 x 13 mm
Weight	22 g
Sensitivity	-135 dBm

3.9 Current Status of CanX-1

Most of the CanX-1 subsystems have been completely designed and built. At the time of the writing of this paper, the power board, the solar panels, and the wiring harness, are currently being finalized.

The CanX-1 subsystems that have been built are being integrated together into a table-top "flatsat" configuration. Environmental testing, which includes thermal, vacuum, and vibration tests, will begin in June.

4. CanX Program

The UTIAS/SFL CanX program is intended as a research and development vehicle providing cost-effective access to space for industry and researchers in Canada as well as abroad. The program and its spacecrafts are suitable for various activities:

- Testing new technologies.
- Validating advanced subsystems to be used in larger, future missions.
- Validating initial experimental hypotheses.
- Performing full on-orbit experiments.

The internal design and arrangement of the CanX picosatellite has been made as flexible as possible with plans for future missions in mind. This allows the picosatellite to incorporate almost any payload that meets the overall volume, mass, and power restrictions of the picosatellite. The only permanent circuit boards in the CanX picosatellite are the power/radio and OBC circuit boards (boards 2 and 3 in Figure 5), leaving over 50% of the volume and 25% of the mass to the payloads. These circuit boards can also be placed anywhere along the Z -axis of the picosatellite so that payloads of various sizes can be accommodated. The current design provides access to the external environment through half of the –Z face. If necessary, more access area can be made available through redesign of the solar array.

With its very small size and great capabilities, the CanX picosatellite will be a valuable addition to the Canadian space program.

5. Acknowledgments

The authors want to thank the National Science and Engineering Research Council (NSERC) of Canada for its generous support of their university studies.

The authors and advisors want to thank the following funding partners of the CanX program: CRESTech, MD Robotics, and UTIAS.

The authors and advisor also want to thank the following sponsors: Agilent Technologies, Altium, ARC, CalPoly, CMC Electronics, E. Jordan Brookes, EDS, Emcore Photovoltaics, Honeywell, and Stanford University.

Finally, the authors and advisor want to thank the following individuals for their contributions to the CanX program: Alex Beattie, Hugh Chesser, Paul Harrison, Doug Johnson, and Henry Spencer.

6. References

[1] Larson, W. J. and Wertz, J. R., *Space Mission Analysis and Design*, 3rd ed., Kluwer Academic Publishers, Dordrecht, Holland, 1999.

[2] Puig-Suari, J., Turner, C., Twiggs, R.J., "CubeSat: The Development and Launch Support Infrastructure for Eighteen Different Satellite Customers on One Launch," Proc. 15th Annual AIAA/USU Conference on Small Satellites, Logan, Utah, 2001.

[3] http://www.amsat-dl.org/yahue.html