The Ultrasonic Piezo Drive
An Innovative Solution for High-Accuracy Positioning

René Seiler
European Space Agency (ESA/ESTEC)
Keplerlaan 1, P.O. Box 299, NL-2200 AG Noordwijk, The Netherlands
Phone: +31 – (0)71 – 565 5551, E-mail: rene.seiler@esa.int

Marc François Six, Miguel Debarnot, Ronan Le Letty, Frank Claeyssen
CEDRAT TECHNOLOGIES
10 ch. de Pré Carré, ZIRST, F-38246 Meylan Cedex, France
Phone: +33 – (0)4 – 7690 5045, E-mail: cedrat@cedrat.com

Abstract. Piezo-electric motors have been successfully developed for various applications like autofocus drives in camera lenses and handling equipment for semiconductor production. Their high speed and accurate positioning capability, combined with a favourable holding torque in unpowered condition, make piezo motors also very attractive for actuation purposes in spacecraft mechanisms. However, so far only a few studies have been reported considering their suitability for actual use in space.

Piezo motors use a combination of piezo-electric and friction forces to generate a progressive motion of an output element. Such output motion can be a linear translation or a rotation in accordance with the actuation requirements of a particular application. Since piezo motors rely on friction at a controlled mechanical contact interface, the related tribology in vacuum and under varying temperature conditions is of critical importance for the function and operational lifetime of such motors.

The paper introduces a new concept of a versatile piezo motor driven at ultrasonic frequency, and it elaborates on a number of space-related issues like the compatibility with the relevant mechanical and thermal environment. Furthermore, the possible implementation in different space mechanisms is discussed, with specific focus on miniaturised equipment as needed for small satellites.

Introduction

For more than 20 years, motor concepts relying on the piezo-electric effect have been devised, and a number of industrial applications have reached a remarkable level of maturity within the last decade. More recently, several entities have started to investigate their suitability for utilisation in space.[1] One of the first in-flight experiments applying small rotary piezo motors is envisaged with the Micro-Imaging Dust Analysis System (MIDAS) onboard ESA's comet exploration mission ROSETTA.[2]

The paper introduces a new architecture of piezo motors based on a versatile stator unit called the Ultrasonic Piezo Drive (UPD). Compared to typical electro-magnetic DC and stepper motors, piezo motors offer special characteristics, which might also be very attractive for future space applications, for instance:

- Non-powered holding torque in the same range as the maximum driving torque
- High positioning accuracy in direct drive mode
- Feasibility of non-magnetic motor designs

In the earlier stages of the development, a linear piezo motor has been built by CEDRAT TECHNOLOGIES for a refocusing mechanism in a space-borne telescope.[3,4] Currently, several prototypes of rotary piezo motors are being manufactured and tested.

Basic Principle of Operation

One of the limiting factors regarding the application range of direct piezo-electric actuators is their typically small absolute stroke. For modern piezo ceramics, the maximum achievable strain is approximately 0.125 %.

However, by producing consecutive step-type displacements at a microscopic scale, a quasi-continuous linear or rotary output motion at macroscopic scale can be accomplished. This has lead to the idea of a piezo motor.

In order to generate the desired step motion, different excitation concepts can be pursued:

- *Quasi-static excitation* at a frequency far below any mechanical resonance of the motor assembly
- *Transient excitation* using a combination of quasi-static and dynamic effects
- *Harmonic excitation* close to a mechanical resonance frequency of the motor assembly

The class of ultrasonic motors utilises harmonic excitation at a resonance frequency in the ultrasonic range.[5] They comprise standing wave and travelling wave motors as well as concepts utilising mode conversion, pure rotation modes or multiple vibration modes.[6] The piezo motor concept by CEDRAT TECHNOLOGIES belongs to the category of multiple-mode ultrasonic motors.[7] It relies on the generation of a vibratory elliptic locus to drive a movable output member as schematically outlined in Figure 1 (not to scale). The Ultrasonic Piezo Drive (UPD) unit or stator of such a motor consists of the following main components:

- two piezo stacks,
- a shell structure, and
- a central counter mass.

For the piezo stacks, Ceramic Multi-layer Actuators (CMA's) are applied as the CMA technology offers a strain well above that of bulk piezo-electric materials, combined with favourable electric field conditions.

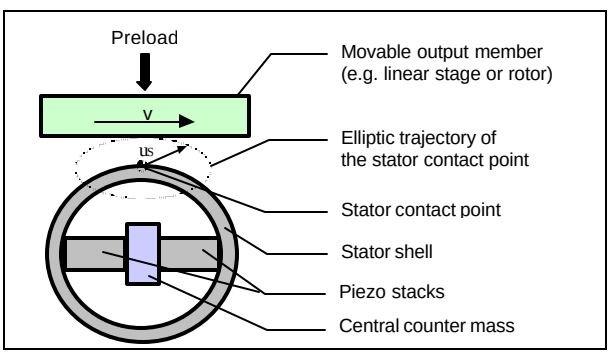

Figure 1: UPD-based motor concept

The shell is surrounding and preloading the piezo stacks, while the counter mass contributes to the control and tuning of the overall stator dynamics. Such configuration shows two relevant mechanical vibration modes, which occur at resonance frequencies very close to each other:

- a *flexural mode* that produces a displacement normal to the stator contact surface (Figure 2), and
- a *translation mode* that produces a displacement tangential to the stator contact surface (Figure 3)

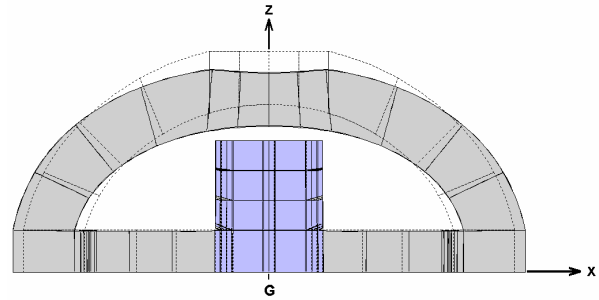

Figure 2: FEM simulation of the flexural mode

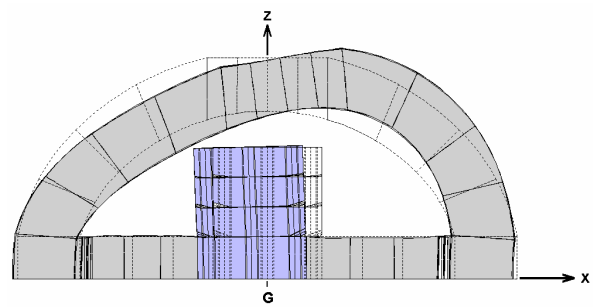

Figure 3: FEM simulation of the translation mode

For symmetry reasons, only the upper half of the stator is shown in above figures. By superimposing the two vibration modes, a vibratory elliptic locus of the stator reference contact point can be obtained (see Figure 4).

The stator will be brought in contact with a movable output member, which can feature a flat contact surface for a linear translation as shown in Figure 1 or a cylindrical surface for a rotation. A play recovery mechanism is used to press the stator against the movable member in order to make sure that the preload remains unaffected by wear or thermo-mechanical strains. Under the presence of a preload, the non-powered motor is hold in position by a static friction force or torque, respectively. When the stator is electrically excited at the working frequency, the resulting vibrations induce a movement on the output member relative to the stator.

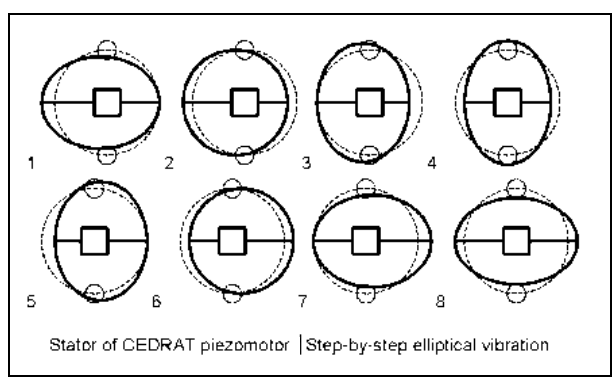

Figure 4: Basic motion sequence of the vibrating stator

In addition to the application of a defined preload, the stator has to be properly guided in order to avoid any undesired stator displacement, e.g. a tilt rotation in reaction to an external loading torque. The play recovery and stator guiding functions are embedded in the stator housing design, which furthermore isolates the ultrasonic vibrations of the stator from the external interfaces of the motor.

Motor Concept Options

Two basic sizes of vibrating stator units have been developed so far. They are designated UPD20 and UPD60, where the number indicates the approximate drive frequency in kHz. Starting with the stator design as a technology core, different motor configurations can be conceived as described in the following paragraphs.

Linear Motor

The stator can directly drive a linear stage as shown in Figure 5. An actuation force in the order of 1 N and a linear speed of 70 mm/s have been achieved. In such a configuration, the linear stage requires special attention with respect to space-compatible lubrication and preload application.[8]

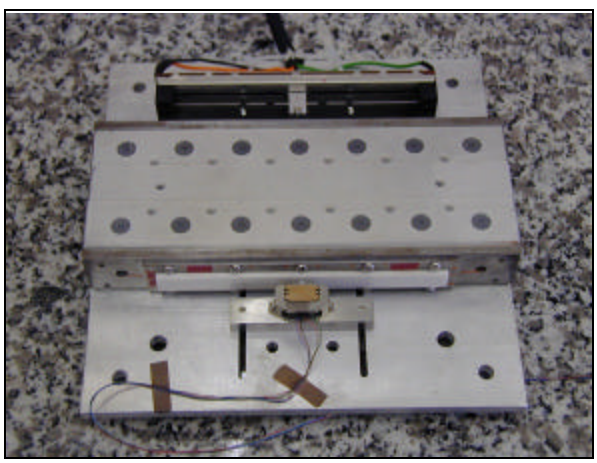

Figure 5: UPD60 drive unit actuating a linear stage

Small Rotary Motor

If output rotation is required, the stator can drive a small roller leading to high-speed and low-torque characteristics. In Figure 6, motor type RPM60 is presented. The roller is mounted with the output shaft on top of the stator unit. A motor with 20 mm diameter can produce a torque of 7 mNm and reach a no-load speed of 1000 rpm. A prototype motor of this kind has successfully passed a random vibration test at the French Space Agency CNES.

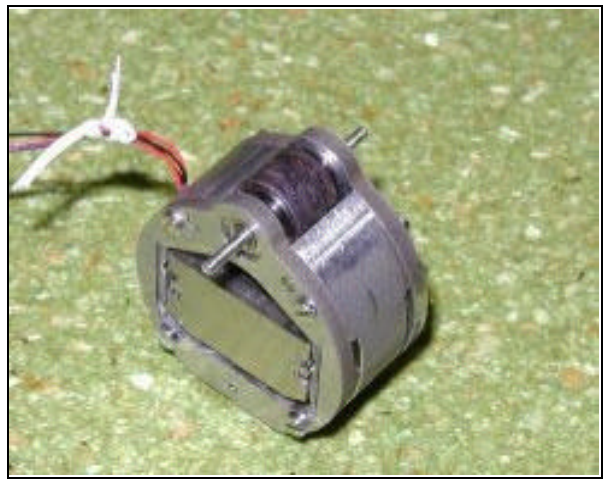

Figure 6: Small rotary motor – type RPM60

Large Rotary Motor

Alternatively, the stator can drive an annular or cup-type output member with larger diameter, while it is accommodated either inside or outside the overall assembly. The configuration in Figure 7 has been studied in more detail, aiming at a space compatible design with an extended operational temperature range.

Figure 7: Rotary motor configuration with internal Ultrasonic Piezo Drive unit (top cover not shown)

Above-listed concept options underline the versatility of the overall motor/actuator design utilising the same UPD stator assembly. By changing the diameter of the output element in a rotary motor configuration, the torque-speed characteristics can be tailored to the application over a wide range. Furthermore, the motor function can be closely integrated with the target application. For instance, the UPD stator can directly interface with a contact ring at the outer surface of the item to be moved.

Space-Compatible Design

The present development is focussing on a multi-purpose rotary motor for use in space mechanisms. Some target characteristics for the motor are summarised in Table 1.

Table 1: Motor key characteristics

Parameter	Target Value
Maximum drive torque	0.1 … 0.2 Nm
Static holding torque	0.15 … 0.25 Nm
Maximum speed	100 … 200 rpm
Operational temperature range	–140 … +140 °C

A CAD view of the new motor configuration is shown in Figure 7. The motor has an external diameter of approximately 70 mm and a height of about 30 mm. The stator is visible inside the annular housing and integral bearing assembly.

Special attention is given to the suspension of the output member or rotor. A duplex angular-contact ball bearing in O-configuration has been selected to support external loads, e.g. due to launch vibrations, as well as the internal radial preload between rotor and stator.

The motor can operate in air and in vacuum, which is assured by the appropriate choice of bearing lubricants, insulation materials, etc. Furthermore, in view of the large target temperature range, material combinations with suitable coefficients of thermal expansion and thermo-optical properties have been selected.

The friction contact between the stator and the rotor represents a critical function for correct operation of the motor. It should behave similarly in air and in vacuum. In general, a high friction coefficient and a low wear rate should be maintained throughout the lifetime of the motor.

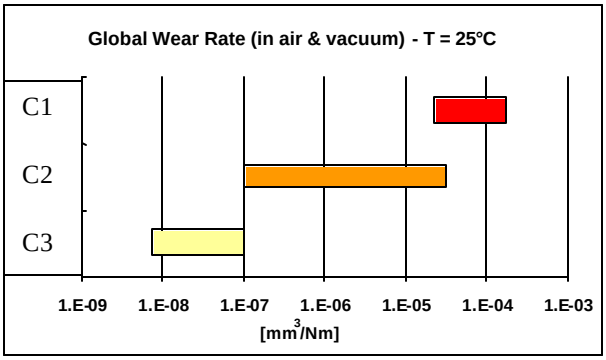

Figure 8: Wear rates of three ceramic contact materials under reciprocating motion

Dedicated sample tests were performed on a pin-on-disc tribometer in order to compare the behaviour of different friction layer materials at several temperatures in air and in vacuum. In conclusion from those tests, a ceramic-based solution was preferred to polymer materials because it turned out to be very difficult to find a polymer that can sustain high temperatures and provide a high friction coefficient at the same time.

Figure 8 indicates the ranges of wear rates for different ceramic materials measured on the tribometer. In the course of the tests, it has been also confirmed that the surface roughness at the friction interface plays an important role for efficient motor operation.

The laboratory-standard electronics as presently used for motor test purposes are shown in Figure 9. They include the electronics unit for a capacitive position sensor, the US100 motor drive electronics and a micro-controller based interface & closed-loop control unit.

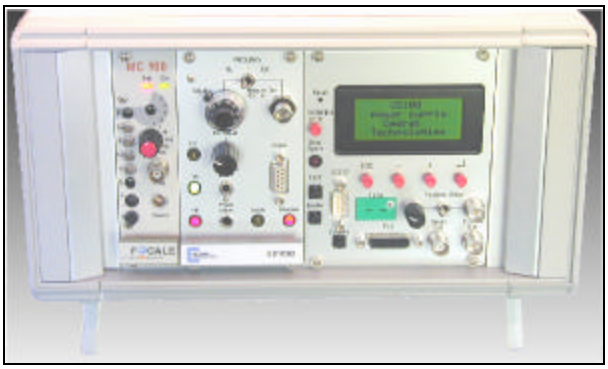

Figure 9: Laboratory motor drive and control electronics

The core of the US100 drive electronics consists of a switching inverter. In addition, a DC/DC converter has been developed for power supply via an unregulated bus of a space platform. Presently, the design of compact electronics compatible with the launch and space environment is pursued.

Functional Test Results

In a first phase, a prototype of the small rotary motor RPM60 was built and tested. The elliptic vibration locus at the stator contact interface has been verified by using two laser vibrometers. Typical test results are presented in Figure 10. The absolute size of the achievable displacements (less than 4 µm in normal direction and about 3 µm in tangential direction) underline the related impact on the motor design in terms of tolerance to wear, thermal expansion and other adverse effects.

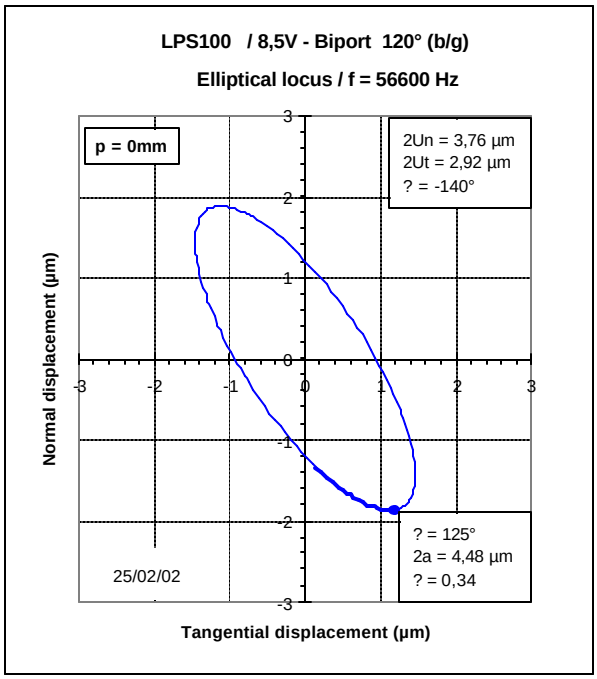

Figure 10: Measured elliptic locus at the stator-rotor contact interface

In the course of additional tests, the motor performance vs. external load was characterised. Furthermore, the fine positioning capability of the motor has been demonstrated. Step sizes as small as 0.05° were obtained, whereas no electrical power is needed to maintain the target position at zero speed. In Figure 11, the positioning performance is illustrated: the upper curve shows the (non-scaled) rotor position signal, and the lower curve indicates the mean step size versus time. By using a more sophisticated commanding scheme, it is possible to even further increase the positioning accuracy: a resolution of 100 nm has been recently obtained with a Linear Piezo Motor LPM20. In this regime, the resolution of the position sensor becomes a limiting factor on the achievable performance.

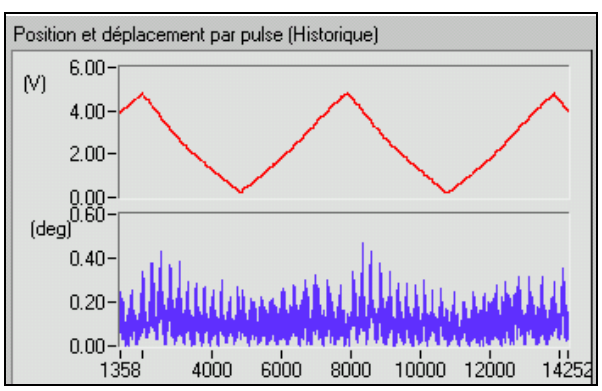

Figure 11: Sub–micron positioning capability

Future Application Prospects

In Figure 12, the rated output torque and speed performances of various ultrasonic piezo motor configurations are plotted, together with some reference application cases.

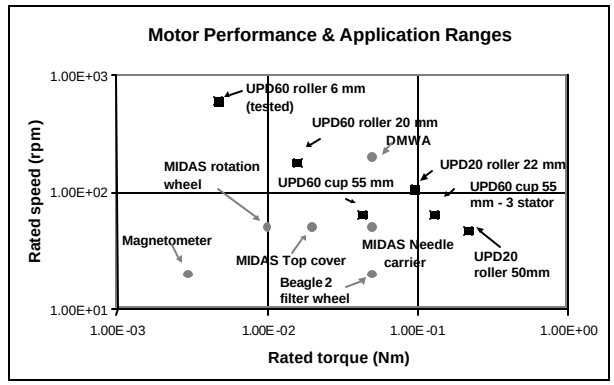

Figure 12: Comparison of identified needs and achieved or expected motor performances

It has been found that for many local actuation purposes, specifically in the frame of small satellite missions, torque values below 0.1 Nm at moderate speeds are sufficient. In this domain, direct-drive actuation by piezo motors becomes particularly attractive. Areas of potential applications in the frame of small satellite missions include:

- Instrument actuation (aperture covers, filter wheels, focusing systems, camera steering devices, etc.)
- Experiment automation and robotics (rotary joints of small robotic arms, miniature grippers, etc.)
- Deployment and pointing of satellite appendages (e.g. antennas and solar panels)

One of the most interesting application domains is expected in conjunction with "magnetically clean" spacecraft, i.e. with the feasibility of completely non-magnetic piezo actuators. For an increasing number of scientific instruments like e.g. magnetometers, the magnetic cleanliness becomes a key issue.

Appropriate shielding of conventional electro-magnetic motors can require a high effort for magnetic circuit modelling with time-consuming iterations on the flux computations, and it often leads to a considerable mass penalty. Moreover, the presence of a residual remanent magnetic field onboard a spacecraft can lead to unacceptable interactions with the Earth's magnetic field. This aspect might become even more critical when considering small satellites.

A promising option to circumvent any magnetic cleanliness problems can be found with the fully non-magnetic working principle of piezo motors, combined with the right choice of materials.

Conclusions and Outlook

The presented piezo motor technology has the potential to provide high-accuracy positioning for spacecraft instruments and mechanisms in a way complementary to existing electro-magnetic motors.

The vacuum compatibility and lifetime of the new rotary motor design shall be demonstrated in the near future. Further work shall also concentrate on the drive electronics and on the implementation of advanced commanding schemes for closed-loop positioning control. It is anticipated that with a hollow-shaft assembly, an accuracy of 5 µrad can be reached. Such precision would by far exceed the one obtained with other technologies like rotating voice coil systems.[9]

The reliable performance of the motor over a large temperature range will be one of areas requiring specific attention. In this context, the stable behaviour of the stator unit, e.g. concerning the frequency difference between the two relevant vibration modes, might be very challenging.

Acknowledgements

The development of a rotary piezo motor for space applications is funded via the Technology Research Programme of the European Space Agency (ESA).

Furthermore, the authors would like to thank Mr. Ph. Guay from the French Space Agency CNES for having performed the vibration tests on the small rotary piezo motor.

References

1. Bar Cohen, Y., X. Bao, and W. Grandia, "Rotary Ultrasonic Motors actuated by Travelling Waves", SPIE vol. 3329, pp. 794-800, 1998.

2. Arends, H. et al., "The MIDAS Experiment for the ROSETTA Mission", Proceedings of the 9th European Space Mechanisms and Tribology Symposium, ESA SP-480, pp. 67-74, September 2001.

3. Six, M.F. et al., "Original Piezomotor for Space Applications", Proceedings of the 33rd Aerospace Mechanisms Symposium, pp. 151-156, Pasadena, CA, May 1999.

4. Pochard M. et al., "Smart Mechanisms for Optical Space Equipment", 48th IAF Congress, Torino, 1997.

5. Sashida, T. and K. Takashi, “An Introduction to Ultrasonic Motors”, Clarendon Press, Oxford, 1993.

6. Ueha, S. et al., “Ultrasonic Motors: Theory and Applications”, Clarendon Press, Oxford, 1993.

7. CEDRAT Homepage: http://www.cedrat.com

8. Lewis, S.W., "Building and Testing of MIDAS Instrument Sub–assemblies", Proceedings of the 9th European Space Mechanisms and Tribology Symposium, ESA SP-480, pp. 355-359, Sept. 2001.

9. Krause, O. et al., "Magnetoresistive Position Sensors for Cryogenic Space Applications", Proceedings of the 9th European Space Mechanisms and Tribology Symposium, ESA SP-480, pp. 335-338, September 2001.

Authors Information

René Seiler is working in the Mechatronics and Optics Division at ESA/ESTEC. He is the technical manager of research and development activities in the domain of new actuators for space mechanisms and spacecraft attitude control systems.

Marc François Six has received a Ph.D. on the design and analysis of a linear piezo motor in 2000. Currently, he is leading the development of piezo motors at CEDRAT TECHNOLOGIES.

Miguel Debarnot is working as electronics engineer at CEDRAT TECHNOLOGIES. In particular, he is responsible for the development and test of drive and control electronics for piezo motors.

Ronan Le Letty has received a Ph.D. on the modelling of ultrasonic motors in 1994. He is the project manager of research and development activities in the Active Materials Department of CEDRAT TECHNOLOGIES.

Frank Claeyssen is the technical manager of CEDRAT TECHNOLOGIES. He has received a Ph.D. on magnetostrictive transducers in 1989.