Preparing a COTS Radio for Flight - Lessons Learned from the 3 Corner Satellite Project

Stephen Horan and Lawrence Alvarez
Klipsch School of Electrical and Computer Engineering
New Mexico State University
Box 30001, MSC 3-O
Las Cruces, NM 88003
Phone: (505) 646-4856; (505) 646-1478
e-mail: shoran@nmsu.edu; lalvarez@nmsu.edu

Abstract. As part of the 3 Corner Satellite program, a commercial-grade amateur radio transceiver was adopted to be the main flight radio due to power, weight, and time constraints. While this particular item was not designed for space use, it did have features that would make it useful in the 3CS mission. In this paper, we will review the decision process that led us to choosing the radio and describe the process of modifying the radio for flight. This includes issues related to materials, modifications necessary to the radio to make it acceptable, the qualification testing required, and the validation that performance quality was not significantly lost in the process. During this process, we discovered that the radio can be made acceptable to the flight safety process provided that a thorough understanding of the components is achieved and a great deal of experimentation is done before hand to characterize the radio.

Introduction

The *Three Corner Satellite* (*3CS)* constellation is a cluster of three nanosatellites that are part of the US Air Force University Nanosat program. The *3CS* project was begun in January 1999 and the cluster of satellites is presently awaiting launch in 2003 from the Space Shuttle. The satellites are shown in their launch configuration in Figure 1. The *3CS* project is a joint effort of the faculty, staff, and students at the participating universities: Arizona State University (ASU), the University of Colorado at Boulder (CU), and New Mexico State University (NMSU). Consult the references for further details on the baseline design and mission concepts.[1,2,3]

The *3CS* mission has four primary and three secondary objectives. The primary mission objectives include: stereo imaging, virtual formation flying, inter-satellite communications, and end-to-end command and data handling. The science will include imaging of clouds and other atmospheric structures using a satellite formation. After deployment, the three satellites will operate together using formation flying techniques. This will be accomplished while using virtual formation communications, a technology that allows the satellites to operate as a network utilizing communication and data links. Finally, the formation will use distributed and automated operations. This allows both individual nanosats and the entire formation to be reconfigured for optimum data gathering, command and control, and communication.

The secondary mission objectives include: validation of a MEMS heater chip for a free molecule micro-resistojet propulsion system, demonstration of generic nanosatellite bus design, and student education.

One of the principal features of the *3CS* mission is that all three nanosats are based on

Figure 1 – Completed *3CS* nanosats in launch configuration.

a similar design. Each university has responsibility for different subsystems, and all components are designed to be common to each of the satellites. Each school's team is comprised of a faculty member and graduate and undergraduate students. Each school leads in its respective areas of expertise and on strengths proven on past projects as follows:

- ASU - program management, systems, structures, electrical power, micropropulsion, integration and testing, safety, configuration management and quality assurance
- CU - science (imaging), command and data handling, mission operations
- NMSU - communications

Using this team concept, the design was developed at the lead school with review and comment by the partner schools. In addition to the design work, the team members needed to verify that all components, materials, and design features would pass the NASA flight safety reviews for launch from the Space Shuttle. This paper concentrates on the design of the communications system that must operate with the overall cluster design and be produced to integrate with components developed at the other schools.

Design Considerations

To produce a flight radio system that would be usable across all three satellites, we needed to base the design on a tight set of constraints and design goals. The following paragraphs indicate the system constraints and the design goals for the flight radio.

Constraints

The largest constraint on the radio design was imposed by the power system. The total power budget for each satellite was expected to be approximately 10 W. From this, communications would be allocated 5 W from a regulated, 5-V power bus on a shared basis with other subsystems since communications would not be active at all times. The

requirement for the radio system was that it operate with an input voltage of 5 V and draw no more than 1 A when operating. Due to inefficiencies and the slim power margins to begin with, it was not considered effective to use a DC-DC converter to raise the input voltage to a higher level.

The next constraint was that the radio system would need to support command services, downlink services, and inter-satellite services. The intention was to use the available allocations in the UHF and VFH bands, respectively, for the first two services. The inter-satellite service would be run as an amateur radio experiment utilizing packet radio and APRS techniques. The minimum data rate for the command and inter-satellite services would be 1200 bits per second while the minimum data rate for the telemetry data would be 9600 bits per second.

The solution for the flight radio system would need to meet the *3CS* size and weight constraints. While this never became a major issue, the overall design team tried to minimize weight whenever possible because the satellite stack was always close to its maximum allowed weight based on launch constraints.

Any system that was chosen would need to pass qualification testing. The radio system would be designed to survive the Hitchhiker vibration qualification testing.[4] The radio would also need to survive thermal cycles from -20º C to + 60º C.

One design constraint that was explicitly not imposed was for the components to be radiation hardened. This decision was made, primarily, because the expected lifetime of the satellites on orbit would be only a few months. Given this short expected mission lifetime, it was decided not to expend the extra cost for explicit radiation hardening. The project team decided that between having the radios mounted in aluminum boxes, the use of a redundant configuration, and the ability to reset the radios via the flight computer, the risk of total failure due to radiation effects would be small enough to warrant using commercial-grade parts.

Goals

The first design goal was to provide for all of the radio services in a single unit rather than having frequency-specific radios. This would help minimize weight and total power consumption. If a single radio could be used, a secondary design goal would be for the flight radio subsystem to provide a software control of frequency settings and radio parameters that would be under the control of the flight computer that would be scheduling operations. The final design goal was to provide for a redundant design to allow for a graceful failure of the flight radio subsystem.

Design Solution

The design of the flight radio was based on an existing commercially-available product. The following paragraphs describe why the components were chosen and how the components were modified for flight.

Radio Choice

Based on the design constraints, the Kenwood TH-D7 transceiver was chosen as the basis for the 3CS flight radio. The following features were key to selecting this particular model:

a. The radio would operate with a 5 V supply voltage and consume approximately 1 A of current at the highest power mode
b. The radio has two lower power settings thereby allowing for power control options

c. The radio has a standard RS-232 interface for data and control
d. The radio has an integrated modem thereby eliminating the need for an external modem. The radio also provided internal support for packet communications modes that can be customized by commands from the flight computer.
e. The radio could be easily modified for the UHF and VHF services required. The radio had built-in support for the inter-satellite link.

An additional feature that was found to be useful was that the TH-D7 stores its settings to memory so that they are not lost when the radio is powered off. This implies that the flight software does not need to re-load settings each time. However, this would remain an option to help recover from single-event upsets.

Because the basic radio components were relatively light when removed from the commercial housing, we proceeded to design a system with two TH-D7 units to form a redundant flight radio subsystem. The necessary modifications are next described.

Necessary Modifications

Because the TH-D7 was intended for a commercial market, it has a number of components that would either be unnecessary in a flight radio (speaker and microphone) or not allowed (zinc alloy plate and various plastics). By using an iterative process, a procedure was developed to exactly modify the radio to first maintain functionality and second to eliminate all components that were not necessary for flight or had to be modified to pass materials compatibility. The main materials problem was with the zinc alloy chassis plate used in the radio. This was replaced by an equivalent aluminum plate of the same form factor. The procedure was codified into a step-by-step procedure to be used in preparing the actual flight radios.[5] Figure 2 illustrates an exploded view of the initial radio components and the ones finally kept in the flight units. The circuit boards were conformal coated and held together with staking compound and lacing cord as shown in Figure 3. The main functional modification to the radio was to wire it to always to be "on" so that it would be operational whenever power was applied.

During testing of the radio's performance, we discovered that the manufacturer-supplied dual-band antenna did not perform well at VHF frequencies. The performance was 10 dB below that of a tuned blade antenna for the VHF frequency. We replaced the stock dual-band antenna with a different commercial dual-band antenna that was only 5 dB below the tuned blade performance at VHF and within 1 dB of tuned blade performance at UHF.

Redundant Design

One of the design goals was to produce a redundant flight radio sub-system for the *3CS* satellites. The design was realized by using two TH-D7's in a primary and backup configuration. Each radio would individually receive power only when the power sub-system was commanded to do so by the flight computer. Each radio was individually addressable by the flight computer through its RS-232 data port. Each radio uses its own dual-band antenna (no antenna cross switching). A Basic Stamp microcontroller was added to the design to ensure proper radio power up. Through testing, we found that on occasion, the TH-D7 would not properly initialize when power was first applied. The microcontroller monitors the input line to determine when the radios are powered. If the microcontroller detects that power has been applied to the radio but the radio does not

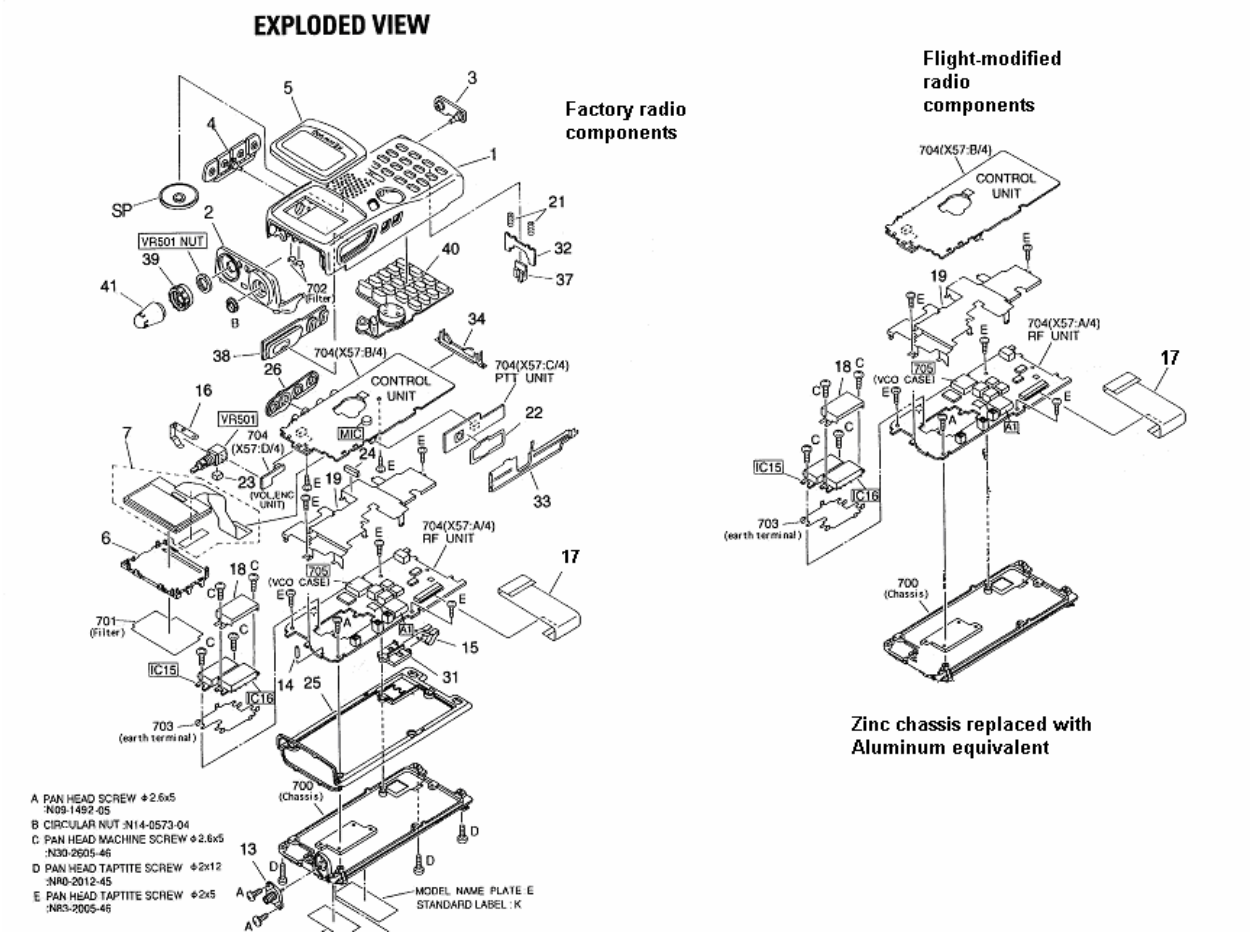

Figure 2 – Original TH-D7 components and the parts kept for the flight radio system

activate, then the microcontroller strobes the corresponding TH-D7 to emulate a user cycling the on/off switch. We have found that the radio will properly activate after this procedure. A separate circuit board was designed and fabricated for the microcontroller and added to the overall flight radio design.

Each subsystem in the *3CS* design is housed in its own aluminum box to provide low-level radiation shielding and to provide some radio frequency isolation and minimize interference between subsystems. The flight radio is no exception. The housing for the flight radio was designed to hold both TH-D7 radio circuit boards and the microcontroller circuit board. After assembly, the radio units were delivered to ASU for integration with the other satellite components.

The wiring diagram for the redundant configuration is illustrated in Figure 4 and one of the flight units being assembled with its aluminum housing is illustrated in Figure 5. A manual for the integrated design was produced to guide software developers and for operations training.[6]

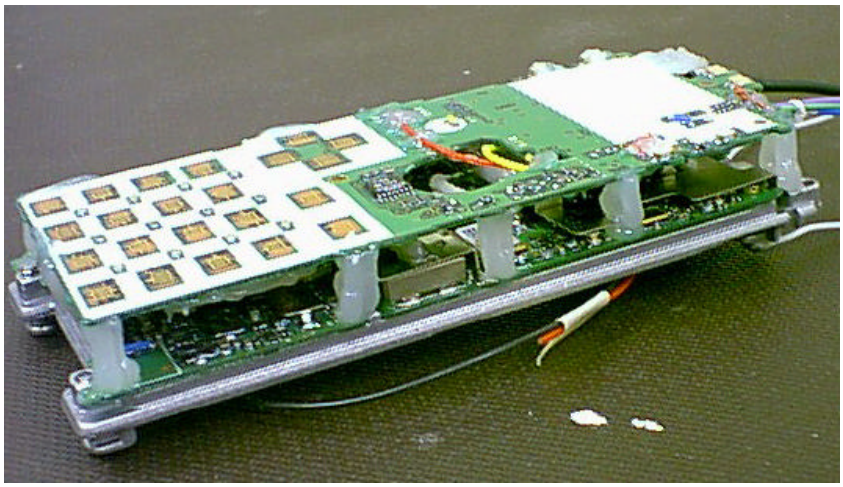

Figure 3 – Modified TH-D7 circuit boards that are conformal coated and use staking compound to separate the boards.

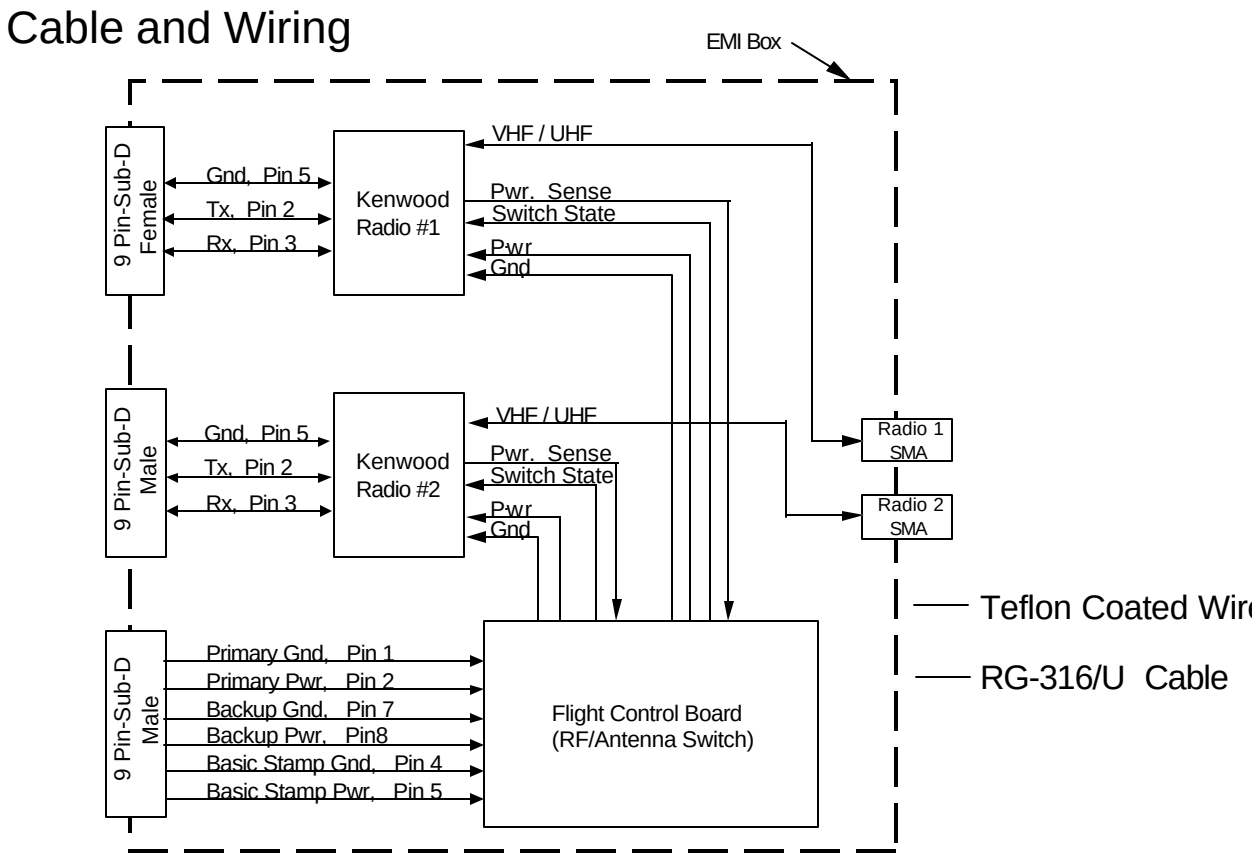

Figure 4 – Wiring diagram for the flight radio subsystem.

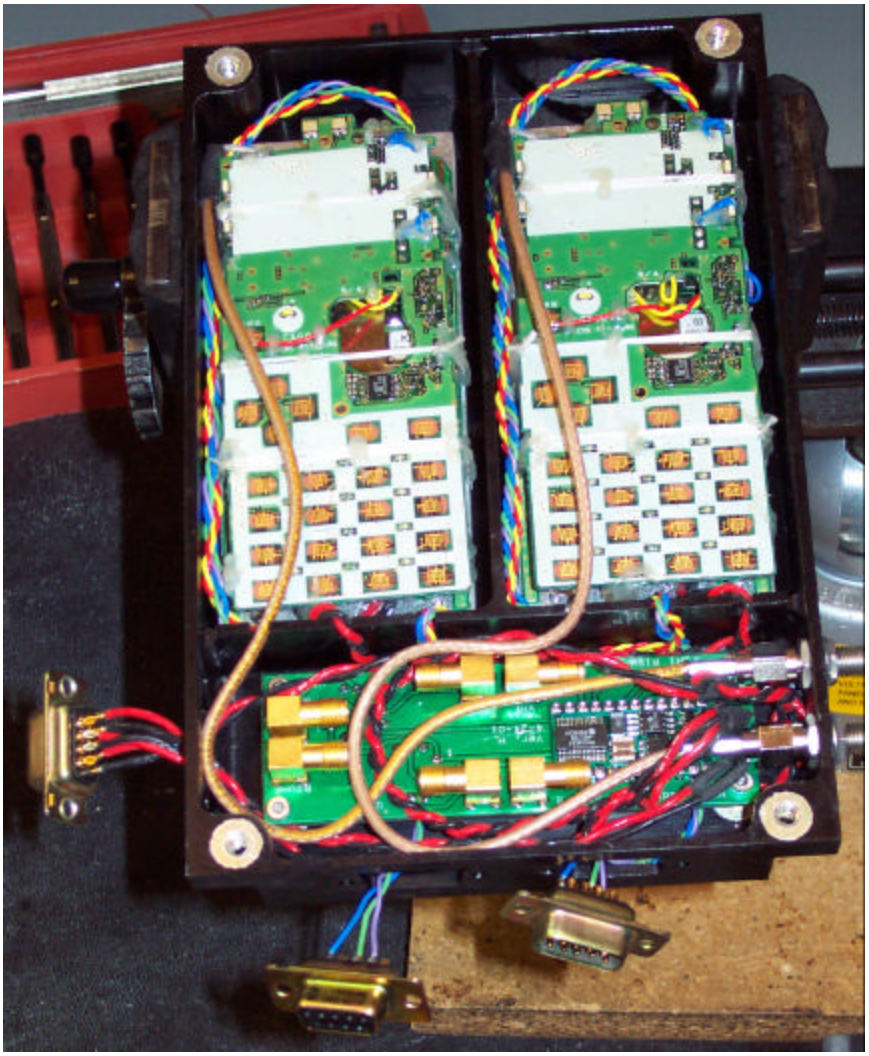

Figure 5 – Flight radio unit undergoing final assembly into aluminum housing.

Design Validation and Testing

To validate the design, an extensive test program was developed to ensure that no functionality was lost as the radios were modified, assembled into the flight units, and then delivered for integration into the satellite. The first step in the process was to start with the Manufacturer's Acceptance Test Plan where the required functions were tested, operational voltage and power confirmed, and radio transmission format and power were validated.[7] This test was derived from extensive experimenting with the radio's performance and developing automated scripts that would exercise the radio's set up and configuration. This test became the baseline for subsequent functional and characterization testing. The test sequence was also used to illustrate how the radios could be programmed for the software development team. After the electronics on each TH-D7 were modified, and before assembling into the flight unit, the individual unit was tested for proper

functionality. This test was then performed again after flight unit assembly. This test procedure could then be re-run after other testing to validate proper functionality.

To validate that the flight radio would pass acceptance testing, an engineering unit was produced and subjected to thermal cycle testing and vibration testing. The vibration testing was at full shuttle qualification levels. A visual inspection and a test for proper functionality were performed after the vibration testing to ensure that the units survived.

Finally, a link analysis was performed to ensure that link closure would be possible with the radio system.[8] While link closure is possible, it may not be possible to downlink an entire uncompressed image during a single pass to a single ground station. It may be required to have several ground stations receive the image segments and then re-integrate the image in software.

Lessons Learned

One goal of the *3CS* program is to educate and have cooperation between the students at all three universities. We believe that such a goal was very much a major part of the program so far. In this section we will examine some of the lessons learned from the process of developing the communications sub-system for the *3CS* program.

Distributed Project Environment

By the very nature of a university, the students will come and go on a project. Sometimes this happens every few months. With the *3CS* program, this was happening across three universities that are geographically separated as well. By using teleconferences and the Web, information can be shared on frequent basis and updated rapidly so that the distance between universities is not a big problem. One lesson from this distributed environment is that documentation such as users' manuals need to be developed as early in the process as possible. These help the team members at other locations to learn the design and see how the design will begin to integrate with other subsystems. This can also assist in software development. As the design process iterated and changes were made, the manuals could be updated and distributed over the Web in near real-time to keep all team members current.

Testing and Documentation

While testing is required to show that a part is functioning properly or to validate performance, it is also useful as a training method. As students cycled through the program, we used detailed testing procedures to teach them how the radio units worked and what type of performance to expect. A corollary to this is that spare test units need to be procured because the test units are often broken as new personnel learn the test procedures.

From our experience, most students are not taught formal testing procedures in their laboratory classes. Therefore, the formal testing of the radios introduces the students to formalized and methodical procedures. Prior to problems occurring, we have generally found the students' attitudes to be that formal procedures are not really necessary. After the problem occurs, they see that the formal procedure can assist the engineer in finding the fault and verifying that the problem resolution has worked.

We also used the detailed testing to capture design mistakes. In one case, it forced us to re-design the antenna interface and change some of the operational philosophy for the satellite. This was caught before the flight

radio units were delivered and integrated with the rest of the satellite.

Manufacturer Support

The manufacturer's distributor may be the least knowledgeable about the details of the components in the device. This is important both for materials and for operating characteristics. We encountered difficulties in determining the materials properties of certain components on the TH-D7. We eventually were able to track down the original manufacturer to obtain some of the information. It was necessary to conformal coat the component to ensure that it would pass NASA safety criteria. A similar problem was encountered with the intermediate frequency filter bandwidth specification for the radios that are required to complete the DD 1494 forms. In this case, the part needed to be located in the original manufacturer's catalog to obtain the specifications. The lesson learned for both cases is that the user will often need to reverse engineer a part to complete the paperwork necessary for flight. Adequate time needs to be placed in the schedule for these types of unanticipated activities.

Conclusions

A commercial-grade device can be readied for space flight and tested to pass basic safety and materials concerns. The usual engineering lessons of adequate documentation, well-specified procedures, and traceable performance become especially important when teaching students and when performing a distributed design. As might be expected, more time is actually spent on this type of paperwork activity than on actual design work. However, good documentation and good practices make the ability to work together across school boundaries an achievable goal.

Acknowledgments

This work was funded under grant F49620-99-1-0194 from the US Air Force Office of Sponsored Research, grant NAG5-9523 from NASA Goddard Space Flight Center, and additional NASA support via USRA.

References

1. Underhill, B., et al. "Three Corner Satellite Constellation – Arizona State University: Management; Electrical Power System; Structures, Mechanism, Thermal and Radiation; Attitude/Orbit Determination and Control; ASU Micropropulsion Experiment; and Integration," Proceedings of the 13th Annual AIAA/USU Conference on Small Satellites, SSC99-III-1, Logan, UT, August, 1999.
2. Hansen, E., et al. "Three Corner Sat Constellation: C&DH, Stereoscopic Imaging, and End-to-End Data System," Proceedings of the 13th Annual AIAA/USU Conference on Small Satellites, SSC99-IV-1, Logan, UT, August, 1999.
3. Horan, S., et al., "Three Corner Satellite Constellation – New Mexico State University: Communications, LEO Telecommunications Services, Intersatellite Communications, and Ground Stations and Network," Proceedings of the 13th Annual AIAA/USU Conference on Small Satellites, SSC99-VI-7, Logan, UT, August, 1999.
4. National Aeronautics and Space Administration, *Hitchhiker Customer Accommodations & Requirements Specifications*, 740-SPEC-008, Goddard Space Flight Center, 1999.
5. Horan, S., Alvarez, L., and Silva, A., "Assembly Procedure - Dual Transceiver,"

UN2-PLN-31114-417, Rev. a, Las Cruces, NM, 2001.
6. Horan, S., Alvarez, L., Anderson, B., Pachecho, R., and Jourdan, M., "Dual Transceiver User's Manual," UN2-MAN-31114-404, Rev.B, Las Cruces, NM, 2002.
7. Horan, S., Alvarez, L., Jourdan, M., and Silva, A., "Manufacturers' Acceptance Test Procedure," UN2-RPT-31114-423, Rev.a, Las Cruces, NM 2001.
8. Horan, S., "3 Corner Satellite Communications Link Estimates," UN2-RPT-31114-403, Rev.a, Las Cruces, NM, 2000.

Stephen Horan received an A.B. degree in Physics from Franklin and Marshall College in 1976, an M.S. degree in astronomy in 1979, the M.S.E.E degree in 1981, and the Ph.D. degree in electrical engineering in 1984 all from New Mexico State University.
From 1984 through 1986, he was a software engineer and systems engineer with Space Communications Company at the NASA White Sands Ground Terminal where he was involved with the software maintenance and specification for satellite command and telemetry systems, and operator interfaces. In 1986 he joined the faculty at New Mexico State University where he is presently a Professor and holder of the *Frank Carden Chair in Telemetering and Telecommunications* in the Klipsch School of Electrical and Computer Engineering. His research and teaching interests are in space communications and telemetry systems.
Dr. Horan is the author of *Introduction to PCM Telemetering Systems* published by CRC Press. He is also a Senior Member of both the IEEE and AIAA, and a member of Eta Kappa Nu.

Lawrence Alvarez received a B.S. in Engineering Technology in December 1989 from New Mexico State University. In 1990, he worked briefly with Shay/Blythe International designing and fabricating laser diode controllers and Faraday Anomalous Dispersion Optical Filters. In 1991, he started at New Mexico State University and assisted in creating the Laser Communications Lab where he helped develop deep space laser communication systems funded by the Jet Propulsion Lab. Since 1994, under funding from NASA, he joined the Space & Telemetry Center as a Systems Technician. Here he continues to assist in research for space and wireless communications. He is co-author on numerous conference presentations and technical reports.