SSC01-I-6

An EO Constellation based on the TopSat Microsatellite: Global Daily Revisit at 2.5 metres

Alex Wicks, Susan Jason, Jenny Harrison
Surrey Space Centre
Surrey Satellite Technology Limited

Abstract: TopSat is an unclassified collaborative mission between DERA, SSTL, RAL and InfoTerra, funded by the UK MoD and the British National Space Centre Mosaic Programme. The mission will demonstrate provision of rapid response 2.5 m ground sampled imagery to fixed and mobile ground targets using a low cost SSTL microsatellite. The platform provides accurate target selection via agile off-pointing from nadir by ± 30°. On-board computers, GPS and sophisticated attitude and data handling systems enable safe semi-autonomous operations. End users for this mission range from the UN and environment agencies to mining companies, farm consultants and town planners.

Continuing the theme of all SSTL Next Generation Constellations, this mission could effectively enhance the infrastructure of the Disaster Monitoring Constellation, currently under construction at Surrey and due for launch in 2003. This may be implemented either singly, or in constellations, via a 'plug and play' constellation approach. The total contract cost for the mission is 13.5 million GBP, which includes R&D. Therefore, repeat-build TopSat units make a constellation of such satellites economically feasible, enabling high resolution imaging at high temporal frequency. This would be of particular benefit for crisis management activities, among others.

The paper describes the TopSat microsatellite mission and assesses the feasibility of a constellation of these platforms to offer global daily revisit at 2.5 metre ground sample distance.

Introduction

TopSat is an Earth observation mission, which will provide panchromatic 2.5 m ground sampling distance (GSD) images from a microsatellite to mobile ground stations capable of on-site processing. As a demonstration mission it has a required lifetime of 1 year and required to be only single string. The primary aim is to resolve and demonstrate the many of the challenging aspects within the programme required for a rapid response 1 m GSD imaging mission. Beyond this goal, TopSat will be providing a host of other services to the national and international organisations and users.

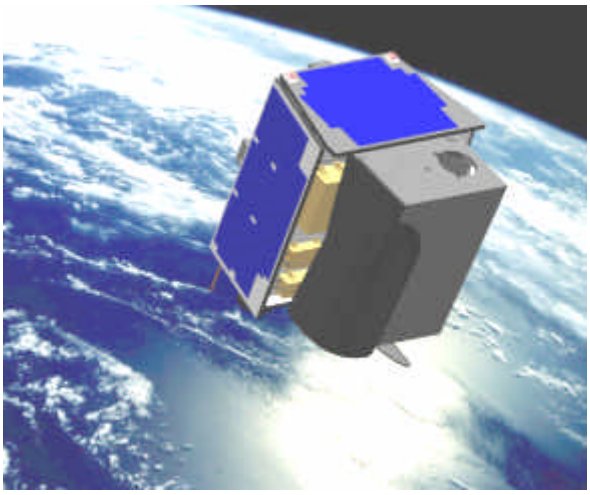

Artists impression of TopSat in space

The programme is funded by the UK Ministry of Defence (MoD) and the British National Space Centre (BNSC) who have selected a UK partnership to carry out the programme. The team consists of: DERA, who are responsible for managing the programme, payload data handling, payload data ground stations and scheduling operations; SSTL, who are responsible for the platform, launch services and TTC operations and ground segment; RAL, who are responsible for the camera and control electronics; InfoTerra responsible marketing TopSat products.

This paper will give an overview of the mission and spacecraft. In particular the platform is discussed in more detail. Following, commercial spin-offs using the same platform are discussed.

Camera

The camera is a new development, undertaken by RAL, for the TopSat programme. The camera is an off-axis, reflective design, using three mirrors to provide a folded 1.68 m focal length. The sensor used is a 6000 pixel linear array device from Kodak. End-to-end the MTF should be 15% in the Nyquist frequency.

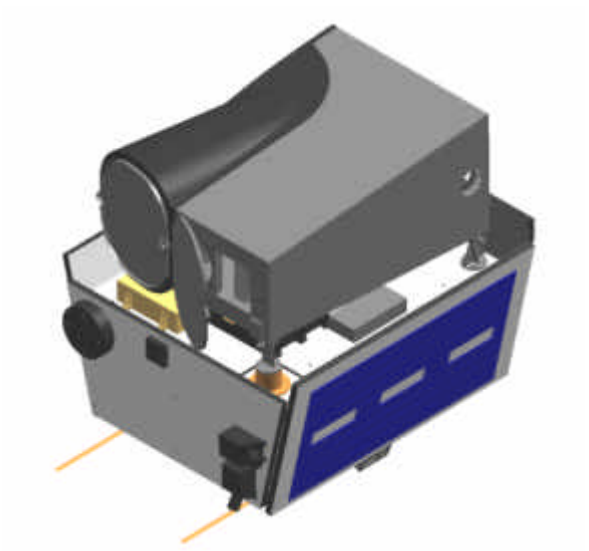

Camera mounted on platform

The camera has been designed with the low-cost philosophy applying to the mission as a whole. For this reason, TDI and off-pointing manoeuvres are performed by the spacecraft rather than by using moving parts within the optics themselves. This helps reduce the complexity of an already challenging instrument and passes it the platform, which only needs small modifications to perform the task. Some capability is lost this way, but the advantage is recouped when applied across multiple spacecraft – as rebuilds become commercially viable.

The camera casing is a built as a monocoque honeycomb CFRP structure, to provide a rigid structure capable of maintaining mirror alignment during in-orbit thermal cycling. The case stands on Aluminium blade flexures designed to reduce the effects of the different thermal expansions seen between the payload mounting panel and the camera itself. Even small effects can have serious consequences on the mirror alignment and therefore the quality of the image. A lightweight baffle is also incorporated. During launch and early operations, the aperture is protected using a 'one-shot' cover. The actuator is a wax-filled pin puller.

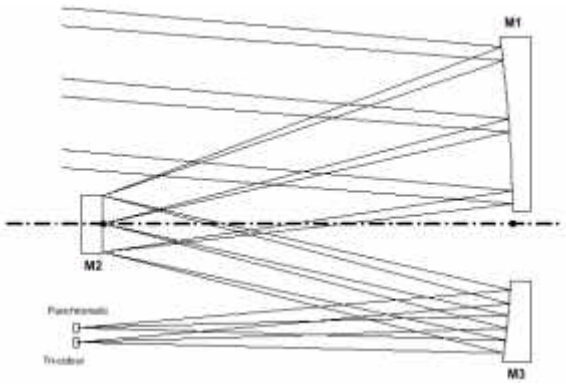

Camera optics design

Internal to the case are housed the three mirrors, a series of baffles and the focal plane electronics. The primary mirror is supported by an invar ring. The secondary and tertiary mirrors are on adjustable mounts

to allow for focusing of the system. Internal baffles help prevent unwanted light paths occurring and introducing noise to the sensors.

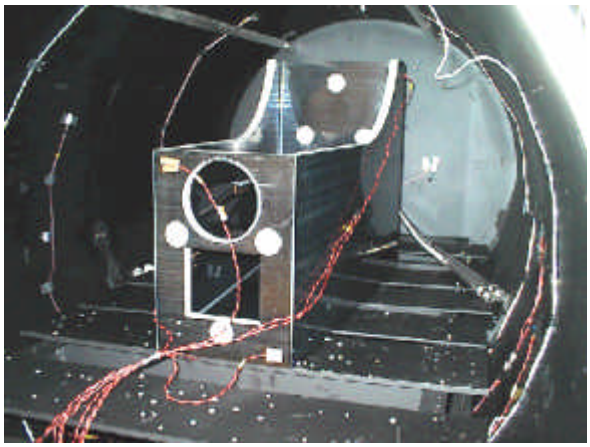

Camera during structure bake-out and test

Despite the rigid design of the camera, it is still sensitive to thermal effects. The camera will be aligned under a set temperature, e.g. 15°, and should operate within specification ±5° from this baseline. To this end the camera's temperature will be likely be controlled using multi layer thermal insulation (MLI) and heaters.

Payload Data Handling and Link

DERA are providing the payload data handling unit (DHU) and X-band downlink.

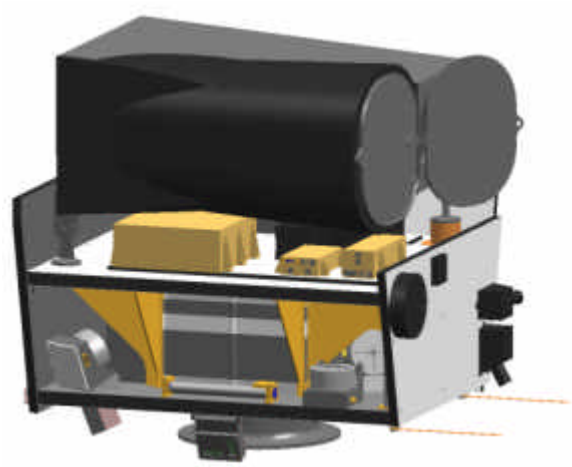

Payload camera and modules

The data handling unit will be the main power and data interface between the payload and the platform. The image data received from the camera can be processed and stored within the DHU for subsequent downloading via the X-band link. The DHU will also store attitude data passed on from the primary on-board computer to enable processing of the images.

The data is downloaded via a 10 Mbps X-band data link. This link is used solely for transfer of payload data. Coupled with the X-band downlink is an S-band beacon. The beacon facilitates acquisition of the X-band signal, allowing for a simpler ground station and coarse orbit data to be used.

Platform

The design of the advanced imager has had a strong impact on the design of the platform itself, thus TopSat incorporates some significant differences to other SSTL modular microsatellites[1]. The size and mass of the payload, as well requirements for structural and thermal stability have had a very visible impact on the design - notable are the canted panels and external accommodation of the payload. Many changes lie deeper in the design, such as an advanced attitude determination and control system capable of accurate pointing, agile manoeuvring and TDI. Other changes stem not just from the payload, but from advances in SSTL capability which see COTS equipment originally demonstrated on 6 kg nanosatellites and 350 kg minisatellites successfully and advantageously applied on Topsat, a 110 kg microsatellite.

Structure

The structural design has undergone the most changes, when compared with the well known SSTL modular microsatellites. This is particularly notable when viewing the assembled models, although below the surface lie some very familiar concepts and design methods.

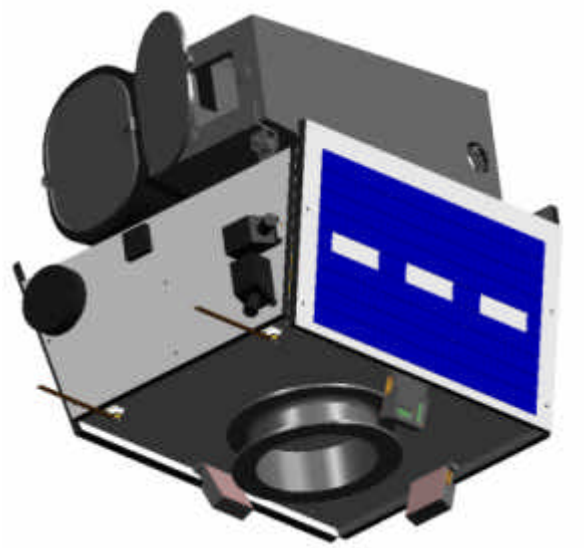

External structure: underside

The structure is largely made from aluminium, in the form of machined parts and honeycomb panels. The interior features a stack of microtrays, which form the load bearing structure, and some supporting panels added to give the payload panel stability. Three self-supporting solar panels are mounted on the exterior.

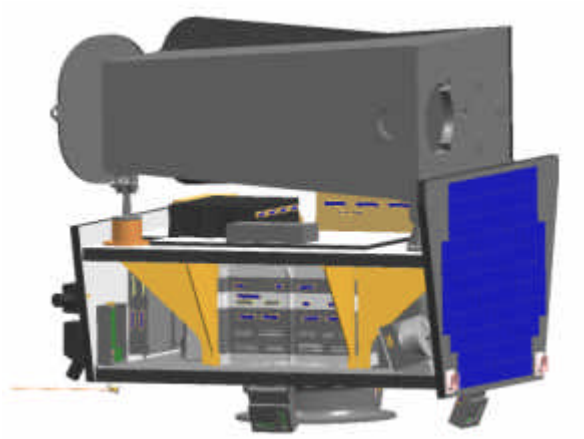

Internal structure

One of the key elements to the mission's success is the structural design, which must ensure as soft a ride as possible for the payload during launch and also offer structural stability to the camera when in orbit. The smallest changes in the camera support structure can cause significant degradation in image quality due to the small angle geometry in high-resolution cameras. The module trays have been strengthened to provide good support to the payload. Many items, such as the VHF receivers, battery, fibre optics gyro and Earth horizon sensor electrical interfaces, are housed in alternative packages to allow them to be taken out of the stack and maintain a low spacecraft profile. Added structural stability is incorporated into the design by vertical support panels. This will ensure that during launch and in-orbit the payload panel sees a low level of distortions.

Virtually the entire payload sits on the payload panel, easing design and AIT tasks which are carried out by the various members of the partnership. Housing the payload internally would have added to the mass and volume of the platform, reducing launch opportunities and increase launch costs. Additionally, this flexible payload accommodation has allowed for changes in the payload interface to be accommodated with little effort.

ADCS and Navigation

Attitude determination and control is another complex element key to the mission's success. The precision in knowledge and control required for TDI and such high resolution imagery mean that TopSat will feature one of the most advanced attitude determination and control systems (ADCS) seen on microsatellites. SSTL is collaborating with Analyticon to provide such a system.

In terms of target acquisition the following two requirements a have been applied: Firstly, the spacecraft will be capable of pointing to within ±5 km (99%), in order to be assured of capturing 10 km x 10 km target area within a 15 km x 15 km area image. Secondly, TopSat shall be capable of off-pointing by up to 30° to increase target availability and revisit rates.

Imaging target requests for up to three days can be supported. On-board processing, using data accurate to within 30 m from the GPS module, is used to ensure that the spacecraft can autonomously determine the precise time to image to the high degree of accuracy, even days ahead.

The platform is capable of supporting time delay integration (TDI), an attitude mode where the spacecraft manoeuvres to allow the camera to 'look' at its target for a longer period of time – equivalent to increasing the exposure time on a camera. TDI aids in increasing the sensitivity of the image. During normal pushbroom imaging the camera always faces nadir and to forward motion of the spacecraft in orbit provides the scanning effect. During TDI the pitch of the spacecraft is manipulated such that it stares at the target for a longer period. At the beginning of the image, the camera is facing forward, toward the target, and by the end it is facing backwards, still toward the target.

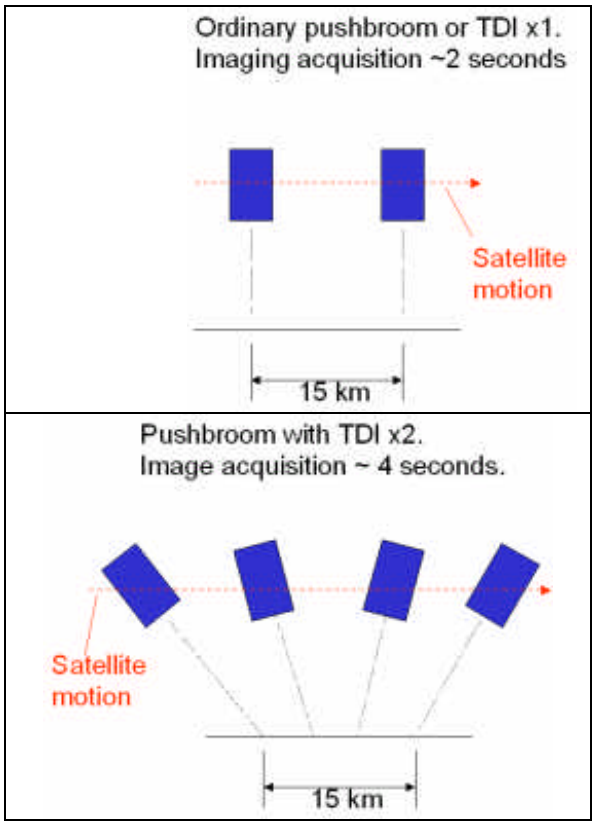

TopSat will be capable of x8 TDI, thus the camera will be oriented to face the target for 8 times longer than an ordinary pushbroom mode. Typically, it will operate using x2 to x4 TDI. In order to achieve this the spacecraft pitch rate will be controlled to within 0.0025°/s (1 σ).

High and low frequency disturbances can both affect the quality of the image, and hence determine its usefulness in understanding objects within the image. Jitter has been reduced on the spacecraft through the development of low noise wheels. TopSat features four of these wheels in a tetrahedral configuration. The gyro, which is used during imaging manoeuvres and imaging itself, provides accurate, high frequency updates of the spacecraft attitude. This data is used on-board by the ADCS and can also be used on the ground to reconstruct the image. For this reason gyro data is fed to the payload for each image taken and downloaded as part of the payload data. This allows the mobile ground station to perform advanced processing function on the data and retrieve a high level of detail from the image.

The ADCS also features a back-up processor. The back-up becomes effective should the on-board computer crash or fail for any other reason. When this is the case, a safe mode can be run, as well as some basic safety tasks, to ensure the spacecraft is maintained in an optimal safe mode and the camera is not likely not see the Sun. It is not yet known whether the camera can face the Sun, as tests are on-going, however this precaution has been applied to cover eventualities.

RF Communications

The RF system used for TTC in the VHF/UHF bands and owes much of its heritage to the previous SSTL microsatellites. The UHF is an off-the-shelf UoSAT-12 3W FSK module. The UHF transmitter supports only low data rates required for telemetry functions. However in

the event of a payload transmitter failure, the UHF link may be used to transmit thumbnails or compressed images, allowing TopSat to provide a degraded but continued service. The VHF receivers are nanotray modules which are evolved, repackaged versions of the microsatellite module that were used on SNAP-1 nanosatellite.

The antenna system has been designed to provide near omni-directional coverage so that communications to and from the spacecraft may take place during tumbling or non-nominal attitude modes. As the spacecraft is larger than, and a different shape to, previous microsatellites, verification of the antenna design was required. A 1/6 scale model was built and tested using S-band RF signals. The higher frequency was used to ensure scaling between the models physical properties and the wavelength remained constant. These tests were carried out on site, see model below. Results have confirmed a good level of coverage for both the UHF and VHF links by using two monopoles.

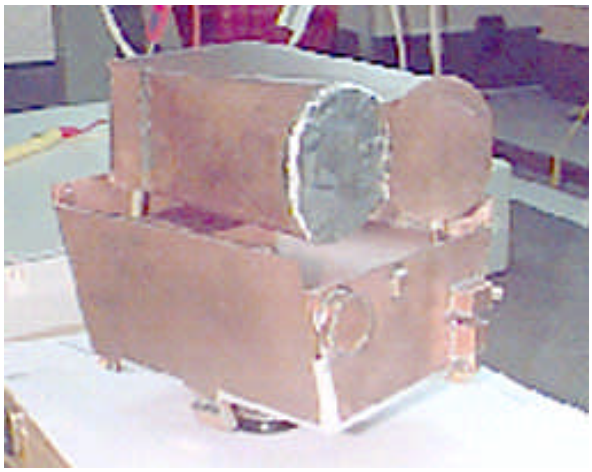

TopSat 1/6 RF model

Power system

The power system is based on the battery bus, maximum power point tracking topology. This is used on all of the previous SSTL missions and is particularly suited for low Earth orbit (LEO)[2]. The power conditioning unit is dual redundant, using a technology mix. One unit is based on the microsatellite version, the second uses a SNAP-1 version which has advanced features adding to mission capability.

The cells used are commercial cells, which will undergo a screening process. This approach has been used on numerous missions with success and SSTL has developed an ESA approved screening process. The actual cells used are SANYO-Cadnica N-series rather than KR-series used on many previous missions, which are more rugged and should have longer lifetime at the sacrifice of a small percentage capacity. The battery is comprised of 20 4 Ah cells.

The solar cells have been acquired from EEV, along with their cell integration capability, since the company stopped its activities in this area. SSTL is now making use of this capability on a number of missions, including FedSat[3] and externally made spacecraft. Because of the limited availability of cells, TopSat will feature a curious mix of cells: 20 x 40 GaAs/GaAs; 20 x 40 GaAs/Ge; 40 x 40 GaAs/Ge. Each of the three panels uses one of these cell types to produce 50 to 60 W peak power. In its nominal orbit, the orbit average power will be 42 W and peak power 80 W.

OBC

The on-board computer is an OBC 386, a repeat build of the on-board computer (OBC) used on UoSAT-12. The computer is responsible for TTC tasks as well as running ADCS software and in exceptional cases storing small amounts of EO data for UHF downlink. The OBC will store commands for the payload and pass them on prior to imaging via the CAN.

A dual redundant CAN network is used is the primary information exchange mechanism. Most modules are equipped with an off-the-shelf CAN node. These can relay telemetry and receive telecommands either from the OBC or directly from the TTC receivers and transmitters.

Thermal

The platform thermal design is passive, and makes use of the structural design, thermal surface, MLI and in the case of the camera heaters.

As with the structure, the thermal design performance can have notable implications on the quality of imagery taken. The camera is sensitive to absolute temperature and warping of its mounting plane through thermal distortions. Thus the spacecraft thermal design must ensure that during imaging the camera is at the temperature its mirrors were aligned. Also the camera support panel should be at a similar temperature and free of any 'hotspots' which may warp the surface.

Because of this requirement, the payload items sit on a second panel, which sits on the camera panel. This panel acts as a buffer, slowing down the distribution of heat to the payload panels and increasing the area over which this heat is distributed.

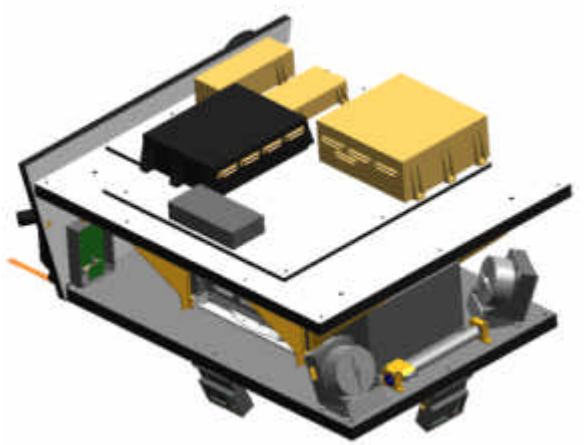

Payload modules on second panel

TTC ground segment

DERA will generate operational tasks, which will be forwarded to the Surrey Space Centre (SSC) where the operations centre is located. The TTC link is responsible for the typical platform housekeeping tasks as well as for payload commanding and telemetry retrieval. Data transfer will takes place via ftp and the internet, using agreed file formats in order to enable as much automation as possible.

Payload ground segment

The payload will typically communicate either to the DERA West Freugh ground station or a RAPIDS mobile ground station at an arbitrary location.

DERA has developed the ground station based on the RAPIDS mobile system. The ground station is now a self supporting system, hauled by a Land Rover defender and capable of being set-up in a very short time. The use of the S-band beacon means only very coarse alignment is required to enable acquisition and tracking of spacecraft. The antenna itself is a 2.7 m parabolic design and can be driven, along with the other electronics by the portable power generator.

Imaging opportunities may be assessed using the 'User Tool' currently under development. These will be forwarded on to the Mission Control Centre at SSC for confirmation (subject to spacecraft status etc.) and uplinking via the TTC system.

Received data, which includes actual imagery and attitude knowledge, can be processed in the ground station itself. Using the mobile ground station, users can obtain near real-time well processed 2.5 m imagery almost anywhere in the world.

Commercial mission

TopSat is a demonstration mission, and as such, much of its potential has not been tapped into – to do so would be outside the scope of the mission and result in increased costs.

For a commercial mission the spacecraft's performance could readily be improved or tailored to suit a particular role. Some of the technical changes that could be implemented on a TopSat based mission are listed below.

Resolution – At the nominal 600 km orbit altitude the camera GSD is 2.5 m. By lowering the orbit this can be decreased to provide higher resolution. Making use of higher TDI (up to x8) the spacecraft can offer lower GSD combined with good sensitivity in lower orbits.

FOV – the camera currently only uses a 6000-pixel sensor. It has been designed to support a 12000-pixel sensor to provide a much larger swath. At 600 km, this equates to a 30 km swath width.

MS sensors – typically multispectral (MS) operate at a lower resolution than PAN sensors when sharing optics. Thus the camera would be able to support 5 m GSD imagery. This remains an option for the TopSat itself as well as any others based on it.

Data Storage – Currently the system stores 4 images. A larger memory would support increased data generation, for example for wide area mapping applications.

Higher data rate – Increasing the data rate from 10 Mbps would support the increased data transfer requirement.

Increased power – increased power would be required to support some of the changes mentioned in this paper.

Redundancy – TopSat is design as a single string mission, with redundancy wherever possible. Redundancy can provide increased reliability and lifetime expectancy.

Increased agility – would directly add capability to real time operations. More capable reaction wheels or control moment gyros, to provide slew rates of at least several degrees per second, cut the slewing time between pointing at multiple targets and ground stations, thus increasing the number targets captured as well as the potential target area. Thus low-noise, high torque wheels could significantly enhance such a real time mission.

These modifications to the existing mission can be combined to suit specific applications. For example, a national mapping mission may require wider swath, multispectral sensors, higher data rates and higher X-band downlink or multiple mobile ground stations instead. A military mission would benefit from higher resolution, as well as increased agility and a higher downlink data rate to aid in real time operations.

Constellation

The Topsat spacecraft has been designed as a demonstrator for a constellation mission. This makes it an ideal starting point for a constellation.

The platform is extremely versatile, using low cost technology to enable a development of a cost-effective constellation.

Four spacecraft at 600 km can provide worldwide daily coverage, excluding the polar extremes, using 30º off-pointing capability.

TopSat already includes a GPS module for navigation, capable of positional knowledge within 30 m and orbit prediction within 200 m accuracy over a day. Also, autonomous orbit maintenance has been demonstrated by both Microcosm and SSTL[4] using alternative methods on UoSAT-12 minisatellite. This can be used in conjunction with a propulsion system for stationkeeping, in order to guarantee revisit rates and timeliness of data reception.

SSTL will be demonstrating constellation maintenance with the Disaster Monitoring Constellation (DMC)[5].

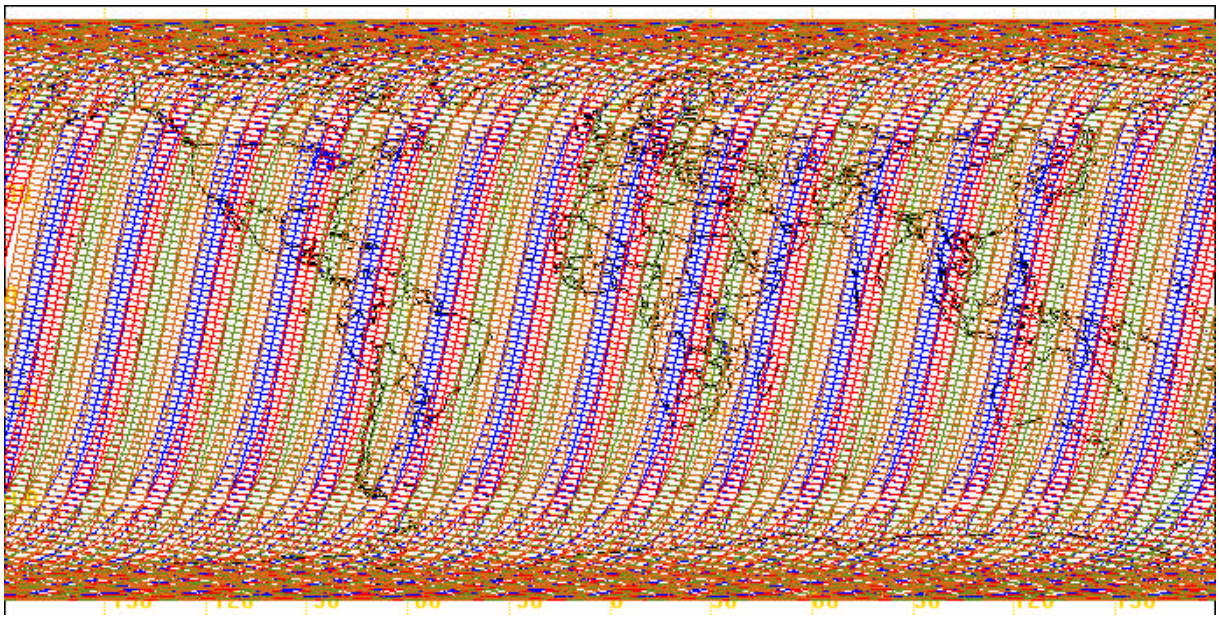

Daily coverage provided by four spacecraft at 600 km with 30° off-pointing capability. Each colour track (blue, red, green, brown) represents one of the spacecraft.

Conclusion

The TopSat programme will demonstrate high-resolution imagery can be obtained in a reliable and timely manner with a low cost system. The mission hardware includes a 110 kg microsatellite, an advanced imager and mobile ground stations all built within the UK. The platform makes good use modules which are as applicable for nanosatellites as they are for minisatellites and larger spacecraft. These are interchangeable and can be replaced to meet user-defined needs.

By avoiding over complex designs, a cap can be placed on the costs of the mission. The spacecraft is suitable as an affordable Earth observation mission, giving the user an opportunity for a customised EO system with own shutter control. Additionally, it is inherently suitable for constellation use as the repeat build costs are low. Benefits lost from not using over-complex technology are outweighed by the fact that multiple spacecraft are readily affordable.

Launch is baselined for two and a half years' time, early 2004.

1. Prof. Martin Sweeting "25 Years of Space At Surrey - Pioneering Modern Microsatellite" Proceeding of the 49th International Astronautical Congress, Melbourne, Australia, Sept. 1998

2. Van Der Zel V., Blewett M.J., Clark C.S., Hamill D.C. "Three Generations of DC Power Systems for Experimental Small Satellites" Proceeding of the Applied Power Electronics Conference, San Jose, CA, USA, March 1996

3. A. James Barrington Brown, Stephen J. Gardner, Alex Wicks, Lee Boland, E. C. Graham "The FedSat Spacecraft Design" Proceeding of the 14th International Astronautical Congress, Sept. 1998

4. Manop Aorpimai, Yoshi Hasida , Phil Palmer "Autonomous control system for precise orbit maintenance" Proceedings of the 14th AIAA/USU Conference on Small Satellites, Aug. 2000

5. Dr. Jeff Ward, Susan Jason, Prof. Martin Sweeting "Microsatellite Constellation for Disaster Monitoring" Proceeding of the 13th AIAA/USU Conference on Small Satellites, Aug. 1999