The Little Probe That Could!
(A Story of Mission Impossible Engineering)
or
How to Design, Build, and Deploy Small Spacecraft In Four Months

T. Adams
toma@design-group.com

D. Downs
ddowns@design-group.com

G. Murphy
murphy@design-group.com

K. Neal
kerrylneal@earthlink.net

Design_Net Engineering, 605 Parfet St., Suite 120, Lakewood, CO 80215 Tel: (303) 462-0096

Abstract. Starting with the Space Shuttle flight 4A (Nov. 30, 2000), the International Space Station (ISS) power system employs large, high voltage, solar arrays with the negative ground tied to chassis. An intense study by a NASA sponsored Tiger Team in the early '90s determined that this configuration leads to the structure being at a high negative potential relative to the local plasma (approximately 140v negative without any intervention) and, that at any potential greater than around 70v negative, the anodized aluminum structure and its components will undergo destructive arcing. A set of plasma contactor units (PCUs) was deployed to provide a conductive xenon plasma path for remitting electrons collected by the arrays and thus bring the potential closer to zero and mitigate the arcing danger. In late July 2000, the ISS program office at JSC issued an engineering change notice that directed the development of some means to independently assess the performance of the PCU's, and to have hardware available for launch on STS-97 (ISS Flight 4A) the very mission scheduled to deliver and install the first set of large Station solar arrays on November 30th. This allowed only a mere 4.5 months to design, build, test, manifest, complete EVA training, and deliver for launch. NASA Glenn, NASA Johnson, and Design_Net Engineering formed a unique team to try to accomplish the directive. The subject of this paper is to describe the Floating Potential Probe (FPP) and the fast-track program approach used to quickly develop this autonomous system for measuring the electrical potential between the ISS and the surrounding space plasma. At the time, most people involved with the Floating Potential Probe (FPP) project believed that there was less than a 10% chance of successfully making it onboard Flight 4A and even less chance that it would work.

Introduction

With it's solar arrays, secondary batteries, control/data processor unit, RF command/data link, thermal protection system, and two science instruments, the FPP displays most of the characteristics of a small spacecraft. It was made to be autonomous because in the 4 months available for design, fabrication, and test, it would not have been possible to

interface with either the ISS power system or its data system directly. The FPP Electrical Power Subsystem (EPS) consists of two small solar panels, a dual-string primary power converter, a dual NiMH battery, and a single-string secondary power converter. Additionally, the FPP Embedded Controller Card (ECC) plays an important role in the battery charge management. Various electrical parameters are monitored by the ECC, which subsequently commands the primary power converter to provide the appropriate output current. High efficiency was emphasized throughout the design because of the anticipated low power margin. The FPP was attached to the top of the P6 Truss during one of several Flight 4A EVAs. It uses an RF link to communicate with an antenna (deployed at the same time as the probe) which feeds though the module and into a transmitter/receiver and portable computer inside the habitable volume. Real time data on the ISS potential is displayed on the laptop and down linked through the ISS server when requested. The FPP has two science instruments; a Langmuir Probe and a Floating Potential Probe, an autonomous power system, a data system for control and data acquisition, and a telemetry system derived from the Shuttle Wireless Instrumentation System (SWIS).

This paper will describe key elements of the innovative FPP design which had to be developed from scratch and will also focus on the fast-track program approach used to quickly develop the FPP. Producing Vehicle Grade Hardware for ISS was not something that anyone really believed could be done in 4 months and it certainly was not easy. It was accomplished by management and system techniques shared by the authors which have broad implication for success of many other small, fast-track missions.

Fast Track Project Management & Design Approach

The extremely compressed schedule for the development of the FPP system demanded unconventional approaches for both the management of the project and the design of the system. It was apparent from the start that the only conceivable way to get the job done in the four months available before launch was to establish a partnering relationship between the contractor, Design_Net Engineering, and the customer, NASA Glenn Research Center (GRC), and to base the design on the use of readily available flight heritage components.

The first step was to quickly and succinctly identify the division of roles and responsibilities and to commit to them. In the case of the FPP, NASA agreed to provide much of the extant flight proven hardware, to provide environmental test facilities with support personnel and to take on the non trivial responsibilities of safety conformance and parts selection/approval, all of course with Design_Net support. GRC and the Johnson Space Center (JSC) would also jointly provide on-orbit solar array insolation analyses and Shuttle/ISS crew deployment and operations procedures. JSC would also take complete responsibility for the RF transmitter/receiver system located within ISS Node 1. Design_ Net was to design and assemble the FPP remote unit. Critical components provided by Design_Net included the EPS, the control/data processor unit and associated software, all interconnecting cabling, the central support structure, the assembled Solar Array Panels, and the thermal protection system. Once all parties reached agreement on this program structure, GRC issued a fixed price sole source contract with Design_Net Engineering to immediately begin development of the FPP remote unit.

The second step was to assemble a highly skilled and seasoned design team. As it's name implies Design_Net was originally conceived as a loosely organized network of experienced contract engineers that could be called upon as needed by discipline to solve difficult engineering problems. Most of the engineers forming the network had worked together on previous challenging projects helping Design_Net to establish a history of success. It was no accident that the FPP design team would comprise many of these same individuals.

Finally it was necessary to baseline a simple, yet robust design that could take advantage of readily available flight proven hardware where ever possible. This approach reduces the need for costly and time consuming design, fabrication, qualification and safety conformance exercises. Examples of the use of such hardware for critical components of the FPP are:

1. The Central Processing Unit (CPU), which had flown previously on an Air Force Mighty Sat mission, was provided by Aeroflex/UTMC under the direction of GRC.
2. The science instrumentation electronics and hardware salvaged from the 1994, Space Shuttle borne, Solar Array Module Plasma Interactions Experiment (SAMPIE) mission. This included the Signal Conditioning Unit (SCU) and the V-Body and Langmuir Probe spheres, as well as some assorted cabling.
3. The EVA Helmet Interchangeable Portable (EHIP) battery pack regularly used as the astronaut helmet illumination system power supply was provided pre-qualified by JSC.
4. The Solar Array Cells, originally used as performance test articles on Space Station Freedom and virtually identical to those now deployed on ISS.
5. The RF command and data telemetry system. A complete suite of the Shuttle Wireless Instrumentation System (SWIS) which had flown a number of times on the Space Shuttle was modified and provided by INVOCON under the direction of JSC. This suite comprises a Remote Sending Unit (RSU), a Network Control Unit (NCU), and the associated antennae and cables.
6. The FPP support stanchion was constructed using a number of ISS and EVA qualified parts. This attachment support system was designed, built and provided in it's entirety by the Boeing Co. also under the direction of JSC .
7. The Solar Array Panel and Instrument Probe EVA carrying case (fondly refered to by the Shuttle crew as "the Pizza Box") was also designed, constructed, and provided by the Boeing Co. using flight proven materials under the direction of JSC

Even though much of this hardware would require some minor rework for use on the FPP, the fact that it was readily available at 90% reusability more than offset any time spent on modification and proved essential to our success.

Another key factor driving the design was the desire to simplify any interfaces with the Space Station. Several factors regarding the ISS interface lead to the decision to make the FPP remote unit completely autonomous with respect to power and communications. ISS external power and signal connections are precious few and none were available in the locations determined to be suitable for good FPP performance. Critical performance criteria for probe location include, access to RAM plasma, good insolation, and placement at a discrete distance from the PCU's. It was also required to accommodate future relocation during the course of the stations assembly and configuration evolution. In the

end, the only interface between the FPP remote unit and the ISS was the actual physical attachment point.

Since the FPP was to be deployed and partially assembled external to the ISS via astronaut EVA it was critical to obtain continuous astronaut input during the design process. Several iterations of designs and rapid prototyping of candidate EVA assembly mechanism solutions were provided to the Shuttle mission specialists for their feedback. Their invaluable input assured a successful design and subsequent flawless on orbit deployment.

The greatest engineering challenging facing the design team was to take all of the existing disassociated flight heritage hardware and integrate it into a cohesive functioning system. This required the development of a central support structure, S/A and probe support struts, electrical power system, thermal blankets, and last but certainly not least, control software. The following sections describe these key components that had to be designed, fabricated, and flight qualified from scratch.

Central Structure & Thermal Blanket Design

A flexible design for the FPP mechanical structure was conceived that would allow for a number of possible configurations of probe and solar array assemblages. This was necessary since it was unclear during the early phase of the project exactly where on the ISS the FPP would ultimately be located. This meant that the exact orientation of the science probes and solar array panels would not be known until possibly quite late into the design process. The resulting novel central structure or "crate" design allowed for the fabrication of all major components to proceed in parallel up to the last minute before the final orientation of probes and S/A's needed to be specified. As it turned out the mounting receptacles locations didn't get solidified until about one week prior to delivery to GRC for environmental testing. It was as that point that the solar array and probe mounting receptacles were permanently affixed at the designated locations. The design was also constrained initially by the fact that all the components were expected to fit into a Shuttle mid-deck locker (a volume of roughly 9.7" x 17.3" x 20.3") where they were slated to ride during launch. The Shuttle Locker ICD also provided the limiting mass constraint of 60 lbs. Figure 1 illustrates the major mechanical components of the FPP and overall dimensions. The mid-deck locker constraints eventually disappeared after the FPP was moved to a soft stowage bag instead.

The hexagon shaped central crate is fabricated from 3/8" thick machined Al 6061. The many isogrid like cutouts provide numerous cable penetrations for attaching solar array struts, instrument probes, and antenna. They also serve to decrease mass. A photograph of the central crate is provided in Figure 2. Figure 3 provides a cut-away view of the crate showing the layout of internal components.

The solar array and probe struts share an EVA assembly system that incorporates two levels of latch mechanisms. The soft dock latch is designed for one-handed operation to capture the strut and hold it in place allowing the astronaut to use both hands to engage the hard latch which then pulls the strut into the respective socket and provides a preload to secure it in place. Guide pins within the receptacles insure that proper alignment is maintained for mating connectors during the latching sequence. The soft latch mechanism uses a simple, low-force, spring loaded hand paddle with an integrally machined latch bolt that is captured in a machined dimple located on the outside surface of the receptacle. The

hard latch mechanism is similar to a ski boot buckle (draw latch) with a spring steel clasp that hooks over a steel pin. The clasp is held open by a small spring to prevent it from inadvertently sliding underneath the capture pin. The thumb button on the end of the hard latch handle must be depressed during the latching process to force the clasp to properly engage the capture pin. During the unlatch operation (disassembly) the small spring force automatically acts to disengage the clasp as the handle is rotated. The thumb button is not depressed during the unlatch process. Figure 4 illustrates the two latch mechanisms. The struts also feature EVA tether loops.

The thermal blanket consisted of 14 layer MLI with the outermost and innermost layers consisting of ITO coated 2.0 mil gold Kapton. The ITO coating protects the Kapton from the effects of atomic oxygen and because of it's surface electrical conductivity also prevents electrostatic charge buildup. The inner layers consist of alternating layers of 0.25 mil aluminized mylar and Dacron scrim separator. All of the non Dacron layers were grounded at several locations by using one inch wide conductive copper tape interleaved in accordion fashion so as to make contact with the vapor deposited aluminum side of each layer. A ground wire with lug was then riveted to the blanket copper tape and the other end fastened to the central structure. The thermal blanket lay-up and grounding method is illustrated in Figure 5. Figures 6 & 7 show the FPP deployed on the ISS.

Electrical Power System Design

System Architecture

Physically, the Electrical Power System (EPS) for the FPP consists of two of the four boards within the Main Electronics Box (MEB), a separate housing containing a secondary (rechargeable) battery, and two solar panels which are attached by struts to the exterior of the FPP structure. The so-called Power Tracking Board is the primary power converter, i.e., it supplies variable power from the solar panels to replenish the battery. The Power Converter Board is the secondary power supply, which provides continuous, conditioned power to the rest of the FPP. These two boards are described in more detail below. The MEB also houses the Microcontroller Board (ECC) for the FPP, as well as the so-called Miscellaneous Board which has some analog signal conditioning circuits and other electronics that did not conveniently fit on the other boards.

The two problems of immediate and paramount importance at the onset of the design effort were to (a) identify and procure a small solar array capable of producing enough electrical power for the system, and (b) identify and procure a small battery of suitable size and voltage. In both cases, cost and availability were critical issues; we did not have time for the usual specification, design, and development phases associated with such items.

With the help of the folks at GRC, we were able to quickly identify some old prototype solar panels that were intended for development and testing purposes for the original Space Station Freedom. These panels were each approximately one square foot in area, and although (at 12.5% efficiency) they were by no means state-of-the-art by today's standards, it seemed that two of them would be adequate for supplying the estimated required power. At +25 °C, the open-circuit output voltage of each panel is 9.76 Volts and the short-circuit current is 2.64 Amps. The peak-power point is at 7.34 Volts and 2.31 Amps, giving ~17 Watts maximum power (per panel, when directed at the sun).

The battery proved to be more problematic. Because batteries are inherently somewhat dangerous, the approval process for batteries to be flown in space (and on STS and ISS in particular) is generally very slow and cumbersome. We did not have the time or manpower to get a new battery pack designed and approved in the standard way. For this reason, we concentrated on trying to find a battery that had already gone through the approval process. Several different battery packs are (or in the past have been) in use by the astronauts for various purposes, mainly having to do with their power tools. Nearly all of these battery packs were unsatisfactory for our application for one or more of the following reasons: too large, oddly shaped, limited number of charge-discharge cycles, or too high in voltage to be conveniently used with a simple system architecture.

Eventually the choices were pared down to two. Eagle-Picher had some small Nickel-Cadmium cells left over from an earlier program, which they were willing to custom-assemble into a small battery pack. Also, we had heard about a small Nickel-Metal-Hydride (NMH) battery that is used to supply power to the astronauts' helmet lamps. Unfortunately, the price quoted to us by Eagle-Picher was significantly more than we had budgeted for the battery, so at that point, we concentrated our efforts on trying to obtain one of the astronaut battery packs, also known as an EVA Helmet Interchangeable Portable (EHIP) Battery Pack Assembly. Within a few weeks, we succeeded in obtaining (from JSC) one flight-quality battery assembly, as well as a prototype assembly that we used for characterization and testing.

The EHIP Battery Pack Assembly actually comprises three separate strings of cells, each string consisting of five NMH cells. Each cell (and string) has a capacity of 3.5 Ampere-hours. The voltage across a string is approximately 5 to 7 Volts, depending on the state of charge. Thus, the entire assembly has an energy storage capacity of approximately 60 Watt-hours, much more than the minimum necessary for this application. Since we were planning on using only two solar panels anyway, we decided to use only two of the three battery strings, and to design the primary power system as a dual (redundant) string configuration. The advantage of such a configuration is that it would be somewhat failure-tolerant, possibly allowing some limited operation of FPP even if one of the two solar panels or battery strings were to fail.

Despite the unused string, the EHIP Battery turns out to be a very good match to the rest of the FPP design. Even 40 Watt-hours of energy storage capacity is plenty for the mission, and the mass of the Battery Pack Assembly was within our budget. NMH cells can undergo many thousands of charge-discharge cycles without significant degradation. Additionally, since the battery voltage is always greater than 5 Volts (as long as the batteries are not deeply discharged), a simple buck regulator could be used to provide +5 Volts to the FPP electronics, which somewhat simplifies the design of the Power Converter Board.

The solar panels were a good match from the point of view of size and available power. It was slightly unfortunate that their output voltage (at high operating temperatures) was somewhat less than could be accommodated with a buck regulator in the Power Tracking Board. This problem was solved by instead using an inverting buck-boost converter, which can provide a voltage that is either less than or greater than the input voltage. As a result, the positive side of the solar panels is the side that is connected to "ground," i.e., the structure of ISS.

EPS Electronics

A block diagram of the EPS is provided in Figure 8. The two buck-boost converters reside on the Power Tracking Board (PTB) along with the two current-summing diodes. The operating points of these two converters are controlled independently by the ECC in coordination with the charging algorithm, as described below.

The charging algorithm specifies the desired output current of each PTB converter. This specified current is software-limited to a maximum value of 1.75 amps, but may be less as required to prevent overcharging the battery. An analog "Minimum Circuit" on the PTB further limits the controlled output current to the lesser of the following three values: (a) the current specified by the algorithm, (b) a value which is dependent on the solar panel voltage (to keep it from collapsing when insufficient power is available), and (c) 3.33 Amperes. The value that is dependent on the solar-panel voltage varies linearly from zero at 5 Volts to 3.33 Amperes at 7.5 Volts. This fairly straightforward design results in an operating point which is not to far from the peak-power point of the solar panels under most conditions.

An integrator provides the control voltage for each converter's Pulse Width Modulator (PWM). This integrator operates within a local (hardware) control loop, ramping up or down as required to make the actual output current of the converter equal to the value specified by the Minimum Circuit. Analog signals report the PTB output current, battery charging current and battery voltage back to the ECC to complete the overall system control loop. Note that the PTB output current is called "Input Current" elsewhere in this report, because it is the input current to the combined Battery and Power Converter Board.

The Power Converter Board (PCB) provides the various conditioned power-supply voltages for the rest of the FPP electronics. Because it is considered undesirable to allow the battery voltage to fall below about 1 Volt per cell, there is an undervoltage lockout circuit at the input to the PCB. This switch effectively disconnects the system from the battery whenever the voltage (at the output of the current-summing diodes) is below 4.65 Volts. Some hysteresis prevents the switch from closing again until the voltage is above 5.3 Volts. Note that the voltage drop across the summing diodes will result in voltages at the battery pack that are a few tenths of a volt higher than these values.

As mentioned earlier, a simple buck regulator provides the +5 Volt power. Note that the actual voltage out of this regulator will have dropped almost to 4.5 Volts by the time the undervoltage lockout circuit kills the power, since the output voltage of a buck regulator is always less than the input voltage.

A low-power boost converter is used to supply the 19.5 Volts required by the Voltage/Langmuir Probe instrumentation. A separate boost converter provides +7.5 Volts for the Wireless Interface (the Communication System), and finally, a buck-boost converter provides –5 Volts to the analog electronics. All four converters were designed to have smooth turn-on characteristics that were closely matched.

As evidenced by the telemetry data, the EPS has performed well, except during the periods when the insolation is inadequate to supply the minimum power required to operate the FPP. Following those periods, the FPP has repeatedly come back to life, as it was designed to do. Figure 9 presents some

typical EPS on orbit telemetry data taken in February of this year. When interpreting this data, it is important to understand that whenever a solar panel is not illuminated by the sun, the corresponding Input Current is incorrectly reported back to the ECC. That is because the analog circuit that provides that signal to the ECC is unpowered. This does not affect the operation of the EPS, however, because the Commanded Current signal from the ECC is ignored by the PTB during those intervals for the same reason.

CPU & Software Design

We provide here a brief description of the Aeroflex/UTMC CPU UT131 Embedded Controller Card (ECC) only to the extent that it is somewhat necessary to understand the platform on which the software resides. This card, which was provided by GRC as GFE, was chosen due to its availability, radiation tolerance, and capability for conversion of analog signals into digital representations. The main processor on the UT131 is the UT80CRH196KD which is compatible with Intel's MCS-96 instruction set. The peripherals available to the ECC are: 32 Channels of 14 bit A/D conversion at 41.5 kHz; 32 Output Discretes; 4 RS-422 Serial Ports; 1 RS-485 Low Power Serial Bus; 64K bytes of Instruction PROM; 64K Bytes of DATA SRAM.

The commercial 'C' compiler and interactive debugger used are the Tasking & Chip View combination.

The top level processing loop, illustrated in Figure 10, is executed every 100 milliseconds and consists of the following five hierarchical functions:

1. Power system management;
2. Read the science data (V-body, Lang. Voltage, & Lang. Current.);
3. Increase the Langmiur probe voltage by one step (75 mV);
4. Service the communication link to the RSU;
5. Reset the Lamgmiur Voltage (if necessary).

The power system management routine controls the following six major processes: \

1. Read the housekeeping parameters;
2. Compute the power system parameters;
3. Compute the Heater System;
4. Compute the System Status;
5. Set the Commanded Current digital word for battery charging in the power management board;
6. Set the other discretes such as the heaters.

The Housekeeping portion of the power management routine consists of exercising the ECC A/D converters. There are nineteen different input parameters representing three categories of measurements defined as power system, temperature, and probe status.

Power measurements comprise the following four parameters for each battery string:

1. Battery Voltage;
2. Battery Charge Current;
3. Solar Array Input Current;

and;

4. Battery Charge Sign.

Temperature measurements comprise two battery, two Solar Array, and three electronic assembly temperatures one each for the MEB, RSU and SCU.

Probe status measurements consist of current draw, SCU Voltage (Positive power supply), and SCU Voltage (Negative power supply), a total of four measurements.

The "compute power system parameters" routine uses the power and temperature measurements to derive the command charging current which is then issued to the power management board via a 16 bit digital word. The command charging current limits the total amount of battery charging current. This avoids over charging the NiMH secondary battery which is an important factor in extending the battery life. The battery charge current sensor is a MAX472 which provides a two signal output; the absolute value of the charge current, and a battery charge sign (binary) value. The first computational step is to convert the absolute value of the battery charging current into the actual value by combining the numerical value and the sign, with positive current indicating charging the battery. Laboratory testing of the NiMH battery revealed that the internal resistance of the battery is largely independent of the charge state of the battery. The internal resistance of the battery is determined solely from the battery temperature via a second order polynomial. Using the measured battery voltage; and the calculated system current draw; the open circuit voltage of the battery is determined from:
Voc = Vbat - Iload * Rinternal.

The percentage of battery charge is calculated using this open circuit voltage. The percent charge value is based on empirical data represented by a piecewise linear curve fit of: 0% @ 5.0 Volts; 85% @ 6.5 V; 95% @ 6.8 Volts; 100% @ 7.2 volts. The commanded charge current is then derived using a maximum allowed charge current of 1.75 Amps (C/2) from zero percentage charge up to 85% then linearly tapering to 40 mA at 100% (C/88 trickle charge). After the preliminary charging current is determined based upon the battery charge state; the effects of charging the battery outside of its normal operating temperature is considered. A multiplier factor called the Charging Temperature Factor (CTF) is derived which reduces the commanded current for the extreme temperature conditions. The CTF temperature correction coefficients correspond to five operating regions:

1. If the temperature of the battery is less than 5 deg C the CTF = 0.02. This allows for a small (1.75 * 0.02 = 35 mA) trickle charge when the battery is cold and undercharged.
2. Increase the CTF linearly between 5 and 12 deg C.
3. The normal operating temperature region of the battery between 12 and 38 deg C where the CTF = 1.0.
4. Between 38 and 45 deg C. decrease CTF linearly
5. Above 45 deg C. set CTF = 0. This prevents charging a hot battery.

A plot of CTF is provided in Figure 11.

An interesting feature of the battery charging algorithm is what we call the "Phoenix Mode" for powering up the system. This mode enables a power up from a completely drained battery if sufficient solar insulation is available. During the Phoenix mode the command current is set to 50% as soon as the startup initialization is completed. This allows the system to re-boot. If the battery is too hot; the command charging current (charging the battery) is set to zero allowing the solar arrays to provide enough power to run the rest of the system without over charging and possibly damaging the battery.

The "compute the system status" routine supports the operation of the status indicator lights and provides an effective method for implementing an independent 'watchdog' timer power reset. There are three LED's used to provide visual indication of system status. Flashing indicator lights confirm that the probes and solar arrays are correctly installed and that the ECC is functioning. This visual

feedback feature is one example of astronaut input.

The purpose of the independent watchdog timer circuit located on the power management board is to cycle power if the ECC does not issue a specific discrete every three seconds. Cycling the power in this way forces a system re-boot. This reset will be executed under three conditions:

1. The ECC experiences an SEU or other system crash preventing instruction execution;
2. When specifically commanded from the RSU;
   and;
3. If the RSU does not send a request to transmit once per minute.

Since the 'ECC heartbeat' discrete is issued every 100 msec, the 3 second watchdog timeout offers plenty of margin from inadvertent reset by an EMI induced event.

The "compute heater system" routine simply determines the temperatures of the Battery and RSU and issues a power on discrete to the respective heaters if necessary.

Setting discretes is performed in two parts;

1. The commanded charge current is issued in a sixteen bit word. Twelve bits for the commanded current level and two bits for the particular battery string's read strobe (allowing a command to either battery independently).
2. Other discretes include the heater system (one bit each for the RSU and Battery heaters). Power board status using one bit each for the ECC Heartbeat; Flashlight and FPP_On discretes which drive the probe indicator lights.

Reading the science data consists of exercising the ECC A/D converters for the V-body probe, Langmiur Voltage sweep, and Langmiur Current outputs from the SCU. This data was simply stored into a 3 x 200 array for transmission to the RSU when commanded. The Langmiur probe voltage is increased by one step (75 mV) every 100 msec by simply issuing the appropriate discrete to the SCU. After the Langmiur probe voltage is incremented 200 times, a discrete is issued to force the SCU to reset the voltage to +10 volts beginning the sweep again.

200 steps at 100 msec results in a natural break every 20 seconds. Thus, every 20 seconds the Remote Sending Unit (RSU) sends a request to the ECC to transmit the science and housekeeping data. This data constitutes 200 V-body Probe voltages; 200 Langmiur Probe Voltages and associated currents; and 32 Housekeeping parameters.

The communication servicing consists of four functions:

1. Process the communications receive ISR;
2. Disable the communication power saver feature on the RS-422 driver chips.
3. Decode the RSU transmitted command.
4. Transmit the appropriate response.
5. Release communication link and enable the com power saver mode.

The following four RSU commands are employed:

1. System Reset: This will force a power reset by suspending the ECC heartbeat until the power reset is issued by the power management board via the watchdog timer.
2. Channel Setup: Sends a pre-defined data package to the RSU defining the data format.
3. Start Data: Sends the start data header which is required before every data transmission.

4. Transmit Data: Sends the bulk of the data in seven packages; each with a check sum and an acknowledgement.

SUMMARY

In conclusion it should be recognized that the FPP project was only able to achieve success against what many believed to be insurmountable odds by establishing a true project wide team. NASA (GRC and JSC), Design_Net, UTMC and INVOCON worked together in a shared responsibility environment. This way of doing things has proven to be an effective means for risk mitigation in complex, in high profile projects. A central theme to Design_Nets business plan is to continue pursuing projects and customers that offer similar challenges and working relationships. This seems to be a natural course to take, not only because of demonstrated successes like the FPP, but also because this approach and our engineering network culture fit together so well. See yah on the Station.

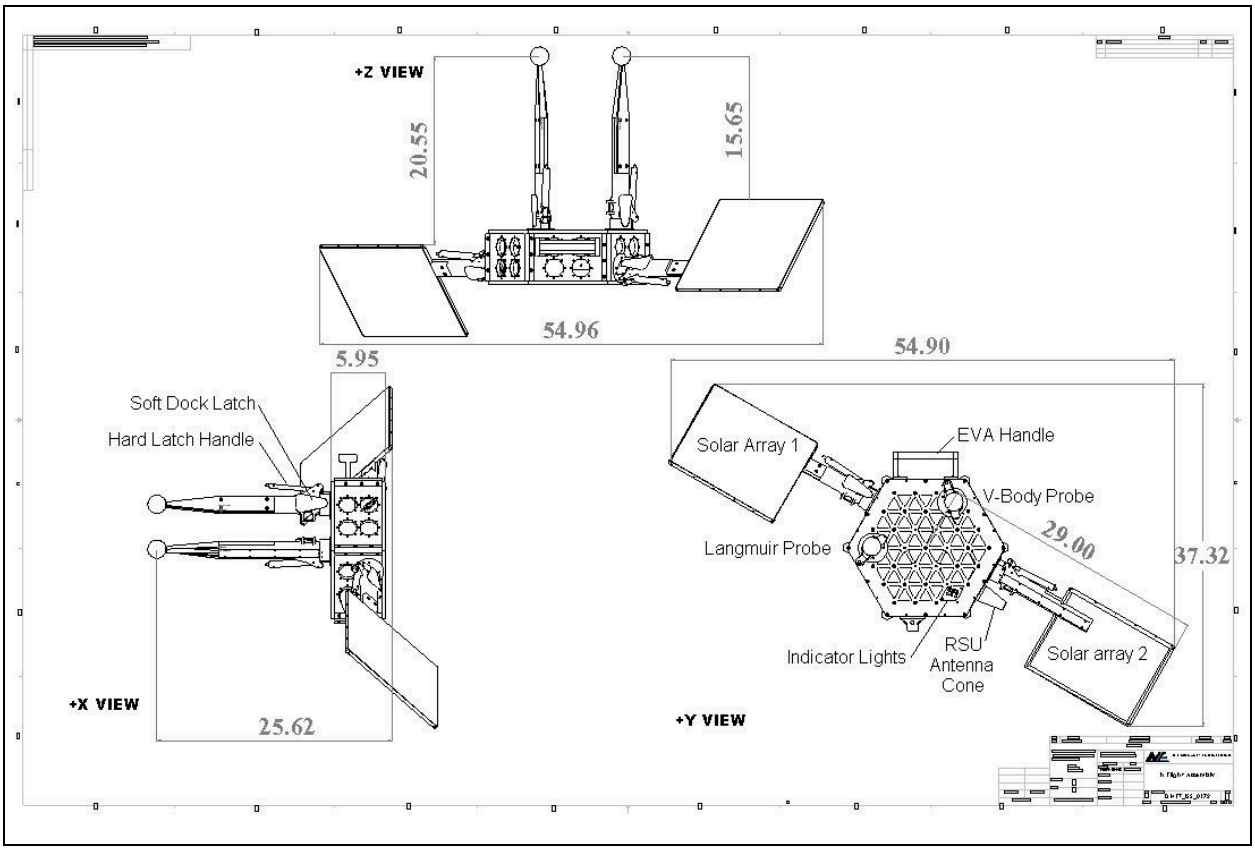

Figure 1 - FPP Components and Dimensions (inches).

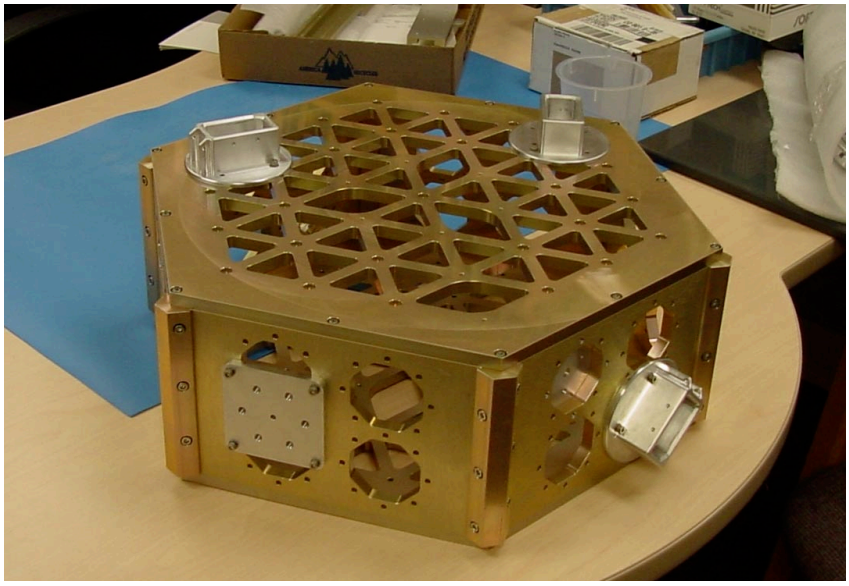

Figure 2 – The FPP Central Structure.

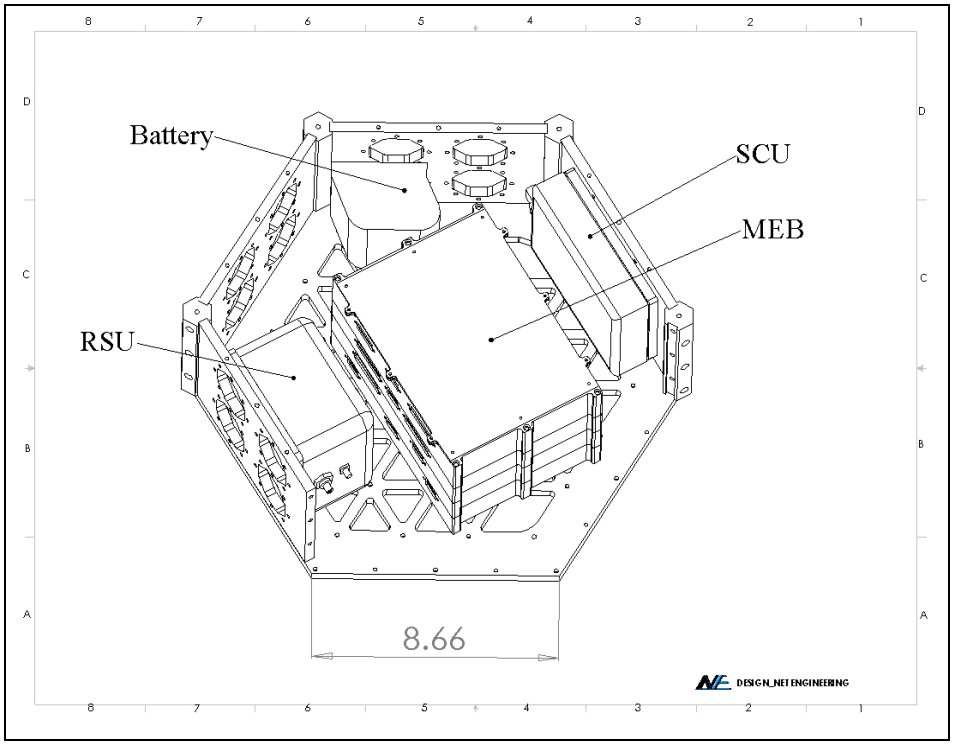

Figure 3 – Cut Away View of Central Structure Indicating the Components Within.

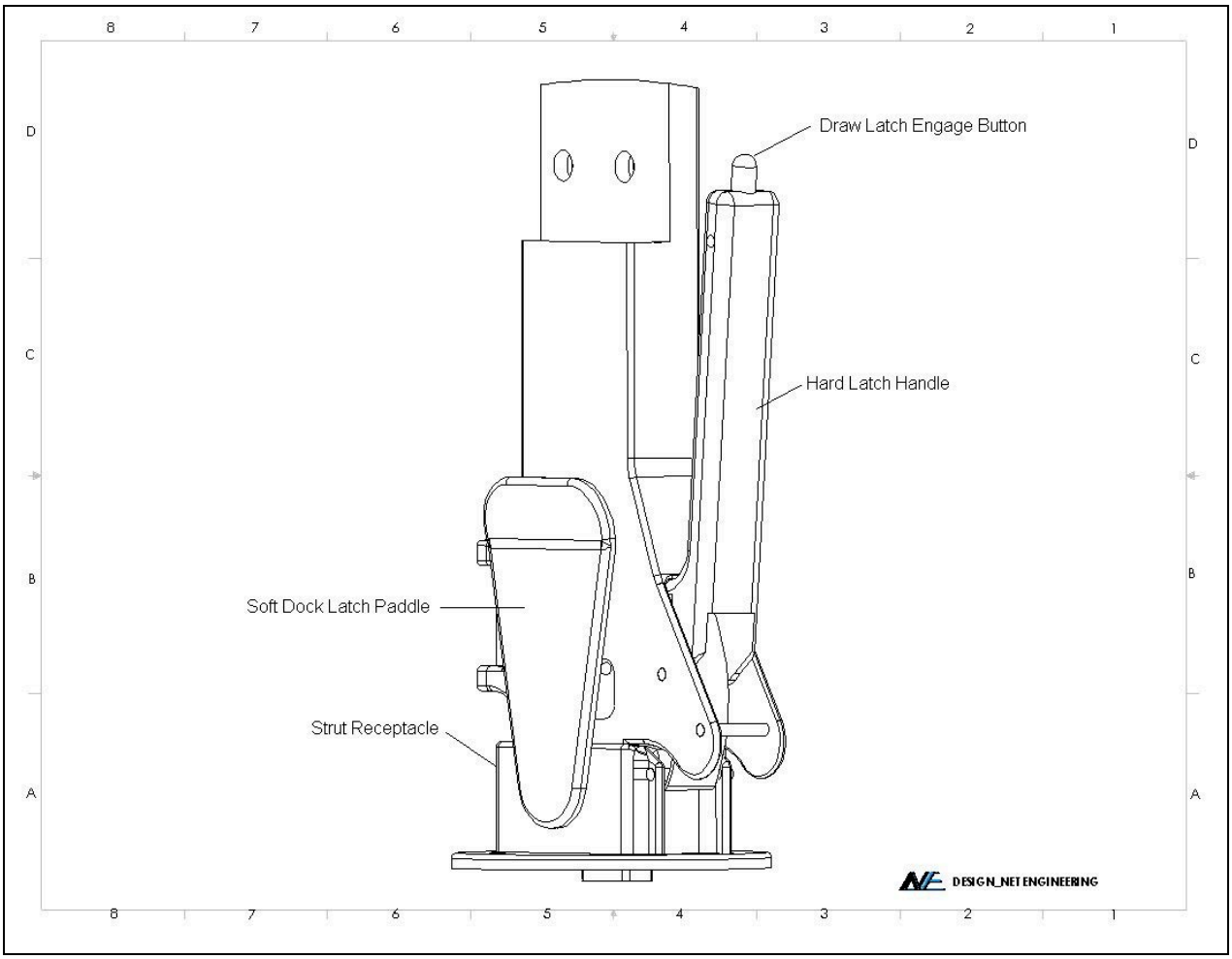

Figure 4 – Solar Array and Probe Strut Latch Mechanisms

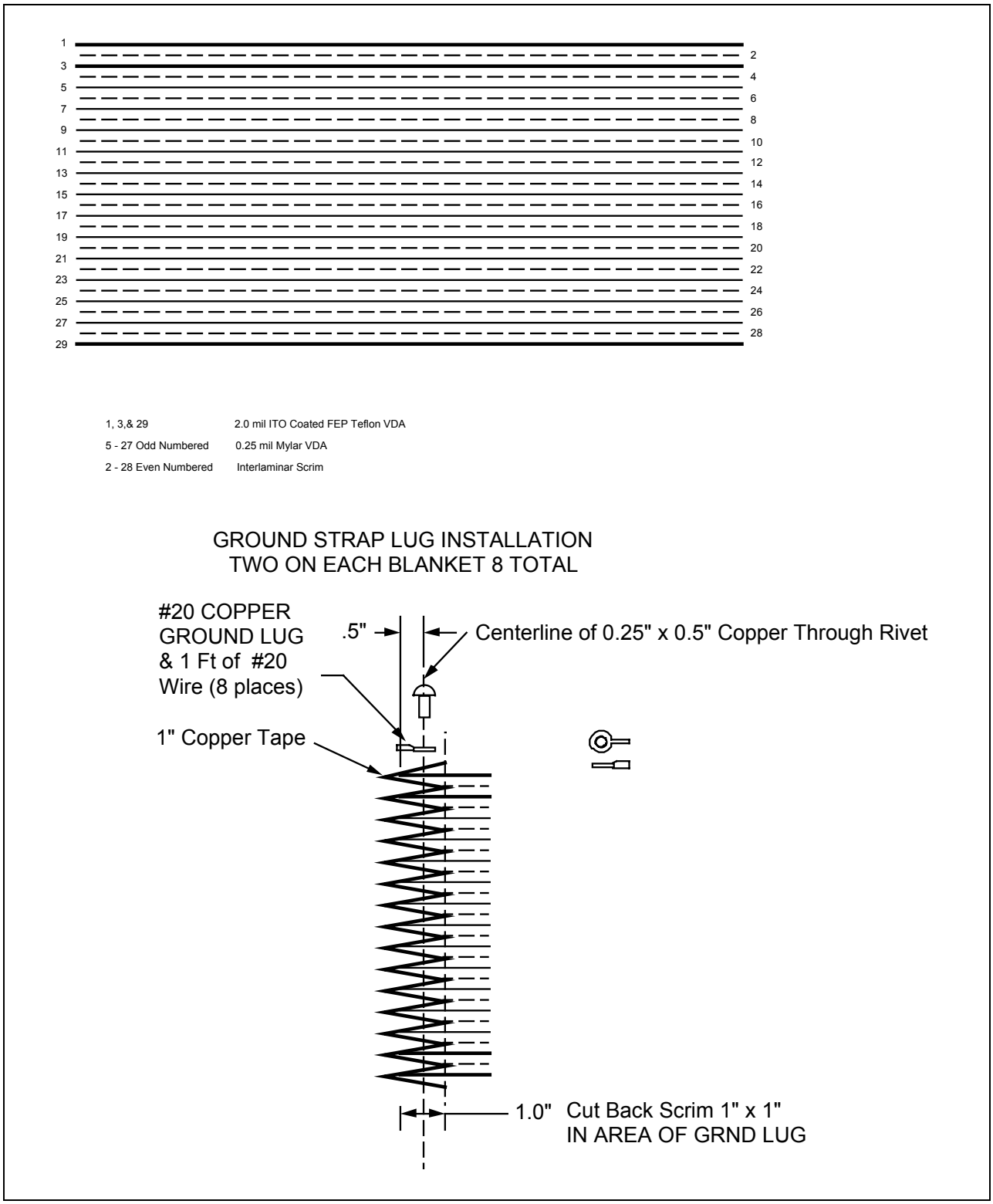

Figure 5 – Thermal Blanket Material Lay-up and Interlayer Grounding Method.

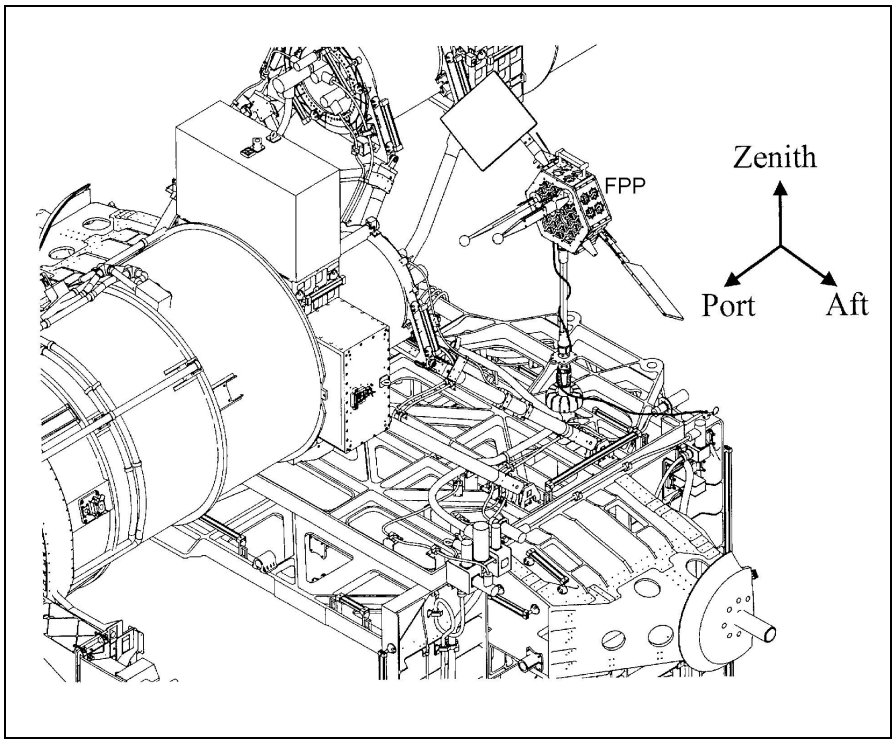

Figure 6 – Depiction of the FPP Installed On The Top Of the ISS P6 Truss.

Figure 7 - Photo of the FPP Following Installation (Note the Gold Kapton Thermal Blanket and the Green Status Indicator Lights Just Below Center of the Photo).

Figure 8 - Block Diagram of the EPS

Figure 9 - Example of EPS On Orbit Telemetry Data (About 8 Orbits Worth).

Figure 10 – Top Level Flow Diagram of Key FPP Software Architecture Elements.

Figure 11 – Battery Charging Algorithm Temperature Correction Factor