A Nanosatellite Mission to Investigate Equatorial Ionospheric Plasma Depletions: The U. S. Air Force Academy's FalconSat-2

L. Habash Krause, J. J. Sellers, C. L. Enloe, R. Humble (USAF Academy)
J. White (Colorado Satellite Services)

Abstract – An overview of the United States Air Force Academy's (USAFA's) FalconSat-2, a nanosatellite designed to investigate F region ionospheric plasma depletions, is presented. Instruments aboard FalconSat-2 will sample *in situ* plasma density and temperature at a rate of 10 Hz and 1.0 Hz, respectively. The choice of sampling rate provides for resolution of 2-10 km plasma depletions, important since plasma anisotropies of this scale size are known to disrupt Ultra High Frequency (UHF) radio transmissions. A novel sensor, the Miniature Electrostatic Analyzer (MESA), is presently under development by USAFA faculty and will be used to measure plasma density with its heritage flight aboard FalconSat-2. In addition, a traditional electron Retarding Potential Analyzer (RPA) will be used to measure plasma temperature and density, the latter of which will be used to validate the MESA performance on orbit. The mission's scientific objectives require a low altitude (300-500 km), medium inclination (45 degrees) orbit; these requirements, coupled with the availability of launch opportunities through the Space Shuttle's Hitchhiker Program, provide motivation to develop the FalconSat-2 mission for launch via the Hitchhiker's Palette Ejection System (PES). The satellite bus design consists of a mixture of Commercial Off-The-Shelf (COTS) hardware and original design by USAFA cadets and faculty. Details of the mission and satellite design, as well as key challenges uniquely pertinent to undergraduate satellite programs, are addressed.

Introduction and Background

Following USAFA's design, build, and launch of two satellites, the experience and lessons learned from these missions have contributed greatly to the structure and philosophy of the Small Satellite Program in its present state. Significant challenges exist when developing a space program exclusively for undergraduates, especially for those with heavy non-academic workloads. We have made significant progress in the search for the optimum balance between providing students with latitude to make mistakes and learn from them and providing them with sufficient guidance to ensure a successful mission. In addition, members of the program's research faculty are committed to providing quality research relevant to the needs of the United States Air Force (USAF), Department of Defense (DoD), and the general space communities. Thus, the objective at the program level is to have cadets participate interdependently with faculty to produce space research missions that return useful scientific and engineering results. The program's motto is "Learning Space by Doing Space," and the success of the program is predicated on cadets "learning" how to do space while "doing" it properly.

FalconGold, USAFA's first satellite, was a fixed, secondary payload on an Atlas-Centaur launch vehicle that successfully demonstrated that GPS signals could be resolved above the GPS constellation. Successful operations and data recovery from FalconGold concluded that GPS signals could be used for orbit determination, even beyond the altitude of the GPS constellation [1]. USAFA's second satellite and first "free flyer," FalconSat-1, was launched in January 2000 aboard the first Minotaur launch vehicle (a modified Minuteman II ICBM) along with several other university-built microsatellites. FalconSat-1 flew the DoD-supported Charging Hazards and Wake Studies—Long Duration (CHAWS-LD) experiment that was designed to measure non-uniform satellite surface charging created by the spacecraft's plasma wake. The intent was to measure the severity of the non-uniform charging in order to assess the hazards for spacecraft operations in the wake of larger bodies. Unfortunately, a power system malfunction became apparent soon after deployment. No useful scientific data were returned, and despite repeated attempts to recover the spacecraft by the cadet/faculty operations team, the FalconSat-1 mission was declared a loss after only one month.

Being launch schedule driven, FalconSat-1 proceeded directly to a proto-flight model, without first building engineering models or development tools. The lessons learned from FalconSat-1 have motivated significant structural change to the program, with the intention of building a program first and a satellite second. Thus, the new approach has been to focus on building up infrastructure, including design and development tools that can serve as a firm foundation to allow the design to evolve steadily over the course of several missions. The FalconSat-2 design effort is aimed at developing a flexible platform that can be readily adapted and enhanced to meet future payload requirements and secondary launch opportunities.

FalconSat-2

The design of the FalconSat-2 (FS-2) mission is driven by the need to support the Miniature Electrostatic Analyzer (MESA) payload, an experiment approved by the Fall 2000 DoD Space Experiments Review Board (SERB). The MESA is designed to measure plasma density spectra for the study of ionospheric plasma depletions, and its heritage flight will be that aboard FS-2. Due to difficulties and complications with FalconSat-1, we have bounded the design problems for FalconSat-2 by adopting the core subsystems developed by Surrey Satellite Technology Limited (SSTL), UK. SSTL has in the last year produced their first nanosatellite, a 6.5 kg satellite called SNAP [2], employing easily integrated modules for each of the primary systems. We will capitalize on Surrey's success: FalconSat-2 will use the SSTL developed and built Power, Communications, and Data Handling subsystems.

FalconSat-2 is a 4-phase, 4-system mission. The FalconSat Avionics Simulation and Testbed (FAST) forms the foundation for future FalconSats and provides an environment for software, subsystem, and payload development and testing. The FalconSat-2 Engineering Model serves as an engineering development unit to verify structural design, subsystem interfaces, and assembly, integration and test procedures. The Engineering Model is designated to undergo the most rigorous and extensive environmental and functional testing. The Qualification Model will be identical to Flight Model, and it will be used for rigorous testing to "qualification" levels. Finally, we will deliver a Flight Model, designed for launch on the Space Shuttle Palette Ejection System, and designated for testing to "acceptance" levels. In addition to these hardware deliverables, and in parallel development, will be FalconSat Application Software (FAS). FAS will evolve over the course of the program, developed using the FAST facility, and be controlled by specific versions and releases.

The remainder of the paper covers the scientific and technical motivating factors driving the FalconSat-2 mission objectives and requirements and an overview of the mission, satellite, and subsystem design characteristics.

The FalconSat-2 Science and Instrumentation

Ionospheric Plasma Bubbles/Depletions: Background

Ionospheric plasma bubbles are localized depletions in plasma density (relative to the ambient) that convect upwards due to buoyancy. It is postulated that topside (*i.e.*, above the F peak) ionospheric depletions originate in the bottomside ionosphere as a result of the Gravitational Rayleigh-Taylor (GRT) instability, an instability that is associated with a heavy fluid being supported by a lighter (less dense) fluid. A perturbation in the boundary separating the two fluids may result in the upwelling of the lighter fluid into the heavy fluid, effectively forming a "bubble" in the medium. Here it is noted that not all plasma depletions in the ionosphere are plasma bubbles. An *ad hoc* rule of thumb is that if a plasma depletion is observed in the bottomside ionosphere, it may or may not be a bubble, but a plasma depletion observed in the topside ionosphere is most likely a bubble due to the unlikelihood that formation occurred topside[*].

Plasma bubbles introduce non-uniformities in the medium through which radio waves propagate, and they are thus are prone to introduce irregularities in the propagation or reflection of signals within this environment. For example, consider the effect of plasma bubbles on an ionosonde. An ionosonde is an ionospheric sounding system that is used to

[*] Recent studies have indicated the presence of topside formation of synoptic-scale plasma depletions at very high (>1000 km) altitudes [3].

determine the plasma density as a function of altitude below (above) the F region peak to characterize the bottomside (topside) ionosphere. Spread F is the condition where the F region echoes are 'smeared out' over the frequency domain (in the case of frequency spread F) or over the range domain (in the case of range spread F). Equatorial Spread F (ESF) is the spread F events within ± 20° about the magnetic equator. Recently, it is not uncommon for scientists to refer to the collection of associated phenomena spanning the atmospheric and ionospheric physics as ESF physics. USAF is interested in ESF physics since scintillations, or signal irregularities in amplitude or phase, are produced in radio transmissions when the electromagnetic waves propagate through the anisotropic plasma medium – sometimes to a degree so severe that the signal-to-noise ratio precludes reception.

There are several techniques to measure plasma bubbles. *In situ* measurements of plasma density are accomplished with a variety of electrostatic analyzers, such as Langmuir probes, impedance probes, retarding potential analyzers, and ion drift meters. Remote methods of observation include passive techniques, such as imaging or photometry of airglow emissions, and active techniques, such as radio wave scintillations, ionosondes, and incoherent scatter radar. Due to the desire to observe small-scale (1-10 km) plasma depletions, *in situ* sensors should be located on Low Earth Orbit (LEO) platforms.

Mission Science Objectives and Success Criteria

The MESA instrument is an electrostatic analyzer in the form of a patch sensor designed to measure electron fluxes of energies from thermal to mildly suprathermal energies. A pair of MESA patch sensors and an electron Retarding Potential Analyzer (RPA) will operate as a suite to provide *in situ* sampling of ionospheric electron density and temperature along the FS-2 orbit track. The MESA energy analyzer consists of 1,920 individual electrostatic lenses in a stack of insulating and conducting sheets. The latter have been photolithographically patterned to form the electrodes of the lenses. The RPA, a planar gridded device, is a known technology against which the performance of the new MESA design can be compared. Each MESA sensor will sample the electron density over three sensor-unique energy channels (to obtain six-channel spectra) at a rate of 10 spectra per second. The RPA will be swept over a voltage range with sufficient resolution to obtain electron temperature and density at an effective rate of 1.0 measurement per second. The MESA/RPA sensors are mounted to the outside top wall of the spacecraft as shown in Figure 1.

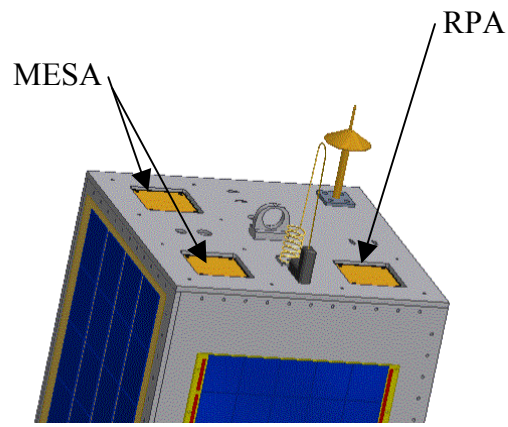

Figure 1: Nominal arrangement of the MESA patch sensors on the top face of FS-2.

The primary operating mode of the MESA/RPA sensors is the data collection mode during spacecraft eclipse. The MESA/RPA data collection will begin 50 km (+/- 35 km) before crossing from the dayside into the penumbra of the Earth. Collection should continue until the spacecraft is exposed to sunlight (*i.e.*, when the spacecraft exits the Earth's penumbra heading into the dayside ionosphere). In the fast data collection mode, the MESA sensors collect 10 spectra of electron fluxes per second. With a 16 bit data word, a 6 channel data collection mode would result in 16 bits × 6 energy channels × 10 spectra per second = 960 bits per second. The RPA measures probe current over a voltage sweep consisting of 20 steps, generating another 320 bits of data per second. Since the MESA/RPA sensors collect data exclusively during eclipse, for an average eclipse time of 37 minutes per orbit, the nominal data collection rate is 2.7 Mbits/orbit. Data reduction algorithms will be employed to reduce the downlink requirement to a nominal value of 200 kbits/orbit. A slow data collection mode (one spectrum per second) will be available for contingency purposes in the event that early mission data analysis indicates an issue with the 10 Hz mode.

The primary (minimum) science objectives of the FS-2 mission are: (1) To investigate the morphology of plasma depletions in the F region ionosphere, especially in the low and mid latitudes, and (2) to demonstrate the utility of MESA in the measurement of thermal ionospheric electrons. The secondary (desired) science objective is to investigate the structure and evolution of ionospheric plasma bubbles by taking advantage of opportunities to make *in situ* multi-point measurements of electron densities within a single structure. To accomplish this objective, the MESA experimenters will coordinate a data exchange with experimenters from other Low Earth Orbit (LEO) missions making *in situ* plasma measurements in the ionosphere.

The FS-2 mission science success criteria have been established for each experiment objective, outlined as follows:

- Primary Objective 1: The level of success is the fraction of the six-month minimum experiment duration during which data in fast mode (*i.e.*, 10 spectra per second) were obtained, reduced, and successfully downlinked. For example, if MESA gathered data in fast mode over four months only, then the mission would be 67% successful in attaining this particular objective. If the instrument had to be placed in slow mode (*i.e.*, one spectra per second,) for greater than 50% of the nominal six-month mission duration of data collection, then the success rate should be halved.
- Primary Objective 2: The level of success is a) 100% if it is demonstrated that MESA is capable of measuring thermal ionospheric electrons over six energy channels at a rate of 10 spectra per second, b) 75% if it is demonstrated that MESA is not capable of making these measurements at 10 spectra per second, but it is demonstrated that samples of one (six-channel) spectra per second are feasible and reliable.
- Secondary Objective: Success is 100% if MESA passes through a plasma depletion simultaneously with another satellite, with both spacecraft making *in situ* ionospheric plasma measurements. Success is 100% even if there is only one encounter of this type during the entire mission. Success is less when the two satellites enter the plasma depletion at different times: Success = $[1-(\Delta t)/t_{orbit}]$ * 100%, where Δt is the difference between the time the first satellite exits the plasma depletion and the time the second satellite enters the same plasma depletion, and t_{orbit} is the average orbital period of the two satellites. Since MESA has no control over the orbit of the second satellite, it would be beneficial to select a spacecraft precession rate that maximizes the number of conjunctions with a second, well known ionospheric plasma diagnostic spacecraft (*e.g.,* Air Force Research Laboratory's Communication/Navigation Outage Forecasting System (C/NOFS)) during eclipse and near the magnetic equator.

Minimum FS-2 mission science success is attained if the following two conditions are met: 1) the average success level of the two primary objectives is greater than 75%, and 2) neither level of the two success criteria of the primary objectives is less than 50%. Desired mission success is attained when the following two conditions are met: 1) the average success level of the two primary objectives is greater than 90%, and 2) the secondary objective success level is greater than 50%.

MESA/RPA Engineering Layout

Each MESA sensor and the RPA will be fastened to the spacecraft with eight bolt/nut pairs, and RTV will be applied to these fasteners. Each MESA/RPA patch sensor has the following dimensions: 8.1 cm (3.2 in.) wide, 8.1 cm (3.2 in.) long, and 1.0 cm (0.40 in.) tall. Refer to Figure 2 for the top and side views of the MESA sensor. The mass of the MESA experiment consists of 0.20 kg per MESA/RPA patch sensor × 3 sensors + 0.15 kg harnessing = 0.75 kg total MESA experiment mass (no margin). The center of mass of each MESA/RPA patch sensor is approximately the geometric centroid of the rectangular envelope that contains the MESA patch sensor. All MESA sensors should be mounted such that each aperture surface is flush with the spacecraft surface. Precision alignment is not necessary. The sensors may be mounted on a common spacecraft face (see Figure 1), but a minimum distance of 2.5 in. should separate each MESA/RPA sensor from the others. Each MESA sensor has effectively a 30° full cone intrinsic field of view, so if margin of error is considered, a desired FOV clearance should be 45° full cone.

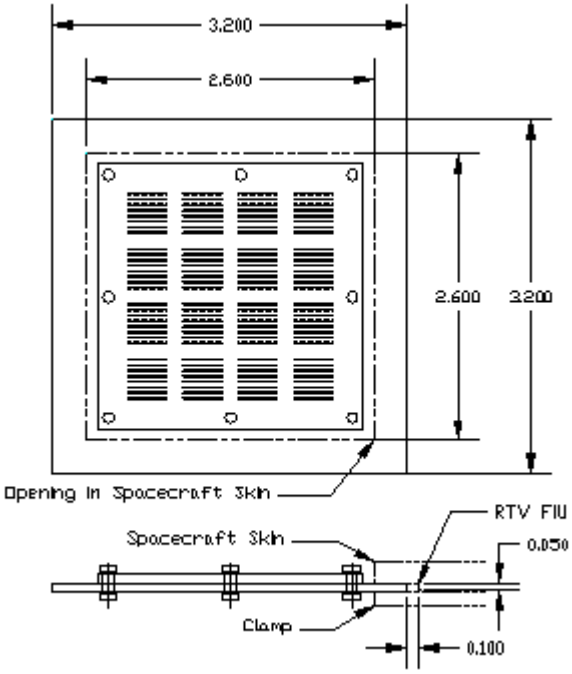

Figure 2. MESA mechanical drawings, top and side views. Units are in inches.

The FalconSat-2 Spacecraft Bus

The primary structure for the FalconSat-2 (FS-2) nanosatellite is a 12.5 in (31.8 cm) cube whose external configuration is shown in Figure 3. With antennas and the PES attach ring, the total height is 15.5 in (39.4 cm). The total mass is less than 50 lbs (23 kg). The majority of FS-2 components will be mounted inside the primary structure. FS-2 will be mounted in a canister, with lid, as part of PES. An interface drawing between FS-2 and the PES container is shown in Figure 4.

FS-2 subsystems include the structure, communication subsystem (VHF Rx, S-Band Tx) (COMM), Electrical Power Subsystem (Power Conditioning Unit, Batteries, Solar Panels) (EPS), the data handling system, and the MESA payload. Physical characteristics of the subsystems, along with operating temperature ranges are shown in Table 1. Functional descriptions for the FS-2 subsystems are presented in the remainder of the paper.

Structure

The FS-2 primary structure consists of four identical milled aluminum side walls, four identical milled center column walls, a milled baseplate, and a milled top wall. All of these components are machined from 2024-T3 and 6061-T6 Aluminum. The spacecraft electronics modules are mounted around the central column walls. The battery box is mounted to the baseplate at the center of the column. The top wall houses the sensor arrays, antennas, and handling fixtures. The PES adapter ring is mounted to the baseplate and forms the female half of the PES separation system. The adapter ring will be machined in accordance with drawings supplied by NASA's Goddard Space Flight Center (GSFC). GSFC will supply a male mating half to ensure proper fit. The PES adapter will also provide mounting locations for the FS-2 separation microswitches that will inhibit activation of the spacecraft prior to deployment as well as provide indication of separation from PES. Figure 5 shows an exploded view of the spacecraft and identifies these primary structural components.

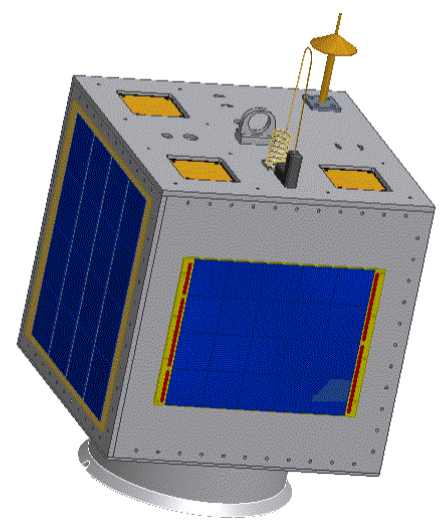

Figure 3. FalconSat-2 external view.

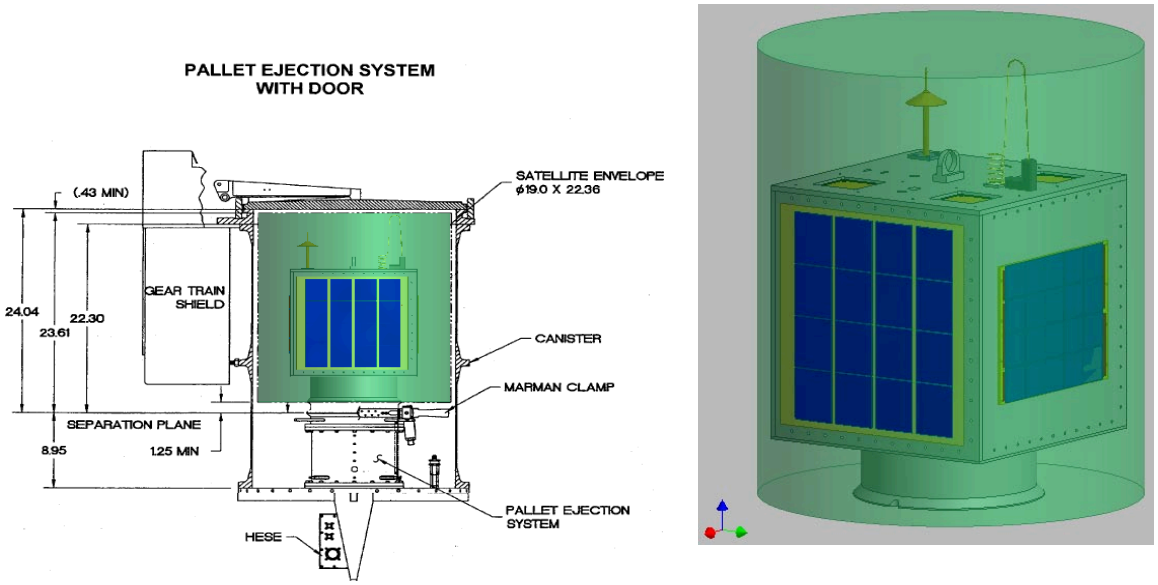

Figure 4. Interface drawings of FS-2 to the PES container. Dimensions are in inches.

Table 1. Summary of FS-2 Subsystem Characteristics

Item	**Payload Characteristic**	*MESA*	*Structure*	*EPS*	*Data Handling*	*Comm*	**FS-2 Total**
1	Weight (approx.)	1 lbs	35 lbs	5 lbs	2 lbs	2 lbs	45
2	Field of View	30°	N/A	N/A	N/A	N/A	30°
3	Nominal Operating Temp (Min)	5°C	N/A	5°C	5°C	5°C	5°C
4	Nominal Operating Temp (Max)	30°C	N/A	30°C	30°C	30°C	30°C
5	Non-Operating Temp (Min)	-40°C	N/A	-30°C	-40°C	-40°C	-30°C
6	Non-Operating Temp (Max)	85°C	N/A	50°C	85°C	85°C	50°C
7	Storage Temp (Min)	-40°C	N/A	-30°C	-40°C	-40°C	-30°C
8	Storage Temp (Max)	85° C	N/A	50°C	85° C	85° C	50°C

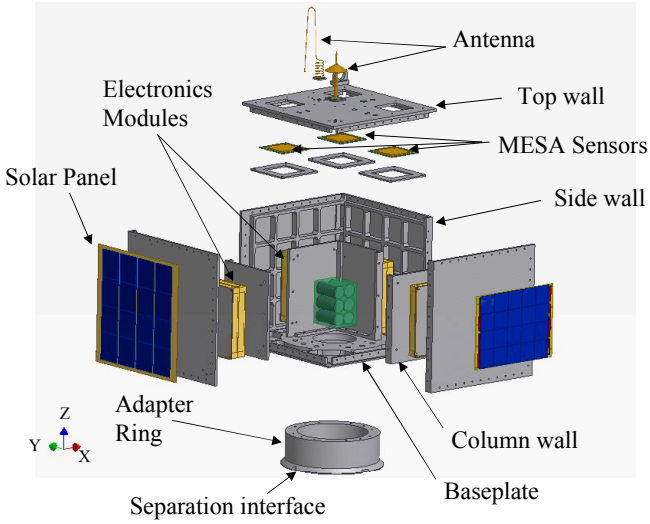

Figure 5. Exploded view of the FS-2 structure

Electrical Power Subsystem

The FS-2 EPS consists of four solar panels, a 7-cell battery pack, a battery charge regulator (BCR), and a power conditioning module (PCM), the latter three items all housed in an aluminum module box. The orbit average power is 2.5 W, the battery capacity is 4.3 A-hr, and the nominal battery operating temperature is 5° to 30°.

The solar panels will consist of 2 panels constructed at USAFA and 2 commercial-off-the-shelf panels built by SpaceQuest, Ltd. USA. All panels will use single-junction GaAs cells. The USAFA-built panels will mount 16 5.5 x 6.5 cm cells directly to printed circuit boards (PCBs) using adhesive. The PCBs will then be attached to the side walls of the spacecraft structure using adhesive. The Spacequest panels will mount 30 41 x 41 cm cells to aluminum honeycomb with fiberglass face sheets using adhesive. The honeycomb solar panel will then be mounted to the side walls of the spacecraft structure using adhesive. Photographs of a prototype USAFA-built panel and a Spacequest commercial off-the-shelf (COTS) panel are shown in Figure 6.

The FS-2 battery consists of 7 Sanyo N4000DRL NiCAD cells housed in a milled aluminum module box approximately 4 x 3 x 3 inches. The battery will be supplied by Surrey Satellite Technology, Ltd. (SSTL), UK, an organization with experience in building Space Shuttle-qualified batteries. The cell vent will be free of obstruction so that the cell is able to vent excessive pressure in the event of an anomaly. For this reason, the ends of the cell will not be potted or covered. Instead, the battery pack will use the following design criteria:

- The battery will have a slow-blow fuse (~7.5 Amp) incorporated into the electrical circuit, into the negative lead of the battery.
- The battery housing will completely enclose the cells.
- There will be two venting holes on each of the two lids of a sufficient size in the battery box (to allow air to escape from the battery case at an acceptable flow rate).
- These holes will be covered with PTFE/GORETEX disks, which will allow the air to escape, but contain any electrolyte leakage.
- A sufficient quantity of Pigmat MAT 301 material should be used to contain the electrolyte of all the cells. (Pigmat is an absorbent material used for chemical spills, *etc.*)
- The Battery box will be leak tight. The use of a SIGRAFLEX gasket between the case and any lids will provide a leak tight seal, but maintain electrical continuity.
- The internal surfaces of the battery will be non-conductive and resistant to the electrolyte. (On SLOSHSAT, a Solithane coating was used, but we propose to use an alternative coating for FS-2 as the Solithane was difficult to work with).

The wiring is rated to meet NASA Shuttle Payload Bay rating requirements. As inadvertent charging of secondary batteries constitutes a catastrophic failure mode, a two-fault tolerant inhibit scheme is required. Four independent inhibitors (Figure 7) will prevent FS-2 battery charging prior to deployment from the Orbiter. The configuration of these switches will be verifiable via a single access port as discussed later in the paper. In addition, a fifth separation switch will be installed before the PCM. This switch will prevent stray current from the solar panels from causing a soft start of the PCM controller that could cause it to hang up during operation. As this switch is not a Shuttle safety item, no external monitoring of this switch position will be developed.

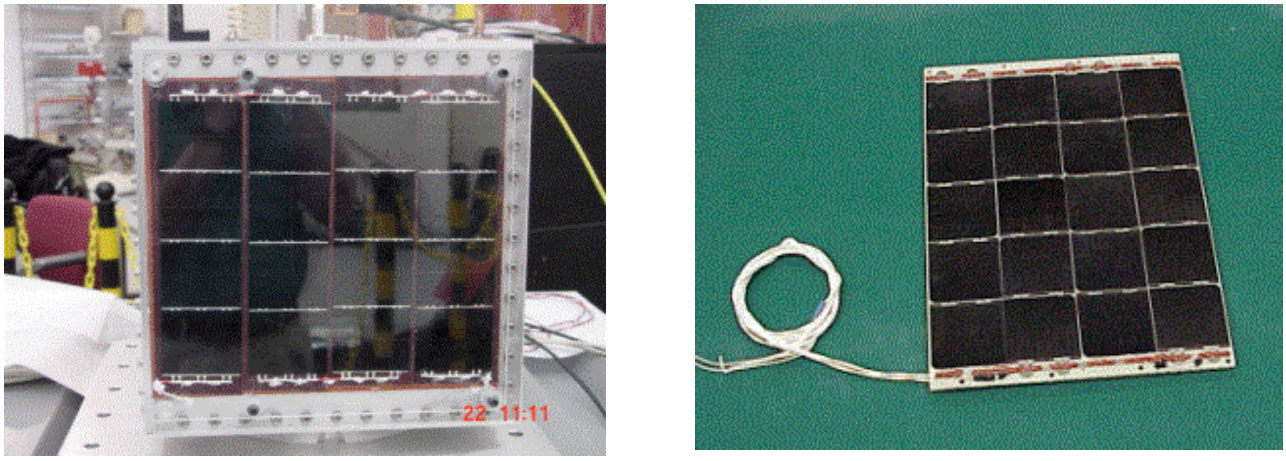

Figure 6: FS-2 will use solar panels from two different sources. A prototype USAFA-built solar panel is shown on the left. A COTS panel from Spacequest is shown on the right.

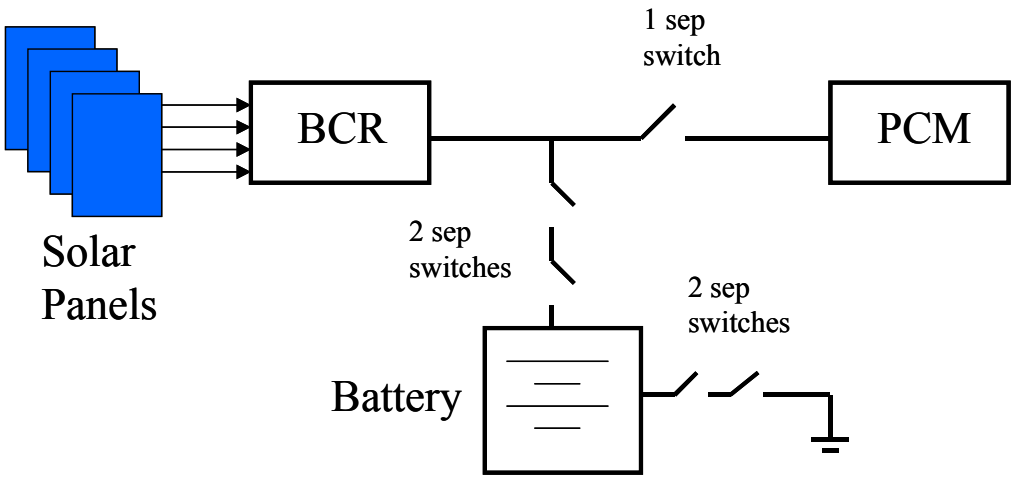

Figure 7: Battery charge-inhibit schematic.

The FS-2 BCR and PCM consist of COTS PCBs supplied by SSTL, UK. The PCBs will be housed in milled aluminum module boxes, which will be mounted to the central column walls of the spacecraft. The BCRs provide hardware-controlled maximum power point tracking of the solar arrays via thermistors mounted on each panel. The PCM provides a regulated 5 V current line and an unregulated line at battery voltage (nominally 8.4 V) and includes switches to turn subsystems on/off. Telemetry and commanding of the BCR and PCM is provided via both a control area network (CAN) node as well as through the onboard computer.

Command and Data Handling Subsystem

The FS-2 spacecraft effectively has two independent data handling systems. The default system relies on the CAN. Each subsystem and payload has a unique CAN address. The CAN system offers rudimentary built-in telemetry and commanding ability. In addition, a high speed onboard computer

(OBC) based on the StrongArm SA1100 processor provides more sophisticated telemetry and commanding capability as well as dedicated support for specific payload data collection requirements. MESA payload interface to both the CAN and the OBC will be through a dedicated System Integration Module (SIM). Both the OBC and SIM will be purchased from SSTL as COTS PCBs housed in SSTL-standard 6.5 x 4.8 x 0.82 inch aluminum module boxes (one box each for OBC and SIM). Detailed descriptions of key data handling subsystem features are provided below.

Control Area Network

The CAN system offers rudimentary built-in telemetry and commanding ability. Each subsystem and payload has a unique CAN address (EPS, TX, RX, OBC and SIM). The CAN node controller is a MPC5210 microcontroller with serial links to the OBC. The CAN interface conforms to the CAN 2.0A active and 2.0B passive standards. The bit timing on the CAN bus is 2.6 μs (or 388 kbps). The CAN network is daisy-chained through each subsystem module. Each end of the CAN network is terminated with a 120 Ω resistor.

Onboard Computer

The FS-2 OBC will be based on the high performance StrongArm processor. This processor was chosen because it combines high-speed reduced instruction set computer (RISC) with low power (up to 220 million instructions per second (MIPS) @ 190 MHz). The StrongArm processor provides interfaces to static, FLASH, and read-only memories (ROM), power and memory management, integrated clock generation, an on-board real-time clock, an interrupt controller, asynchronous communication ports, and general purpose input/output. The block diagram for the FS-2 OBC is shown in Figure 8. The OBC has a watchdog timer, 1 Mbyte of flash memory, 4 Mbytes of error detection and correction (EDAC) protected random access memory (RAM), an asynchronous Universal Asynchronous Receiver Transmitter (UART) communication link, an interface to a CAN bus, and a synchronous High-level Data Link Controller (HDLC) link.

Key features of the FS-2 OBC include:

- Strong Arm SA1100 Processor
  - High performance RISC processor: up to 220 MIPS @ 190 MHz
  - Low power: 230 mW @ 1.5 V/133 MHz
  - Power management: normal, idle, and sleep modes
  - Low voltage: 3.3 V/1.8 V
- Low power: 350 mW @ 1.5 V/3.3 V/5 V/88 MHz
- 1Mx16 FLASH memory
- 4Mx8 EDAC protected program memory
- WATCHDOG Timer
- CAN bus
- Asynchronous communication link, (uplink at 9.6k baud / downlink at 38.4k baud)
- Synchronous communication link, programmable in a FPGA
- PCB size: 100 mm x 160 mm, populated on both sides

The SNAP OBC is designed around the SA1100-EA microprocessor capable of operating at frequencies up to 190 MHz. The CPU clock can be provided by an external clock circuit or by connecting the SA1100 clock inputs with two external crystals of 3.68 MHz and 32.8 kHz. The latter method was chosen. An internal phase-lock loop generates the required internal clock frequency from the 3.68 MHz crystal while the 32.8 kHz crystal is used as a timebase for the real-time clock. To improve stability two 33 pF capacitors connect the 3.68 MHz crystal to ground.

Software

Software control of the FS-2 spacecraft via the OBC will accomplished using a single, compiled program written in ASCII standard C. Primary software tasks include:

- MESA sensor control and data gathering
- Orbit propagation for timing of onboard commanded events
- Telemetry collection, real-time downlink and storage
- High-speed automatic data download

Operationally, all mission software will be uplinked as part of spacecraft commissioning. Implementation of initial mission software in the OBC flash memory is under investigation as of this writing.

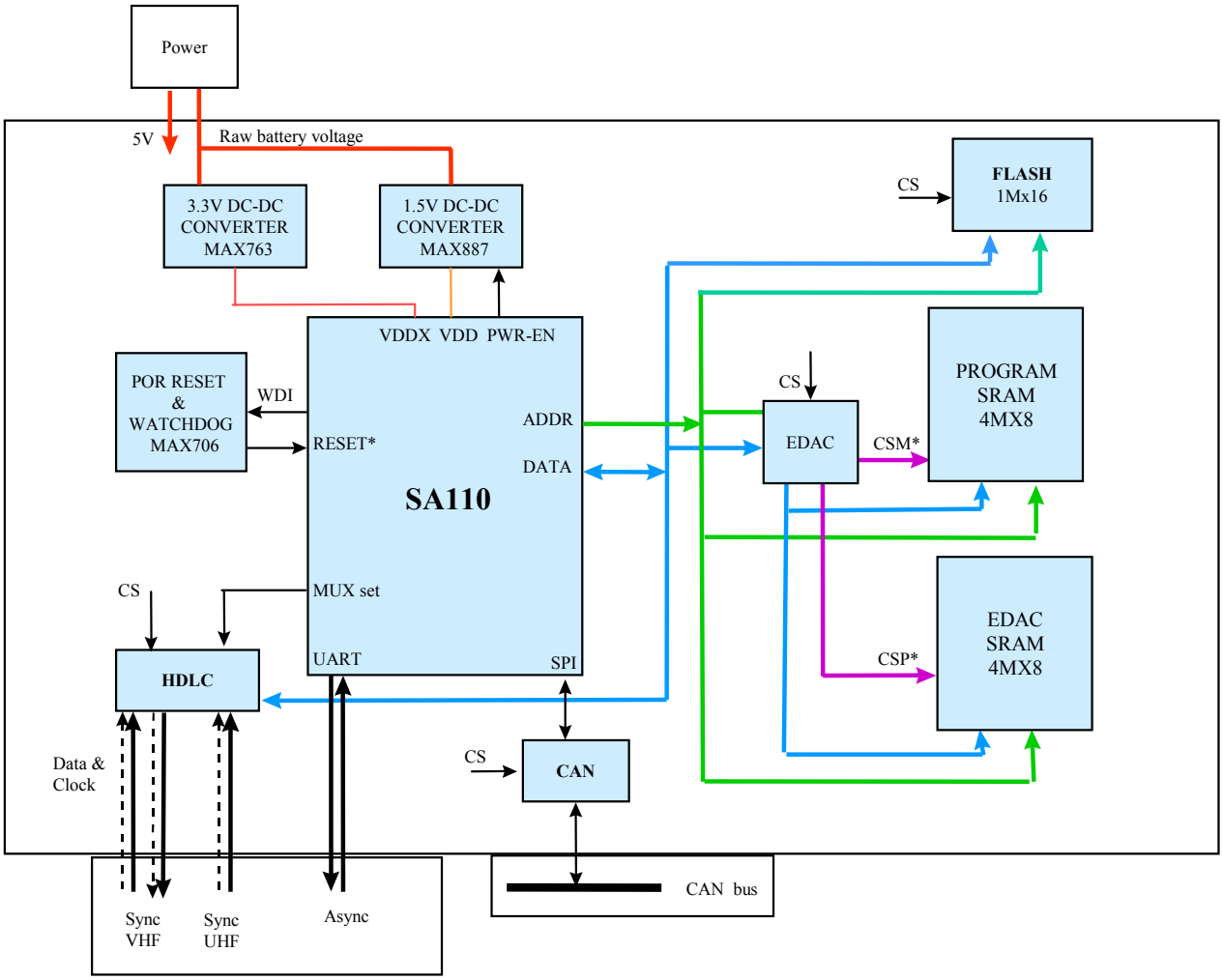

Figure 8: Functional block diagram for the FS-2 onboard computer subsystem.

Subsystem Integration Module (SIM)

The SIM provides primary data interface between the MESA payload and the spacecraft bus. The SIM has two connectors, a D-9 for power and CAN bus connections and a D-44 high density for payload connections. The signals provided on the payload connector include:

- Eight analog inputs (range 0 - 4.1 V) sampled using a ten bit A/D converter
- Eight analog outputs (range 0 to 4.1 V) generated with eight bit D/A converters
- Sixteen bi-directional digital lines (open drain)
- Asynchronous serial port (TTL signaling)
- Analogue reference voltage (4.1 V)
- Power supplies (5 V and Vbatt) (not used for this mission)

A functional block diagram for the SIM is shown in Figure 9.

Communication Subsystems

The FS-2 communication subsystems consist of an S-band transmitter and a VHF receiver. Both subsystems will be purchased from SSTL as COTS PCBs housed in SSTL-standard 6.5 x 4.8 x 0.82 inch aluminum module boxes (one box each for the TX and RX). Detailed descriptions of each subsystem are provided below.

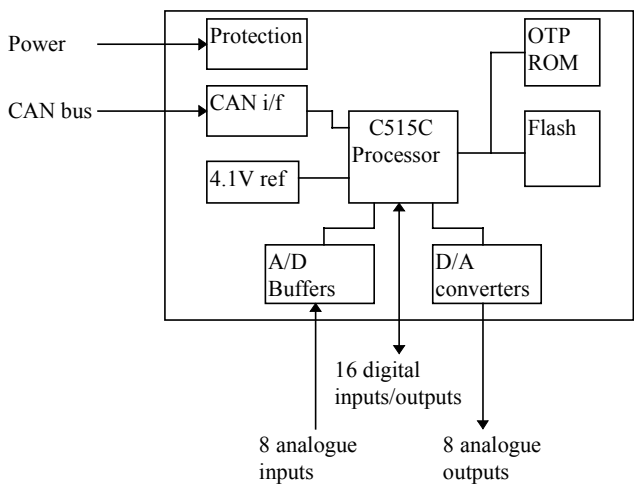

Figure 9: Block diagram of the FS-2 SIM.

S-band transmitter

The S-band transmitter will operate at a nominal frequency of 2220.0 MHz at an output power of 500 mW. Power consumption is approximately 4.9 W when the two RF2126 amplifiers are on and 1.5 W when they are powered down. The single S-band ground plane antenna is mounted to the outside top wall of the spacecraft structure and has approximate dimensions of approximately 6 inches in height and 2.2 inches in maximum diameter. Figure 10 shows the S-band antenna mounted on FS-2. The TX employs a CAN controller and interface, and data are sent to the transmitter via the CAN bus or direct from the OBC via the D44 connector. The Downlink modulation scheme will use binary phase shift keying (BPSK) at 38.4k bps at 2.22 GHz.

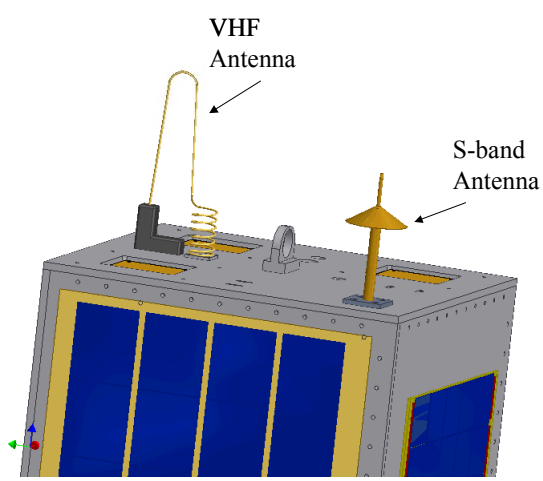

Figure 10: The FS-2 VHF and S-band antennas.

A functional block diagram for the S-band TX is shown in Figure 11. Key features of the TX include:

- 38.4k bps @ 2.22 GHz
- BPSK
- 500 mW output power
- CAN Bus interface
- PCB size: 100 mm x 160 mm

With the doors closed, the five inhibits prevent battery power from being inadvertently applied to the TX. Only one of these inhibits prevents the TX from being powered direct from the solar panels. However, with the payload bay doors closed, even if the PES container door were open, there would be no sunlight available to power the spacecraft bus directly.

VHF Receiver

A regulated 5 V bus power line powers the VHF Receiver module, and the RX section itself runs off an internally regulated 4 V line. The power consumption is approximately 400 mW. A coil/loop VHF monopole whip antenna will be used, mounted on the outside top wall of the spacecraft as shown in Figure 10. The VHF antenna extends approximately 8 inches above the spacecraft surface. The front end of the RX consists of a low-pass filter (LPF), a 20 MHz band-pass filter (BPF) and a low-noise amplifier (LNA) circuit. The RX employs a CAN controller and interface, and recovered data can be distributed via the CAN bus or direct to the OBC via the D44 connector. The uplink modulation scheme used is 9600 bps frequency shift keying (FSK) at 148.015 MHz.

Key features of the FS-2 RX include:

- 9k6 bps FSK @ 148.015 MHz
- Low power: 400 mW @ 5 V
- 1st intermediate frequency (IF): 21.4 MHz with matched pair of filters
- CAN Bus interface
- Board size: 100 mm x 160 mm
- Voltage buffered receiver signal strength indicator: 70 dB usable range
- Local Oscillator (L.O.) suppression: 40 – 60 dB

A functional block diagram for the FS-2 RX is shown in Figure 12.

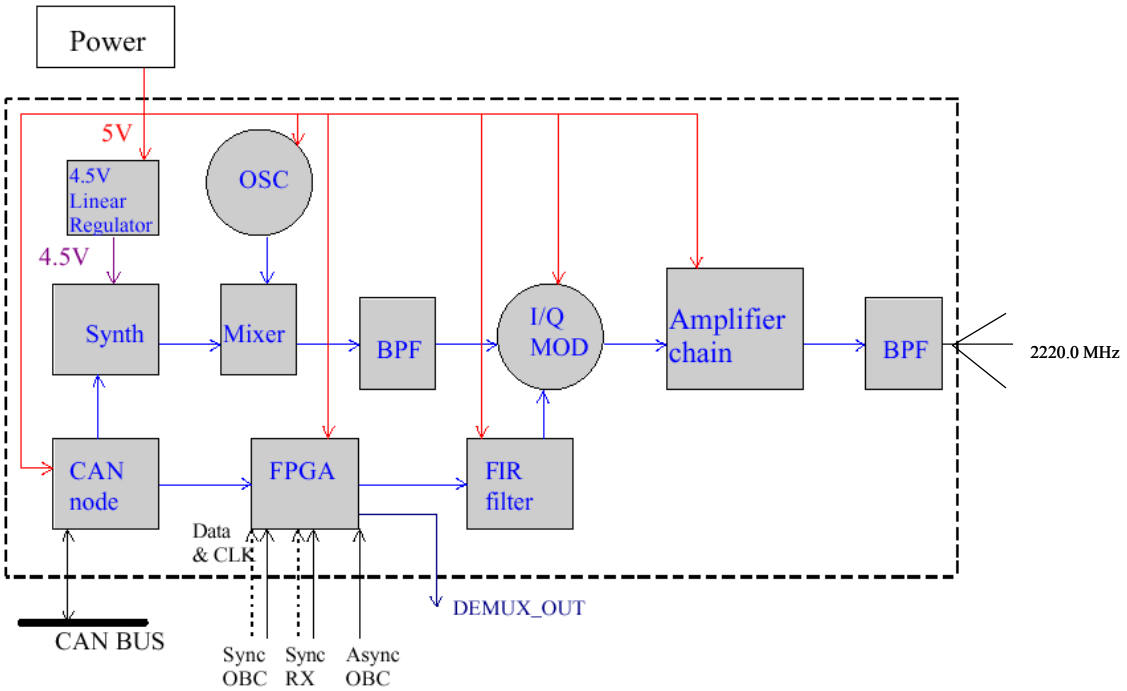

Figure 11: Functional block diagram for the FS-2 S-band transmitter subsystem.

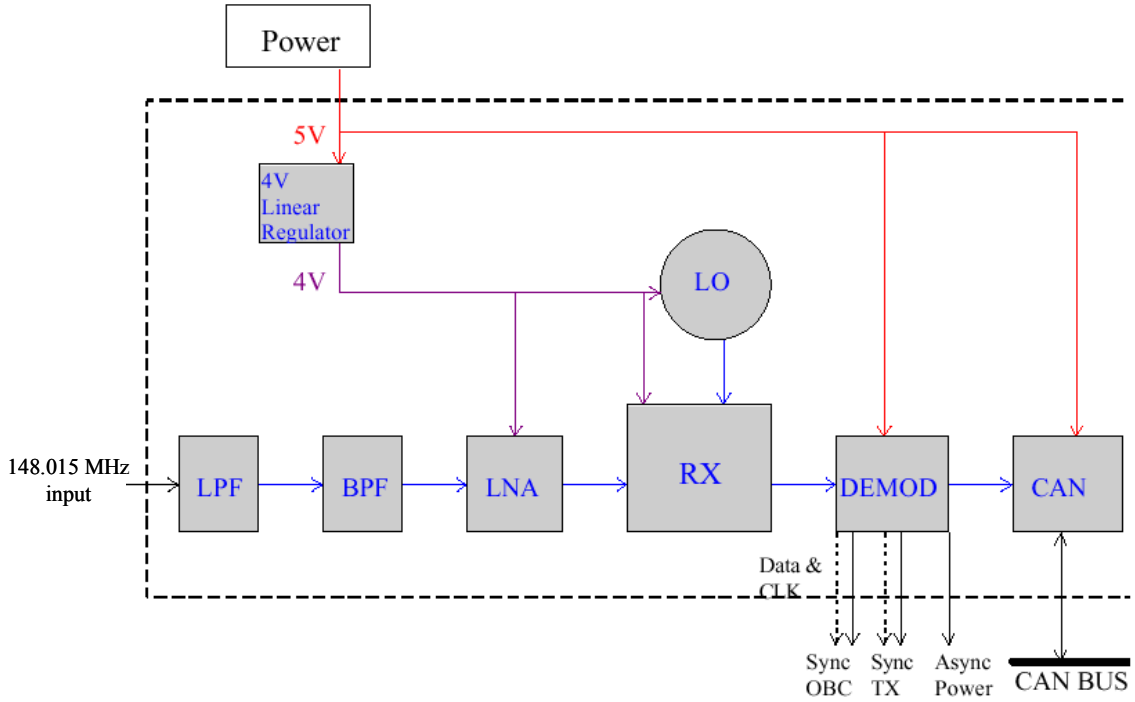

Figure 12: Functional block diagram for the FS-2 VHF receiver.

Thermal Control

Based on preliminary thermal analysis and results from thermal/vacuum testing of the FS-2 Engineering Model, passive thermal control, consisting of various thermal tapes and coatings, should be sufficient to maintain the spacecraft at operational temperatures throughout the mission. Detailed thermal analysis will be conducted using the SINDA Thermal Analysis package and results coordinated with GSFC.

Attitude Determination & Control (ADCS)

FS-2 will use a combination of Earth/Sun sensors and solar panel current to determine spacecraft attitude. One Earth/Sun sensors will be mounted on the outside top wall of the spacecraft on the same face as the VHF antenna pointed in the spacecraft +Z body direction. (Refer to Figure 13 for the FS-2 body axis coordinate system. Note the Earth/sun sensor is not shown on this drawing.) The second Earth/Sun sensor will be mounted on the outside of the base plate pointed in the –Z body direction. Each sensor will use as single photo-diode at the end of a short, darkened aluminum tube giving an effective field of view of approximately 100°. Spacecraft attitude will be determined *a priori* using ground processing of telemetry.

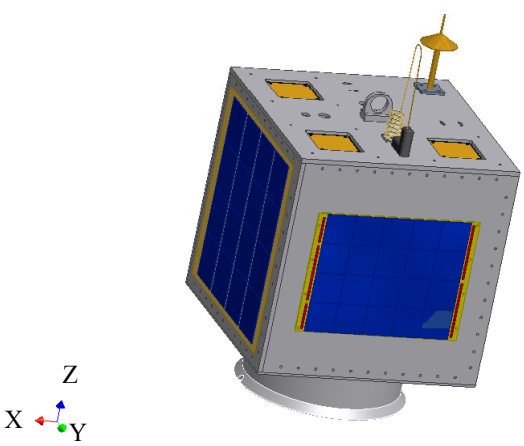

Figure 13: View of FalconSAT-2 showing the body axis coordinate system. +Z is out the top plate of the spacecraft. –Z is out through the interface ring.

Passive attitude control will be achieved through a combination of solar-pressure spin tapes and hysteresis rods. The spin tapes will provide both passive thermal control, and provide areas of high or low solar absorptivity. This differential absorptivity is predicted to be sufficient for solar pressure to induce a slight spin around an axis in the X-Y plane. To dampen this induced angular acceleration, five hysteresis rods will be mounted in the X-Y plane on the inside of the central structural column. Hysteresis rods possess virtually no inherent magnetic field (much less than the inherent field of the structure itself); however, an extremely small field is induced in the rods as they are rotated through the Earth's magnetic field. This induced field is predicted to be sufficient to dampen the effect of solar torque, allowing the spacecraft to be in a gentle tumble around an axis in the X-Y plane. This attitude ensure the spacecraft does not become inertial locked in an unfavorable attitude such that the solar panels are not pointed at the sun for at least part of each orbit.

FalconSat-2 Mission Status

USAFA's FalconSat-2 team is progressing with the mission development with the intention to launch early in the 2003 calendar year. At the time of the writing of this paper, the team is in the process of preparing the Phase 0/1 Flight Safety Data Package required by NASA for launch via the PES. To date, we have completed an internal preliminary design review and the assembly and testing of the Engineering Model (EM). Insight gained from subjecting the EM to environmental testing (thermal vacuum, sine burst, random vibe) will be used when completing the final design early in the upcoming fall semester. We will produce the Qualification and Flight Models (QM and FM) by the end of the upcoming fall and spring semesters, respectively. Targeting a 3rd quarter 2002 hardware delivery date, during 2nd quarter 2002 we will complete environmental testing of the QM and FM to qualification and acceptance levels, respectively.

Concluding Remarks

While positive progress on the systems engineering side of the problem is important, the most critical measure of program success is how well the program achieves its academic goals. The basic philosophy that initiated the Academy's small satellite program in the first place was a belief that students learn far more by building, testing and doing than by lectures and exams. While always

difficult to assess the long-term efficiency of any curriculum changes, initial student feedback is extremely positive. Students have responded well to a class requiring them to produce solutions to real-world problems.

An initial concern of going to purely design-based classes as opposed to additional lectures was the potential to de-emphasize depth of material in favor of breadth. However, we've observed that this has not been the case. Each student has a particular subsystem specialty that requires far more depth than a survey course would expose them to. Furthermore, they receive a broad appreciation for how their subsystem fits into the overall design picture. To a large extent, the jury is still out on the overall success of the program. The most important measure is how well this program prepares cadets for their jobs as engineers, scientists, pilots, and program managers in the Air Force. It will be several years before this long-term feedback can be received and assessed. However, one recent student's feedback provides significant encouragement that the program is on the right path.

> "The FalconSat program has allowed me to apply the knowledge from traditional classroom courses in a way that ordinary projects and paper designs cannot. I have learned more about leadership, management, and the systems engineering process than could ever be learned in the classroom."
>
> *-USAF Academy SmallSat student*

With this type of encouraging feedback, the program is continuing to evolve and expand to meet the needs of an increasingly technical and space-orientated Air Force.

Acknowledgements

The authors would like to thank the USAFA FalconSat-2 cadet team members for their diligence, creativity, enthusiasm, and commitment to this mission. We also extend their gratitude to the USAF Office of Scientific Research, DoD Space Test Program, and the USAFA Association of Graduates for their continuing support of this program.

References

[1] R. Humble, "FalconGold Program Mission Overview," USAFA Website: www.usafa.af.mil/dfas/research/falcongold/falcongold.html, 1998.

[2] W. Herman Steyn and Yoshi Hashida, An Attitude Control System and Commissioning Results of the SNAP Nanosatellite, *14th Annual AIAA/Utah State University Conference on Small Satellites*, August 21-24, 2000.

[3] Huba, J.D.; Joyce, G.; Fedder, J.A., Formation of an electron hole in the topside equatorial ionosphere, *Geophys. Res. Letters*, *v27*, n2, p 181-184, 2000.