YamSat: the First Picosatellite being Developed in Taiwan

Albert Lin[1], Dr. Chih-Li Chang[2] , Steven Tsai[3], Joe Fong[4],
Chan-Peng Chang[5] , Robin Lin[6], Chin Wen Liu[7], Marco Yeh[8], Dr. M.H. Chung[9], Hsu-Pin. Pan[10]
National Space Program Office, Taiwan, R.O.C. http://www.nspo.gov.tw/

Chi-Hung Hwang[11]
Precision Instrument Development Center Remote Sensing Lab, Taiwan, R.O.C. http://www.pidc.gov.tw/

Abstract: This paper describes the current planning and design of the YamSat, the first picosatellite being developed in Taiwan. The design, analysis, manufacture, integration, test and operation of the YamSat will be performed by the National Space Program Office (NSPO), Taiwan, R.O.C, in cooperation with other domestic organizations and companies. It is a member of the CubeSat [1], 10cm x 10cm x 10cm size and within 1kg mass. The major objective of the YamSat is to qualify in space the components and technology developed in Taiwan, including a micro-spectrometer payload using Micro Electro Mechanical Systems (MEMS) technology. The YamSat will be ready for flight in the middle of 2002.

TABLE OF CONTENTS

1 – INTRODUCTION
2 – NSPO SATELLITE PROGRAMS
3 – YAMSAT PROGRAM OVERVIEW
4 – YAMSAT DESIGN & ANALYSIS
5 – CONCLUSIONS
6 – ACKNOWLEDGEMENTS

(Keyword: Picosatellite, CubeSat, YamSat, MEMS, MNT, NSPO)

1. INTRODUCTION

As the rapid development of advance micro/nano technologies (MNT), the size reduction of the photonics, mechanics, and electronics devices by an order of magnitude becomes a trend in recent years [2]. So is the spacecraft size. The spacecraft now serves as a fast follower of the MNT or MEMS technology. The development of picosatellite since 1996 provides new academic, educational, and low-cost space research experimentation. In February, 2000, the Stanford University OPAL microsatellite successfully deployed Aerospace Picosatellites in orbit, and opened a new era of picosatellite development. Currently a new generation of picosatellite called CubeSat is being developed by a number of universities and organizations to expedite new platform for space experiment at low cost.

The YamSat is a picosatellite of CubeSat class and was originally a training project in the "Spacecraft System Design" course taught by Professor J. N. Juang in the spring of 2001. The course is the first long distance teaching on satellite development via the multi-media network system of the National Center for High-Performance Computing in Taiwan [3]. In accordance with the trend toward smaller satellites, the YamSat program is being developed at NSPO following the end of class.

2. NSPO SATELLITE PROGRAMS

The National Space Program Office (NSPO), under the National Science Council (NSC) of the Executive Yuan in Taiwan, R.O.C. , was established in 1991. The NSPO missions are as follows:

- To plan, coordinate, and promote the satellite programs under the national space policy.
- To execute national space programs.
- To coordinate with the academic and industrial communities in Taiwan.
- To develop products and systems related to space science and technology.
- To promote international cooperation.

The main objective of the national space program in Taiwan is to establish the full development capability for small satellites. This task is jointly undertaken as follows:

1-Program Manager, e-mail: albert_lin@nspo.gov.tw; 2-System Engineer; 3-EE Section Manager; 4-I&T Section Manager; 5-Structure Engineer; 6-Power Engineer, 7- Communication Engineer, 8-Software Engineer, 9-Thermal Engineer, 10-I&T Engineer, 11-Payload Engineer

(1)NSPO - To establish, through international cooperation, the capability of system engineering, system/subsystem design, system integration and testing, and mission operation.

(2)Domestic industry - To establish the capability to produce space-qualified components and subsystems.

(3)Academia - To engage in the space research and to participate in the design and development of high precision electro-optic sensors and other payloads.

(4)Other research agencies, (e.g. ITRI [4], PIDC, etc.) - to assist in key components and technology development .

To achieve the organization mission and program objectives, the development strategies of current NSPO's space programs, i.e. ROCSAT-1, 2, 3 and YamSat program, are as follows:

(l)ROCSAT-1: Establish the infrastructure and satellite system engineering capabilities through international cooperation and technology transfer.

(2)ROCSAT-2: Build up the capabilities for satellite system and subsystem design by taking aggressive role in joint development with the contractors. Remote-sensing application technology is also emphasized.

(3)ROCSAT-3: Develop total program capability, including program planning, program execution, components procurement, system integration and testing. Development of satellite constellation technology is also emphasized.

(4)Yamat: Develop a new low-cost, short scheduling, quick turn-around program capability, including conceptual feasibility study, program planning, program execution, components procurement, system design and development, manufacture, assembly, integration, testing, ground station build-up and mission operation. Research and development of MST/MEMS technology is also emphasized.

3. YAMSAT PROGRAM OVERVIEW

The YamSat Program was started in April 2001. The YamSat is planned to be ready for shipment in June 2002, after a 15-month development duration, based on the target launch time in November 2001 . The development schedule is as Table 1. The three objectives of the YamSat are "YAM". Letter "Y" represents for a vital and native yam which is like the shape of the Taiwan Island. The program provides opportunities of space qualification for the domestic components. For example, the silicon solar cells are the product of the Shihlin Electric & Engineering Corp. [5] and the solar panels will be assembled by Shihlin. The rechargeable battery is sponsored by the E-One Moli Energy Co. [6] The 80C52 controller is the industrial product of the Winbond Co.[7] Letter "A" represents for the amateur radio UHF/VHF communication which will be used in the program. The Taiwan Amateur Satellite Association (TAMSAT) provides the technology support on the TT&C subsystem and the amateur communication application. The Aerospace Science and Technology Research Center (ASTRC) of the National Cheng Kung University is involved in the development of the amateur communication ground station, the mission operation and the onboard antenna deployment mechanism under the leading of Prof. J. J. Miau. The communication users will be the worldwide amateur users. Letter "M" represents the micro-spectrometer payload and micro electro-mechanical systems (MEMS) technology. The micro-spectrometer is developed by the Precision Instrument Development Center Remote Sensing Lab (PIDC). Its diffraction device is based on the MEMS technology.

Table 1. YamSat Development Schedule

Stages	Period	Duration
1.Work Starting Date	2001/04	
2.Mission Analysis and System Design	2001/04~2001/05	1.5 months
3.Preliminary Design	2001/05~2001/06	1.5 months
4.Critical Design	2001/07~2001/09	3 months
5.Flight Units Manufacture	2001/10~2002/02	5 months
6.Satellite Integration and Test	2002/03~2002/06	4 months
7.Ready for Shipment	2002/06	Total 15 months

The YamSat is a CubeSat with weight within 1 kg and size of 10cm x 10cm x 10cm and is fit for the P-POD launcher [9]. The target of mission life is 1 month and the design life is 2 months. The total dose is within 1k rad (Si) in one month under the shielding using 1mm thickness of aluminum side panels. The orbit is 650km altitude, 65 deg inclination, based on

the planned CubeSats launch in 2001. There will be 14 or 15 revolutions per day and four contacts with Taiwanese ground station. Total contact time is between 400~800 sec and average contact time is 10 minutes. NSPO will has its own amateur ground station for mission operation.

4. YAMSAT DESIGN & ANALYSIS

The YamSat satellite are divided into seven subsystems – Structure, Payload, Command & Data Handling (C&DH), Tracking, Telemetry & Command (TT&C), Electrical Power, Attitude Determination and Control, Thermal Control and Flight Software. The design and analysis of each subsystem are described in the following sections.

Structure

The CubeSat size is 10cm X 10cm X 10cm. The total mass of the standard CubeSat will not exceed 1 kg. The CubeSat Center of Gravity (CG) is located within 2 cm of the geometric center of the CubeSat, and the actual location of the CG is known to within 5 mm accuracy. A kill switch (micro switch) is mounted to the exterior of the YamSat to turn off all power when the YamSat is compressed in the P-POD. The mechanism of the antenna deployment function is under development. All CubeSat shells are constructed of 7075 aluminum to avoid thermal mismatch between the P-POD deployer and YamSat. A deployed diagram of the structure is shown in Figure 1. All electrical components are mounted on the side panels. On the +Z panel, the center hole is for the lens of the micro-spectrometer. The other two holes are for flight jumpers and electrical test port.

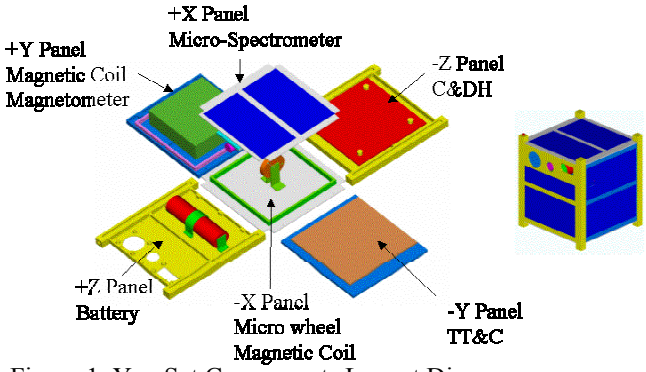

Figure 1. YamSat Components Layout Diagram

Payload – Micro-spectrometer

The micro-spectrometer is used to observe the scatting spectrum from atmosphere and spectrum of sun. The goal of the micro-spectrometer is to demonstrate the engineering feasibility of using an optical system as a CubeSat payload. The MEMS technology is used to meet the mass and power requirements. The functional block diagram of the micro-spectrometer is shown as Figure 4. All electronic components and opto-mechanics parts are fitted onto one 8cm x 8cm circuit board. A mini-aperture lens with F-number 2 is mounted on the +Z axis panel to collect the light. For severe environment consideration, quartz made lens and optical fiber are selected. The collected light is guided to a CMOS detector through the diffraction device by 30 cm optical fiber. The optical fiber is used as a light guider and the slit of spectrometer. The diffraction device is made by LIGA technology. The light is separated by the diffraction device and projected to a CMOS detector with 256 pixels. The LED is used for self test purpose. The detection spectrum range is within 380 nm - 780 nm. The spectrum resolution is 12 nm. The generation rate of science data is set to 512 bytes/min. The PIC16F87X is used as the controller. The science data and status of health data are transmitted to the main on-board controller via UART interface at rate of 1200 bps.

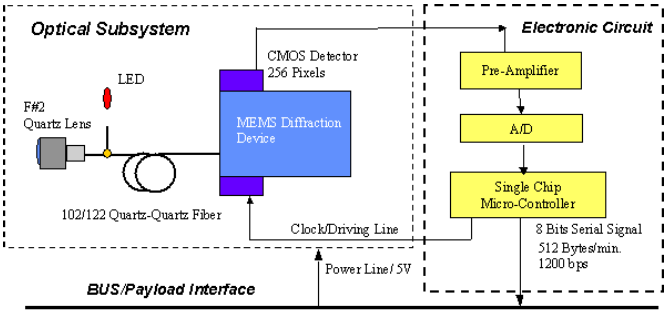

Figure 2. Micro-Spectrometer Functional Block Diagram

Command & Data Handling (C&DH) Subsystem

The YamSat electrical block diagram is as Figure 3. A domestic 80C52 micro-controller, Winbond's W77IE58, is chosen as the main on-board controller. It's an industrial part and the operation

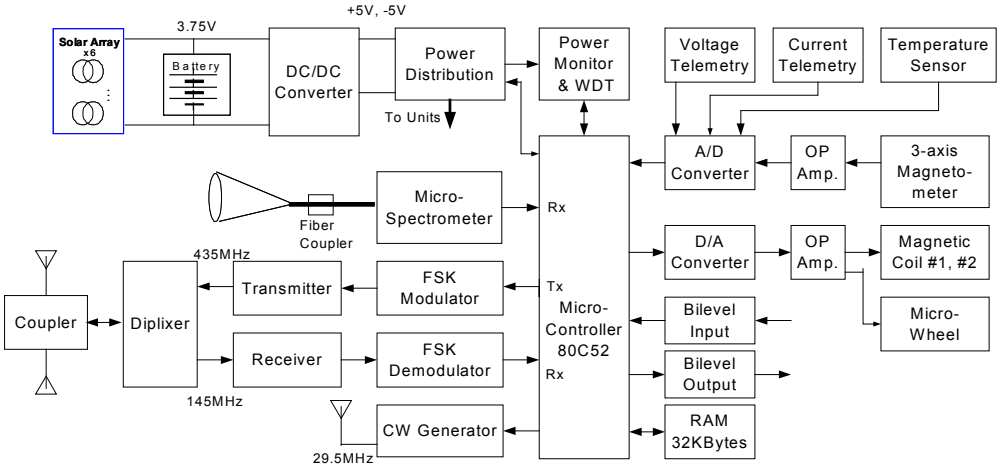

Figure 3. YamSat Electrical Block Diagram

temperature range is –40 °C to +85 °C. There is a 32k bytes internal flash ROM for the flight software. One 32K bytes SRAM chip, Winbond W24258, is used for the storage of the Status Of Health (SOH) data, science data and amateur communication message. The W77IE58 provides two sets of serial ports. One is used for telecommand and telemetry interface with TT&C subsystem. The other is used for science data path with the micro- spectrometer. The external power monitor and watchdog timer chip, MAX685/SO, is used for safeguard purpose. There are three analog inputs from the 3-axis magnetometers, APL Model 113. There are two analog outputs for the magnetic coils to generate the magnetic torque. There is one analog output for the micro-wheel to generate the required momentum bias for B-dot control algorithm. There are 8 bilevel commands to control the unit on/off and 8 bilevel telemetry to get the status of the units.

Tracking, Telemetry & Command (TT&C) Subsystem

The Spacecraft will provide telecommand link margins of 6 dB at a BER of 1x10-6 and a data rate of 1200bps via FSK VHF band □145MHz□over 85% of a sphere centered at the Spacecraft. The Spacecraft will provide telemetry link margins of 6 dB at a BER of 1x10-6 and a data rate of 1200 bps via FSK UHF band (435MHz) over 85% of a sphere centered at the Spacecraft. The Spacecraft will be designed to downlink science data, Status of Health (SOH) data and amateur communication message data via UHF downlink communications. The telecommand and telemetry format shall follow AX.25 protocol and be compatible with the NSPO amateur ground station. Two commercial omni pole antennas with 2.15 dBi gain for amateur radio communication will be used. The antenna length is 17cm for each. The transmitter output power is 0.5W. The receiver sensitivity is -140dBm. The NSPO amateur ground station will use two YAGI antennas for VHF/UHF communication with 17dBi-antenna gain and 2W-transmitter power. There will be an 8 dB margin for downlink and a 27dB margin for uplink. The continuous wave (CW) circuit will generate tracking beacon and SOH data under the control of the on-board controller. The CW frequency is 29.5MHz and the power output is 0.1W.

Electrical Power Subsystem (EPS)

The primary power is provided by solar energy. Five panels will be mounted with high efficiency (26%) GaAs solar cells. One panel will be mounted with Si solar cells from domestic vendor, the Shihlin Electric & Engineering Corp, for space qualification. The rechargeable battery will be used to store solar energy and provide energy for peak power demands and eclipse periods. One lithium-ion battery, ICR18650F, from the domestic vendor, E-One Moli Energy Co., is planned to be used for space

qualification. ICR18650F has high capacity and low weight. The major specifications are: Normal Voltage: 3.75V; 4.2V while 100% charged; Capacity: 1800mA; Diameter: 18.2 mm; Height: 65 mm; Weight: 44.5 g; Life: about 500 cycles for 100% DOD. The DC-DC converter is used to provide 5V and –5V to the main electrical components. Considering the Beta angle and temperature factor, the basic power consumption is set at 0.9W. When all component are ON, the total power consumption is 4W.

There are five power usage modes as follows.

(1) Launch Mode: During the launch, the battery and the solar arrays are disconnected from the satellite power bus by the kill switch. No power consumption.

(2) Safe Mode: After separation, the battery and the solar arrays are connected to the satellite power bus. The On-Board Controller circuit (8052, RAM, AD/DA..), the CW Generator and the Receiver are ON.

(3) Communication Mode: The transmitter is turned ON by uplink telecommand, then the SOH and science data are downlinked during 10 minutes contact time. After that, The transmitter is turned off by stored commands.

(4) Imaging Mode: The Micro-Spectrometer is turned ON by uplink telecommand during the sun light. The duration is with 20 min.

(5) Attitude Control Mode: The magnetometer and magnetic coils are turned ON by uplink telecommand to stabilize the satellite. The micro-wheel is also turned ON by uplink telecommand to perform B-dot control.

Attitude Determination and Control Subsystem (ADCS)

The attitude determination is performed via one 3-axis magnetometer, APL Model 113. The attitude control is performed by 2 magnetic coils and 1 micro-wheel based on the B-dot control algorithm. A software simulator is used to simulate the dynamic response of the satellite attitude. The design of the system is validated and modified before hardware implementation by using a simulator. The simulator is composed of external disturbances model, spacecraft bus, sensors, actuators and control law. The external disturbance sources include gravity-gradient torque, aerodynamic torque, solar-radiation torque and earth-magnetic torque. The gravity-gradient torque is very small for a typical CubeSat. Assuming that the center of gravity offset is 0.01 m for each axis and the atmospheric density is 6.0×10^{-14} kg/m3 at 650 km altitude, the maximum value of the aerodynamic torque will be 8.7×10^{-10} N-m. The solar radiation torque is a product of force arm and solar radiation force. Assuming the absorption and diffuse reflection coefficient are 0.72 and 1.0 respectively, the maximum value of the solar radiation torque is 1.2×10^{-9} N-m. Assuming residual magnetic dipole is 0.001 Am^2 ,the maximum value of the residual magnetic torque is 6.8×10^{-8} N-m for each axis. Assuming the moment of inertia are Ixx = 0.00133, Iyy = 0.002, Izz = 0.00133 , Ixy = Iyz=Izx = 0, the magnetic moment of X-axis magnetic coil and Y-axis magnetic coil is 0.05Am^2 for each, the momentum bias generated by the micro-wheel is -0.001 N-m-s in Y axis, the initial body rate is Vx=Vy=Vz=5 deg/sec, the simulation result are as Figure 4 and Figure 5. The satellite will be steady in 50 minutes and rotates at two times the orbital rate at –Y axis.

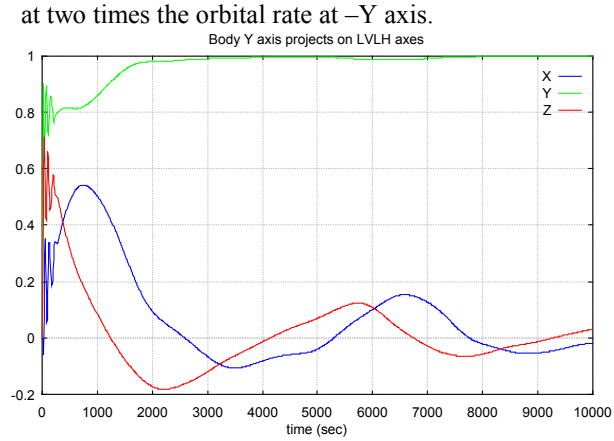

Figure 4. The Simulation Result of the Satellite Axes

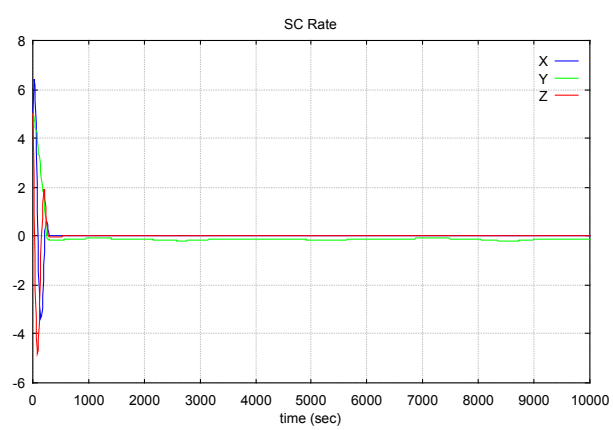

Figure 5. The Simulation Result of the Satellite Rate

Thermal Control Subsystem (TCS)

To reduce the power consumption, the thermal control will be achieved through passive elements, such as thermal blankets, insulation, and surface finishes. The thermal analysis is based on the attitude control status that the negative Y-axis spin rate is 2 revolutions per orbit. The temperature requirements for the key components are: (1) Battery: 0 to +45 °C for charge, -20 to +60 °C for discharge; (2) CPU: -40 to +85 °C; (3) Micro-Spectrometer -20 to +40 °C; (4) Magnetometer: -40 to +85 °C. The thermal isolator is introduced to connect the components to structure panels. (k_{screw} = 54 W/m-C, $k_{isolator}$ = 0.043 W/m-C). The black paint is used on all internal surfaces of side panels. There is significant conduction heat loss from components to structure panels, and it may cause some unit temperatures, especially the battery, to get lower than their allowable temperature limits. The thermal isolators were designed for screws components to structure panels in order to avoid substantial conduction heat leak. The size of thermal isolator (including thickness t, and outer diameter D1) was studied in order to make battery worst cold case temperatures (Beta angle= 0 deg) higher than its lower limit, i.e., 5 deg C. The sizes of t = 1 mm and D1 = 5 mm were suggested from the analysis results. The simulation result of the battery orbital temperature is as Figure 6. The temperature simulation result is listed in Table 2 and meets the unit temperature requirement.

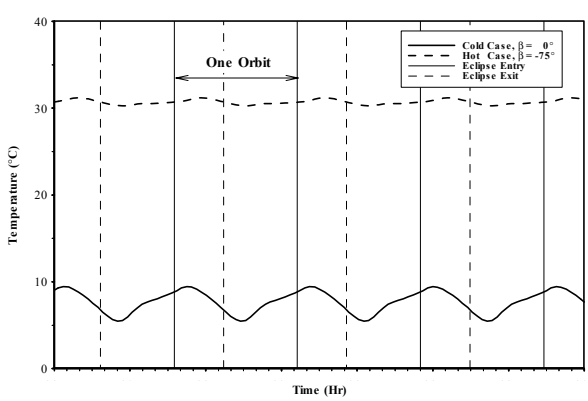

Figure 6. The simulation result of the battery orbital temperature

Table 2. The Temperature Simulation Result

	T_{min} (°C)	T_{max} (°C)
+Z Panel	-33.0 (β = 0°)	52.7 (β = -25°)
-Y Panel	-28.4 (β = 0°)	58.8 (β = 75°)
+X Panel	-26.3 (β = 0°)	56.5 (β = -25°)
+Y Panel	-30.1 (β = 0°)	58.0 (β = -75°)
-X Panel	-31.4 (β = 0°)	61.6 (β = -25°)
-Z Panel	-25.5 (β = 0°)	61.0 (β = -25°)
Battery	5.5 (β = 0°)	31.2 (β = -75°)
C&DH	4.6 (β = 0°)	42.0 (β = 50°)
Payload	0.8 (β = 0°)	33.2 (β = -50°)
TT&C	14.3(β = 0°)	42.5 (β = -50°)
Micro Wheel	30.5 (β = 0°)	54.4 (β = -50°)

Flight Software Subsystem (FSW)

The flight software is responsible for providing the on orbit computational, command and communication capability in support of the spacecraft subsystems and payload instruments. The flight software consists of the following functions: executive, ADCS, Command & Telemetry, EPS and payload control. The Executive function performs the S/C processor startup and hardware initialization, task scheduling and clock updates. It also provides mathematics routines and implements the communications protocol to transfer serial data. The ADCS function processes sensor data, executes the attitude control and attitude reference logic, and outputs commands to the actuators. The EPS function performs the battery state of charge monitoring and control. The command function receives and verifies the uplink commands, executes the spacecraft bus commands. The telemetry function collects satellite state of health data, formats the data into the proper telemetry format and stores them in mass storage unit, then transmitting them to the ground. The payload control function performs payload switching and collects telemetry data from the payload. The executive will be based on the RTX-51 RTOS (Real-Time Operating System) that is a dedicated multi-tasking kernel. The dynamic architecture of the flight software is based on a minimum set of tasks, mostly cyclic. The basic real-time cycle is set to 1Hz, enabling to perform ADCS algorithms, EPS

algorithms, Command & Telemetry Processing and Payload control within the same cyclical task.

Integration & Test Plan

The satellite will be integrated in the NSPO I&T facility. The vibration test, mass property test, comprehensive performance test, radiation test, EMI/EMC test, thermal vacuum/cycle test and end-to-end test are the major test items. There is one EMI/EMC anechoic chamber in NSPO supporting the antenna pattern measurement test (as Figure 7) and the satellite EMI/EMC test. There is a small thermal vacuum chamber being built in the NSPO. Its size is 3m diameter and 3.5m long. The maximum weight of test target is 100kg. The vacuum compatibility is 10^{-7} mbar and the temperature control range is -173 deg C ~ +127 deg C. This small thermal vacuum chamber will be completed its final installation and acceptance in Feb 2002. The schedule can support the YamSat thermal vacuum test. For YamSat, the test condition is planned to be 10^{-5} mbar and within –40 deg C to +85 deg C.

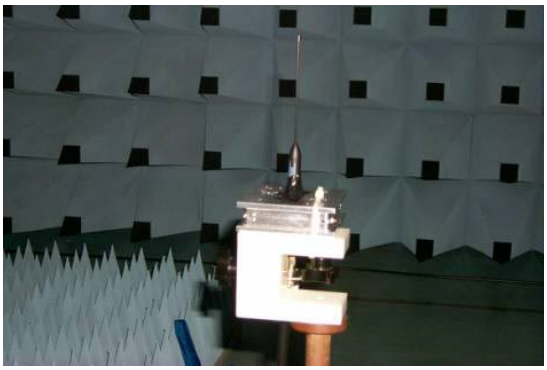

Figure 7. The Antenna Pattern Test in NSPO's EMI/EMC anechoic chamber

5. CONCLUSIONS

Aside from the satellite development experience of ROCSAT-1 , ROCSAT-2 and ROCSAT-3, the YamSat is the first satellite developed solely by NSPO engineers. The YamSat program opens a new satellite development model in NSPO: establishing and developing a new low-cost, short schedule, quick turn-around satellite program model. This model demonstrates NSPO's capabilities on conceptual feasibility study, program planning, program execution, components procurement, system design, development, manufacture, assembly, integration, testing, ground station buildup, and mission operation. The research and development of MST/MEMS technology is also emphasized in the YamSat program and will be continuously enhanced by NSPO for future picosatellite program. The YamSat will be a very good pathfinder and important milestone for the satellite development in Taiwan. The YamSat now provides a space qualification test bed for local commercial components and also provides a new generation of MEMS space test bed. The YamSat provides a low cost space experimentation and education for Taiwan universities.

6. ACKNOWLEDGMENTS

The authors would like to thank NSC for its encouragement, with special thanks to NSC vice chairman , Dr. Ching-Jyh Shieh. The authors would also like to acknowledge NSPO upper management's support. Professor J. N. Juang in the the National Center for High-Performance Computing is thanked for his lectures in the "Spacecraft System Design" class between January 17 and May 4, 2001 and the suggestions on the YamSat program development.

All the members of YamSat team on every aspect are acknowledged, to name only a few of the key members: SE: Mr. Yong-Yao Lee; SMS: Mr. M.H., Tsai; C&DH: Mr. Redman Lo; TT&C: Mr. T. L. Ni, EPS: Mr. James Yeh ; ADCS: Mr. Y.W. Jan, Mr. C.T. Lin; TCS: Mr. J.R. Tsai ; I&T: Mr. Sunny Lin, David Dai, EDM/EGSE: Mr. Allen Shie. Many thanks to local industrial provider, especially Shihlin Electrica & Engineering Corp, E-One Moli Energy Co.; Taiwan Amateur Satellite Association (TAMSAT); Precision Instrument Development Center (PIDC); and Aerospace Science and Technology Research Center (ASTRC).

REFERENCES

[1] Hank Heidt, Jordi Puig-Suari, Augustus S. Moore, Shinichi Nakasuka, Robert J. Twiggs, "CubeSat: A new Generation of Picosatellite for Education and Industry Low-Cost Space Experimentation", In *Proceedings of the 14th Annual AIAA/USU Conference on Small Satellites*, Logan, Utah, USA, August 13-16 September 3, 2000.

[2] The Third Round Table on Micro/Nano-Technologies for Space, ESTEC, WPP_174, 15-17 May 2000.

[3] Distance Learning Application in NCHC, http://www.nchc.gov.tw/english/06_education/distance_learning/

[4] The Industrial Technology Research Institute of Taiwan, R.O.C. , http://www.itri.org.tw/eng/

[5] The Shihlin Electric & Engineering Corp. , http://www.seec.com.tw/

[6] The E-One Moli Energy Corp., http://www.e-one.com.tw/

[7] The 8051 product information of the Winbond Electronics Corp. , http://www.winbond.com.tw/C-WINBONDHTM/partner/b_2_f_2.htm

[9] The P-POD Payload Planner's Guide, Revision C, June 5, 2000, Cal Poly. http://www.calpoly.edu/~aero/polysat/