The Design and Feasibility Study of Nanosatellite Structures for Current and Future FSI Micromissions

Badrinarayan Shirgur and Derek Shannon

Advisors: Dr. Chan Ho Ham and Dr. Roger W. Johnson
Mechanical, Materials and Aerospace Engineering Dept.
Florida Space Institute
University of Central Florida

Abstract: To support focused science and engineering micromissions, spacecraft bus designs should minimize mass and maximize design flexibility without reducing capability. This requires a highly efficient spacecraft structure to maintain the required stiffness with a minimal mass. In the following presentation, two design approaches are evaluated for the structure of the Florida Space Institute's nanosatellite bus. One design uses sandwich construction exclusively, representing the current level of spacecraft structures. The other design uses a cast aluminum primary structure, which is a new approach for nanosats. Based on the evaluation of these two structures, the cast aluminum design is selected for FSI's upcoming micromission, which will demonstrate a JPL microthruster with funding from the Florida Space Grant Consortium.

1. Introduction

Despite recent concerns about the "Faster, Better, Cheaper" policy for space missions, the Florida Space Institute (FSI) is continuing efforts to develop low-cost, small spacecraft capable of significant, yet focused missions. Since FSI has developed a student-oriented space exploration program, the goal of this research is to create a compact and modular spacecraft bus for micromissions in space science and engineering. One of the major challenges in designing a micro- or nano-satellite is to minimize the mass of all subsystems. To achieve a spacecraft mass of about 10 kg, the defining property of a nanosatellite, two features are vital. Miniaturized technology is one. The other essential asset, and the focus of this paper, is a highly efficient structure.

Most existing microsats and nanosats have one of two types of primary structures: a load-bearing shell structure, or a stack of component trays with stiffeners [1, 2, 3, 4, 5, 6, 7, 8]. The surveyed spacecraft use sandwich construction, stiffened plates, or thin-walled trays. The spacecraft are evenly divided between using fiber-reinforced composites and aluminum primary structures.

From this survey, it was seen that the design approaches used in current microsat structures are the same as those used in larger satellites, with only a reduction in scale. As envisioned by Rossoni and Panetta [9], new approaches and processes will be required to improve the efficiency of structures beyond the current level of technology. Multi-functional structures, improved composite construction, and monolithic structures are a few of the proposed ideas.

Based on this preliminary research, two approaches were investigated for the design of the FSI nanosatellite bus structure. The first design method takes a step toward the next generation of nanosats by using aluminum investment casting to create a monolithic primary structure. In the second design approach, sandwich construction is used exclusively. The sandwich design represents the current limits of spacecraft structures.

This paper presents both the cast and sandwich structure designs, then evaluates the structures for use in the nanosatellite bus under development at FSI. The key evaluation criteria include mass, payload capacity, modular design, launch vehicle compatibility, cost, and ease of manufacture and assembly. Evaluation results indicate that the cast structure is a more versatile and modular design suited for missions with multiple nanosats. The honeycomb structure is useful for single spacecraft, mass-critical missions. Because design flexibility and modularity are more important characteristics for FSI's current needs, the cast structure will be used for the FSI nanosat bus. The first spacecraft on which the structure will be implemented is a Florida Space Grant Consortium funded mission, which will demonstrate attitude and orbit control using hydrazine microthrusters developed by the Jet Propulsion Laboratory.

The paper is organized as follows. The requirements used to design both structures are defined in the following section. Section 3 provides

the details of each design, and Section 4 gives the structural analysis results. Section 5 presents the performance analyses and evaluation of the cast and sandwich structure design approaches. Finally, the results are summarized in the conclusion.

2. Design Requirements

The design requirements have been defined based on two goals. The first goal is to support the development of a nanosatellite bus that can be used for a variety of science and engineering micromissions at FSI. To achieve this goal, the nanosat structure should be easily adapted to different payloads, launch vehicles, and subsystem components. The target mass of each nanosatellite is 10 kg, based on the definition of a nanosat rather than a programmatic constraint. The design of a modular, yet low mass structure proved to be very challenging.

The second goal is to apply one of the structure designs to the microthruster demonstration mission mentioned previously. Because the project start date for this mission is in early June, few requirements and specifications are available at this time.

The Space Shuttle's Hitchhiker Ejection System (HES) has been tentatively selected as the launch carrier. The HES constraints are more stringent than many other launch vehicles, so the nanosat should have enough safety margins for potential use on other launch vehicles. The selection of a different launch vehicle in the future should relax constraints rather than create a design problem.

The HES specifications (740-SPEC-008, 1999) were used to design the nanosatellites. Table 2.1 lists the primary HES constraints that affect the structural design of the nanosatellite.

Table 2.1: Launch Vehicle Constraints

Constraint	Value
Maximum mass (kg)	68.0
Maximum diameter (in)	19.0
Maximum height (in)	20.5
Max. C.G. re centerline (in)	0.25
Max. C.G. re interface plane (in)	10.25
Min. natural frequency (Hz)	50
Limit load factor (each axis) g's	11
Factor of Safety – yield	2.0
Factor of Safety – ultimate	2.6

To begin designing the structures for the nanosats, some additional assumptions are required. Three nanosatellites will be deployed in one launch, so they will be stacked on top of each other in the HES canister. The launch configuration is constrained by the HES, and the requirements for each nanosatellite are derived from these system requirements (Table 2.2). The bottom satellite will include the marmon ring necessary to interface with the HES ejection mechanism.

Because the Space Shuttle will be used, the nanosats will be deployed in a circular, low Earth orbit with a 51.6° inclination and an altitude of 350-450 km. The launch stack of nanosats will be deployed from the HES as a single unit. At a safe distance from the space shuttle the satellites will be activated. This will release the satellite deployment mechanism and separate the individual satellites. The satellites can be deployed all at once or they can be deployed one at a time, depending on the particular mission design constraints.

Table 2.2: Derived Requirements for Each Nanosat

Constraint	Value
Maximum diameter (in)	18.50
Maximum height (in)	6.30
Max. C.G. re centerline (in)	0.20
Max. C.G. re interface plane (in)	3.40
Min. natural frequency (Hz)	50
Limit load factor (each axis) g's	11
Design F.S. yield	2.0
Design F.S. ultimate	2.6

Basic information on each subsystem is also necessary to design the structure. A team of FSI students has completed a preliminary investigation of the nanosat bus, specifying commercial-off-the-shelf (COTS) and miniature components. These components are used to develop both the honeycomb and cast structures.

Using the defined requirements, the two structure designs are presented in the next section.

3. Nanosat Structure Designs

The nanosatellite design is well defined by Wertz and Larson [10], and Sarafin [11]. First, the basic configuration of the nanosat is defined. Then the primary structure is sized to comply with the strength, stiffness, and safety requirements. The component layout is refined to achieve the required center of mass and mass properties. Finally, the structure is analyzed in detail using finite element analysis.

The feasibility study of the two approaches was aimed at designing structures based on existing and new technology. The application of investment

casting to nanosat structures is a new approach that should enable an efficient, mass producible structure. Sandwich construction using aluminum or composite materials is currently the most efficient spacecraft structure design technique. In this section, the cast structure design is presented, followed by the sandwich construction design. Analytical verification of both designs and design evaluation will be presented in Sections 4 and 5, respectively.

3.1 Cast Structure Design

This structure was designed to enable a single structural design to be used on several missions with very few changes to the basic structure. The design is based on different modules attached to the main structure. Figure 3.1 outlines the structural hierarchy used. Modules for the payload and components were designed to be compact, interchangeable, and versatile. This concept provides the basis for the cast structure design.

An octagonal structure was selected for the following reasons:

- Four identical module boxes can be used. Each module box size was designed to accommodate the required COTS components. Easier interchange of module boxes
- Symmetric design, easier to balance the CG in assembly
- More power from body mounted solar panels
- Payload bay in the central part. Top and bottom sides open, for easier adaptation to mission specification. Can be enclosed completely if necessary.

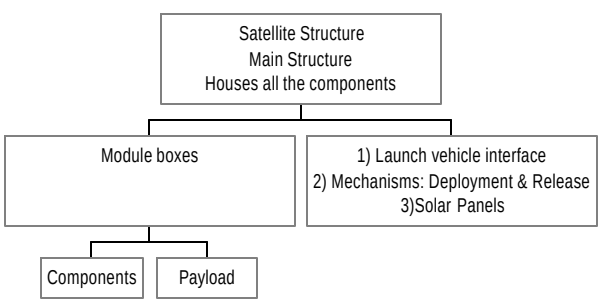

Figure 3.1 Design Concept

To accommodate different missions two options were considered and designed, body mounted solar panels as well as deployable arrays.

Space shuttle launches satellites at an inclination angle of 51.6°, in this case body mounted solar panels would be the source of power. For additional power requirements and missions having low inclination angles, it would be necessary to have deployable solar panels pointing at the sun in addition to the body mounted ones, this was designed in this cast design approach.

3.1.1 Model Development

The preliminary dimensions of the nanosatellite were designed to comply with the Hitchhiker Ejection system (HES) specifications for the space shuttle. Figure 3.2 shows the exterior dimensions of the nanosatellite.

Subsystem component specifications were studied for design of mountings and enclosures as given by the component manufacturers to facilitate the design of the module boxes.

Main Structure as well as the module boxes was designed as casting with the material specification for Aluminum cast D357. This was best performance material that could be used and could be cast without any complex procedures.

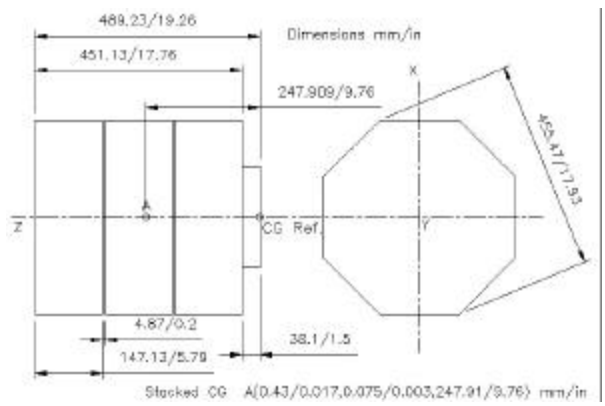

Figure 3.2 Exterior dimensions in mm (Stacked configuration)

Design of major parts for the Nanosatellite is discussed in the following sections.

3.1.2 Main Structure Design

As discussed in the previous section, the design was frozen with the dimensions and the octagonal shape of the nanosatellite. The main structure is shown in Figure 3.3

Investment casting was considered for manufacturing the main structure for the following reasons:

- Easier to manufacture
- Close tolerances achieved
- Mass producible
- Complex structures can be cast
- Repeatability and reliability achievable

– Optimization of the structure possible for lightweight construction

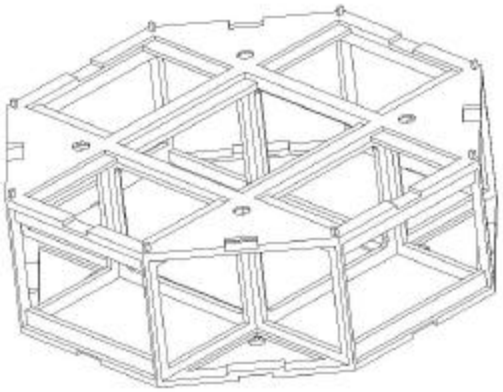

Figure 3.3 Main Structure

The main structure was designed to minimize use of module boxes of different kinds. It was provided with flanges for not only mounting the module boxes but also provide a heat flow path. The top and bottom parts of the structure are covered with thin sheet metal like cast cross-section material between ribs and cross beams, this covers the satellite from both top and bottom sides. This will also acts as thermal radiators when coated with thermal coatings. Bottom side especially is completely covered as there are no mountings and fitting except for the GPS patch antennas, release mechanisms and launch vehicle adapters such a marmon ring in case of Hitchhiker ejection system for space shuttle.

Beams in a box type fashion interconnect the bottom part and the top part in the inner box type configuration. They surround the payload bay and separate the component module boxes from the payload. These beams are the main structural components that stiffen the structure against all the launch vehicle loads. They take bending, shear and torsion loads. The cross section of these beams is cross-shaped, the moment of inertia is maximum in both x and y axes, so that they can take bending stresses in the cross (x & y) directions and the buckling stresses. Launch vehicle and satellite deployment mechanisms are interfaced to these members as they form the load bearing structure. Multiple bolt holes enter the beam cross section to transfer the loads from the launch vehicle adapter and deployment mechanism.

Another beam section originating from the junctions of inner beams further continue outward towards the edges of the satellite. These support the Component module boxes.

The top and bottom part on the edges is joined at all the eight vertices by rectangular section.

The component modules mount on the four sides of the satellite. Remainder four sides are empty, but can house torque rods or other equipment, which could be fitted in the space available. The component module boxes occupy the maximum space, as the shape is rectangular.

The mountings for the module boxes are on the four sides are flanges on top and bottom faces, which run along the length of the module box mounting side. They are thick enough for tapped holes of sizes M3 (metric). They also act as heat path for the module boxes.

For versatility, the design has been such that the module boxes for the components can be mounted from top or the sides of the satellite. The sides are covered by solar panels. The top module box has its own cover plate so that the components are not exposed to harmful space radiation.

Solar panel mountings are on the top and bottom faces of the satellite. They are positioned in the center of each face and have a groove running along the length of the side. A bracket from the solar panel substrate would fit in the groove and would be fastened on assembly. Solar panels are in contact with the main structure on the periphery of the panel. This acts as a heat path.

Deployable solar panels are mounted on the top face of the satellite. Hinges are integrated with the main structure and holes are drilled in them on assembly with proper alignment techniques. A small pin holds the solar panels to the main structure. A spring that forces the panels to be deployed is also to be mounted in the hinge area.

Solar panel deployment mechanism is discussed in the later sections.

3.1.3 Module Box Design

Module boxes are further sub divided into two categories, component module box and payload module box.

3.1.3.1 Component Module Box

A box type construction with the front side open to facilitate easier mounting and replacement of components in assembly and testing phases.

Two different types of boxes were designed for the Top mounting and Side mounting module boxes. This was done due to size variations in the mountings of the boxes. Both sizes can be optimized to fit one box in both positions.

In each of the above box designs, two variations are possible. One variation is completely enclosed, open on one side. While the other is designed so that module box is lighter. The latter box

will be used for components that don't require complete enclosure except for supporting members.

Front Flanges are provided for fastening the module boxes to the main structure. Countersunk holes and screws that will be used would minimize the head clearance provided, this would help in using maximum space possible.

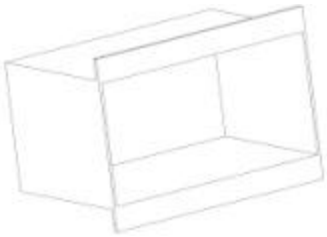

Figure 3.4. Module Box

The sizing of the module boxes was checked for the maximum size of the components that were selected by the FSI student team that designed the other subsystems.

These module box house batteries, electronic cards, ADCS components such as magnetometers, torque rods etc.

3.1.3.2 Payload Module Box

It is similar to the component module box except its open at both the top and bottom ends to facilitate sensing for payloads. These ends can be covered with the cover plates for each side if necessary.

3.1.4 Solar Panels

Body mounted solar panels are the primary source of power. Eight panels mounted on the periphery of the satellite would provide optimum power. This would be true only if the inclination of the orbit of the satellite if high enough to face the Sun. This would be directed by the mission constraints.

In case of smaller inclination angle orbits, the solar panels would require to point towards sun. To administer these problems four additional deployable solar panels that can provide the deficient power to the satellite was also designed.

These solar panel are stowed in launch configuration and will be deployed when the satellite is separated from the launch vehicle and other satellite.

The mountings for the solar panels such as brackets, hinges and release mechanism are integral with the solar panel substrate. The substrate for the solar panel is aluminum alloy sheet with the thickness of 3mm.

3.1.5 Mechanism Design

The mechanisms for this nanosatellite are the Solar Panel deployment mechanism and the Launch vehicle deployment mechanism.

Both the designs are based on the same concept. It consists of top and bottom housing, which are mounted on satellite (top & bottom faces res.) that need to be deployed and separated. A wire of 3mm diameter connects them. This wire is a special type of wire called a fuse wire. The fusible wire is a small part of the wire that connects the two ends of a wire of other stronger material.

The top housing locates in the bottom housing and the tension in the wire holds the top housing against the bottom housing. This provides path for load transfer from the either satellite. Hence no load is transferred by the wire two either satellites.

A compression helical spring is mounted in the bottom housing that provides that satellite with the required ejection force. The spring is not shown in the Figure 3.5

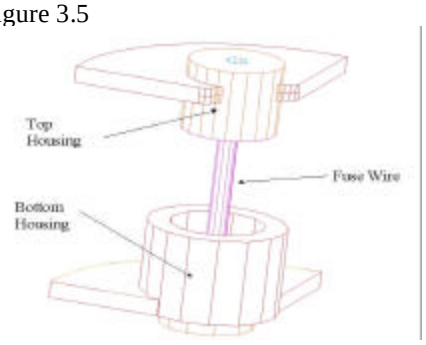

Figure 3.5: Satellite deployment mechanism

The concept is that when electric current is passed through the wire, the fuse wire part heats and melts. Hence the wire snaps and the mechanism is released free. As the mechanisms are spring loaded, this would release the satellites and provide the initial velocity to move away from each other into orbits.

Solar panel deployment consists of two different parts, a torsional 180° spring and the solar panel substrate.

Solar Panel substrate of material cast Al D357 is integrated with the hinges and a boss that holds the fuse wire. This can be seen in Figure 3.6. The hole in the boss that houses the fuse wire and a self-locking grub screw that holds the fuse wire. This self-locking screw is screwed radial on the outer periphery of the boss.

The hinges on the solar panel is as shown in the Figure 3.6, the solar panel final position after

deployment will rest against the hinge on the main structure. This position can be adjusted so that solar panels can be pointing at the sun. This can be done at a turn of a screw.

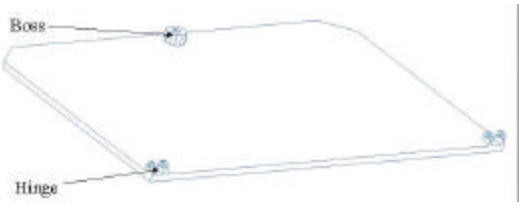

Figure 3.6 Deployable Solar Panel

A torsional spring is used to deploy and hold the solar panels to their position.

3.1.6 Configuration

The Stacked assembly of the satellites is shown in Figure 3.7

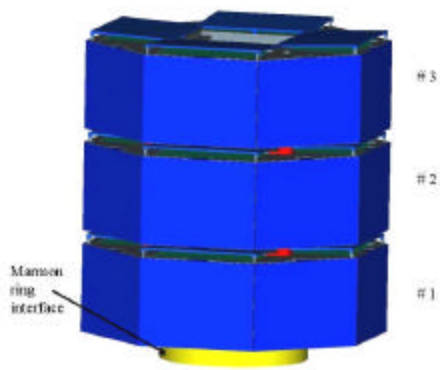

Figure 3.7. Stacked assembly of satellites.

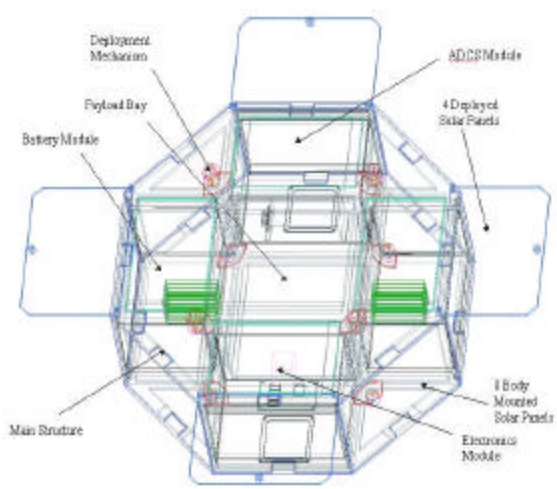

Figure 3.8: Component Layout and assembly configuration.

Individual satellite with solar arrays deployed and component layout is shown in Figure 3.8. The components were mounted in the module boxes at appropriate positions to comply with the CG requirements. The assembly configuration for each individual satellite has 8 body-mounted solar panels, 4 deployable solar panels, 4 module boxes and a Payload module box mounted on the main structure. Each subsystem level module arrangement is defined in the Figure 3.8.
Table 4.1 discusses the CG compliance with the HES constraints.

Table 3.2 lists the subsystem wise mass budget in the assembly configuration for each satellite.

3.2 Sandwich Construction Design

3.2.1 Design Approach

To satisfy the mass and launch vehicle requirements, the nanosat structure must be stiff and strong yet have a very low mass. These requirements are very difficult to achieve using solid aluminum structural members with bolted or riveted joints. Sandwich construction, however, is ideal for a nanosatellite structure due to its excellent stiffness-to-weight and strength-to-weight ratios.

Sandwich structures are composed of two face sheets bonded to a core (Figure 3.9). The most common aerospace core type, aluminum honeycomb, is constructed of bonded strips of aluminum foil which are then expanded to create hexagonal cells. When loaded, the face sheets of a honeycomb structure act like the flanges of an I-beam, and the core acts as the web. By designing the face sheet and core thicknesses properly, a structural panel can be produced with much higher strength and stiffness for the same weight as a solid panel.

Both metals and fiber-reinforced composites can be used in honeycomb panels. Composites are more efficient in terms of mass, but aluminum panels are easier to work with and cost lesser. Therefore, the sandwich panels used in this design have aluminum faces and core.

Instead of redressing the design of deployment mechanisms and deployable solar arrays, this design section focuses on the performance of the honeycomb primary structure. The mechanisms used to restrain and release the nanosats from the launch stack are very similar to those presented in Section 3.1.5. There are only minor differences in geometry due to the different shapes of the honeycomb and cast structures.

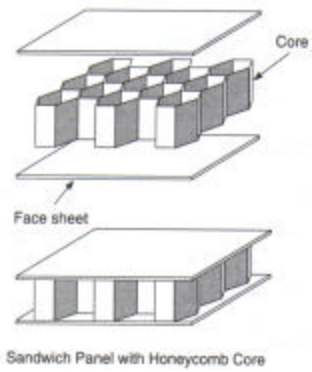

Figure 3.9: Sandwich construction [10]

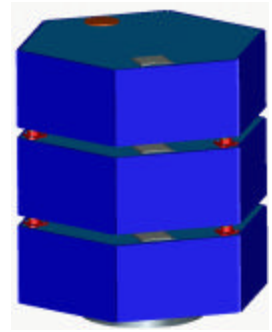

Figure 3.11: Honeycomb construction nanosatellites in launch configuration

3.2.2 Configuration

The general shape and dimensions of the nanosatellite are based on several design considerations. Body mounted solar panels will be used, so the surface area available for solar cells must be maximized. A hexagonal prism is the shape chosen for the nanosat because it provides adequate surface area while keeping simple flat plates instead of a cylindrical surface. The hexagonal configuration also requires less parts and manufacturing than octagonal cross sections. Dimensions of the nanosatellites are derived from the launch vehicle envelope (Figure 3.10). As described in Section 2, three nanosats will be stacked on top of one another in the HES canister (Figure 3.11). Because the nanosatellite at the bottom of the stack must interface with the launch vehicle, the marmon clamp interface ring is bolted to the bottom plate. The interfaces between the other two satellites consist of restraint and separation mechanisms located at three corners of the hexagon.

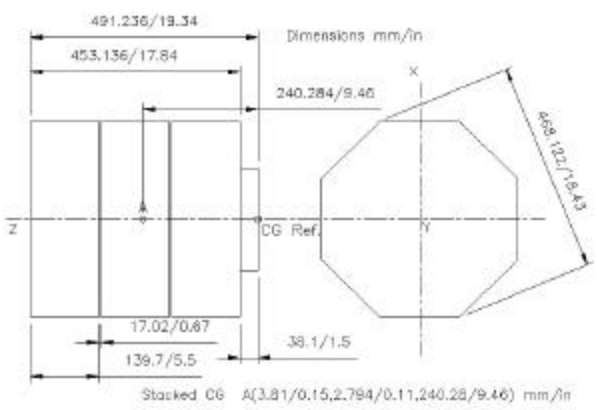

Figure 3.10: Honeycomb construction nanosatellite

3.2.3 Primary Structure

The primary structure is essentially a hexagonal shell composed of aluminum honeycomb panels. The hexagonal bottom plate supports the spacecraft components, and, in the case of the bottom nanosat, transfers loads to the launch vehicle interface. Six rectangular panels form the sides of spacecraft. These support the solar cells on the outer surface and torque coils on the inner surface. A hexagonal closeout panel, which supports only the GPS and communications patch antennas, is attached to the top of the satellite.

To size each of the honeycomb panels, a MathCad worksheet was created based on approximate sandwich structure analysis methods compiled from several sources [12, 13, 14, 15]. Simply supported sandwich beam and plate models with uniform distributed loads were used to calculate the maximum facing stress, core shear stress, deflection, critical instability loads, and natural frequencies. Although most of these analyses neglect transverse shear deformation effects, the results are sufficiently accurate for sizing the honeycomb panels. The deflection and natural frequency calculations do include approximations of transverse shear effects, but the accuracy of results degrades rapidly as the deflections and the modes increase [13, 16].

Using the approximate analysis worksheet, several face sheet alloys and a range of core configurations were analyzed. The material and the thicknesses of the core and face sheets were determined (Table 3.1), using standard sheet metal thicknesses for the faces [11]. Aluminum 2024 is the material selected for the face sheets, while Al 5056 will be used for the core. Based on availability as well as performance analyses, the core has a cell spacing of 3/16 in (4.76 mm), a foil thickness of 0.001 in (0.025 mm), and a density of 3.1 pcf (49.66 kg/m^3) [17].

The method of fastening the structural members and components is always a design concern. Bolted or riveted joints cause high stress concentrations and generally require a significant allocation of mass. Also, special potted inserts are required in honeycomb panels to prevent local failures at bolt holes. To maximize efficiency and minimize mass, bonded joints will be used where possible in the primary structure. The six sides will be bonded together using 120° angle, aluminum 2024 extrusions bonded to each side of the joint. The resulting structure will then be bonded to the bottom plate using 90° angle extrusions. Because the top plate must be removed to access the satellite's interior, it is bolted in the corners of the hexagon. The components are also bolted to the bottom panel, using threaded inserts in the honeycomb.

At the separation mechanism attachment points, special brackets are required because of the concentrated loads that must be transferred between satellites. These brackets are bonded to the rectangular panels and the extrusions joining the panels. The mechanisms are bolted through the top or bottom hexagonal panel into threaded helicoils in the brackets. This configuration transmits the load from the upper bracket into the hexagonal shell and then into the lower bracket.

Table 3.1: Honeycomb panel parameters

Component	Face Sheet Thickness (in)	Core Thickness (in)
Bottom plate	0.032	0.936
Top plate	0.016	0.218
Solar panels	0.016	0.218

3.2.4 Component Layout

The component layout (Figure 3.12) is designed primarily to balance the spacecraft so that it meets the center of mass requirements. To provide the greatest flexibility and the least number of changes required between missions, the payload is located at the center of the nanosat. The bus system components are arranged to maximize the allowable payload volume while maintaining the required center of mass.

The mass budget is shown in Table 3.2, while Table 4.1 gives the final mass properties of each individual nanosat and the launch configuration.

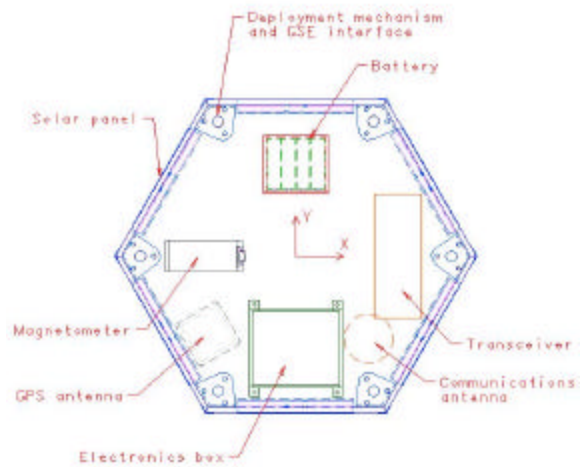

Figure 3.12: Component layout

3.3 Design Summary

Using honeycomb sandwich construction and cast aluminum concepts to design the primary structure enables the nanosat to achieve all structural requirements with minimal mass. Table 3.2 gives the design mass by subsystem and the total nanosat mass.

Table 3.2: Mass Budget

Subsystem	Cast Nanosat Mass (kg)	Honeycomb Nanosat Mass (kg)
ADCS	0.83	0.83
Communications	0.30	0.30
C&DH	0.36	0.70
Power	1.18	0.92
Structure	8.03	2.31
Payload	5.00	5.00
Total	**15.71**	**10.07**

4. Design Analysis

To verify compliance with launch vehicle requirements (Table 2.1), the natural frequencies of the nanosats and the stresses in the structural members were determined by finite element analysis. SDRC IDEAS Masterseries was used to create the models, process the analyses, and display the results.

4.1 Analysis approach: Finite Element Modeling

Several similarities exist between the models of the nanosat structures. The upper nanosatellites in the launch stack and the components were modeled as lumped masses located at their respective centers of mass. Fasteners and bonded joints were represented by rigid elements. Three degrees of

freedom (DOF) restraints were placed at either the marmon ring interface or the separation mechanism locations, depending on the nanosat analyzed. The approaches used to model the primary structures of the sandwich and cast nanosats are presented in the following sections.

4.1.1 Cast Nanosat FEM

Because of the complex geometry and the monolithic nature of the cast structure, the finite element model was meshed with solid elements directly from the solid model (Figure 4.1). The module boxes were modeled with solid elements and analyzed individually.

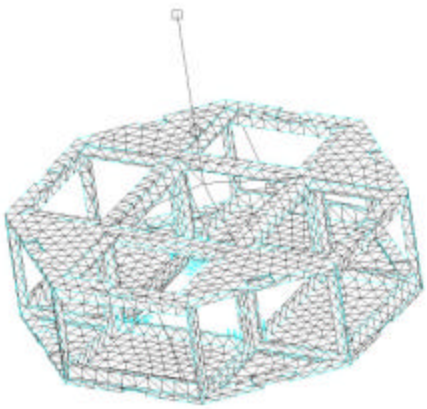

Figure 4.1: Cast structure FEM, including top two nanosats, components etc. as lumped masses

4.1.2 Honeycomb Nanosat FEM

The most challenging aspect of the sandwich nanosat analysis was determining the best technique for modeling the honeycomb panels. Significant research was conducted concerning both classical and finite element analysis methods for sandwich structures. Two approaches were identified as good candidates for finite element modeling. The first is laminate theory. Because sandwich structures are basically laminates of core and face sheets, a refined laminate theory (including transverse shear deformation effects) provides a good model of honeycomb structures [13, 18, 11]. To use the laminate method in IDEAS, the material properties of each layer are defined and the equivalent material properties of the entire panel are determined. The equivalent material can then be applied to a single layer of solid or shell elements in a finite element model. After applying loads and solving the model, the stresses in each lamina can be determined by returning to the laminate task.

The second approach to modeling sandwich structures is to create separate layers for the faces and core. Because the face sheets are so thin, they are well represented by shell elements. For best results with the core, however, solid elements should be used [18,19]. This technique will give more accurate results in the core, but the laminate method is sufficient for system level analyses. Accordingly, the laminate approach was deemed appropriate to model the honeycomb panels at this stage in the design.

Before analyzing the nanosat structure, the performance of the IDEAS laminate method was verified with several simple examples [20] and the MathCad approximate honeycomb analysis worksheet. The IDEAS results matched both fiber reinforced composite examples and sandwich structure examples very well.

After validating the modeling approach, the sandwich laminates were created for each of the nanosat's honeycomb panels. The equivalent materials were applied to thin shell elements, which were then added to the nanosat finite element model.

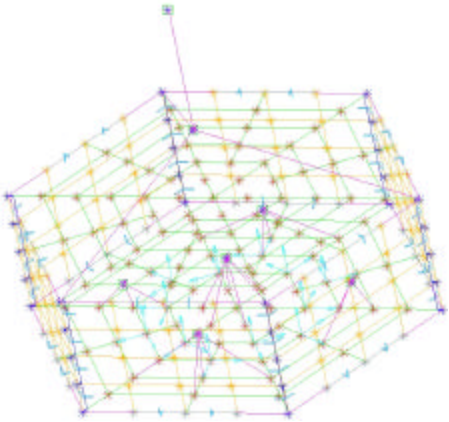

Figure 4.2: Honeycomb structure FEM, including top two nanosats as lumped masses

4.2 Simulation Results

The natural frequency analyses of the finite element models were completed using the Lanczos solution method in IDEAS. Static analyses were then performed to determine the maximum deflections and the maximum stresses in the structural members. The loading conditions used in the static analyses were the specified accelerations of 11 g's in each direction multiplied by a safety factor of 2. As Table 3.2 illustrates, both structure designs comply with the HES constraints.

4.2.1 Cast Nanosat Results

The fundamental frequency of the cast nanosats in launch configuration is 84 Hz, which

provides a good margin above the minimum requirement.

The stresses are again below the allowable limits. Stress concentrations are observed at the launch vehicle interface, but using maximum load transfer paths to the main structure can reduce these.

A maximum deflection of 0.054 in (1.37 mm) is experienced at the top of the lower satellite in the launch configuration. Hence, the topmost (3rd) satellite in the stacked configuration has a maximum deflection of 0.183 in (4.65 mm) from the original position. It is well within the safe deflection limits of the HES specifications and does not exceed the envelope requirements.

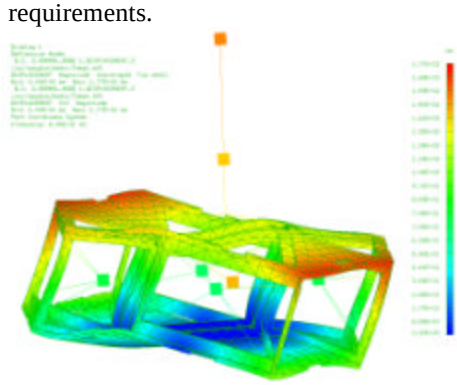

Figure 4.3: First mode of cast structure design

4.2.2 Honeycomb Nanosat Results

The honeycomb panel parameters selected from the approximate sizing analysis were verified in all but one case. Because the boundary conditions of the panels in the sizing model were edge supports, they could not approximate the interface between the marmon ring and the bottom plate of the lower nanosat in the launch stack. This plate was redesigned through analysis to arrive at the parameters in Table 3.1.

The fundamental frequency of each individual nanosat is 132 Hz, but the combined launch stack fundamental frequency is 56 Hz (Figure 4.4).

All of the structural members experience stresses well below the allowable limits. Higher concentrations of stress will be located at joints and panels inserts, which must be analyzed in detail when the nanosat design reaches that level.

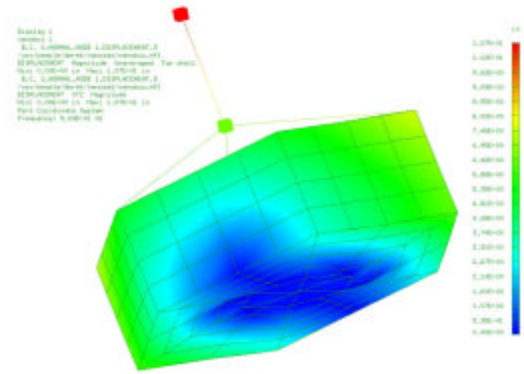

Figure 4.4: First mode of honeycomb nanosat

4.3 Analysis Summary

Both structure designs comply with the requirements of the Hitchhiker Ejection System (Table 4.1), therefore, they are both valid designs. Because the HES constraints are more stringent than many other launch vehicles, the honeycomb and cast structures should be easily adapted to these launch systems.

Table 4.1: Compliance with HES constraints

Individual Satellite Parameter	**Requirement**	**Cast Nanosat**	**Honeycomb Nanosat**
Mass (kg) (goal)	10.0	15.7	10.1
Max. CG re centerline (in/mm)	0.20 / 5.1	0.017 / 0.4	0.148 / 3.8
Max. CG re interface plane (in/mm)	3.00 / 76.2	2.96 / 75.3	2.13 / 54.1
Launch Stack Parameter			
Mass (kg)	68.0	48.8	32.3
CG re centerline (in/mm)	0.25 / 6.4	0.02 / 0.4	0.148 / 3.8
CG re interface plane (in/mm)	10.25 / 260.4	9.76 / 247.9	9.46 / 240.3
Min. f_n (Hz)	50	84	56
Min. Static Clearance (in/mm)	0.50 / 12.7	1.034 / 26.3	0.784 / 19.9
Min. Dynamic Clearance (in/mm)	0.50 / 12.7	0.851 / 21.6	0.577 / 14.7
FS_{yield}	2.0	2.45	7.89
$FS_{ultimate}$	2.6	2.88	9.12

5. Design Evaluation

Table 5.1 and Table 5.2 summarize the major characteristics of the honeycomb and cast structures.

Table 5.1: Comparison chart

	Advantages	Disadvantages
Cast Structure	Modular – Interchangeable parts, payload bay versatile for science and experimental missions	Higher Mass than Honeycomb
	Flexibility at subsystem level, min. design changes	Large Initial cost
	Assembly can be handled independently, min. assembly time, cost and manpower.	New modular more expensive, lead time
	Lower cost, more compact packaging than other designs	
	Less number of parts, joints & fasteners, hence increasing reliability	
	Different alloys - 20% mass reduction	
Honeycomb Structure	Extremely low structural mass	No significant cost savings for additional nanosat structures
	Lower initial cost than cast structure.	Threaded insert location to be redesigned for different components
	Launch vehicle adapters can be interchanged	Specialized construction required
	Multiple fastening locations for LV adapters increase the stiffness and payload capacity to15 kg.	Analysis more complex due to honeycomb construction and bonding

Table 5.2: Evaluation Chart [21]

	Cast Structure	Honeycomb
Bus		
Mass (kg)	10.7	5.1
Payload		
Mass (kg)	5	5
Volume (cu.in)	5 x 6.2 x 5.3	5.5 x 6 x 4.25
Mfg.		
Lead time	6 Weeks	1 month
One time Cost ($)	26.5K	15K
Recurring Cost($)	5K	15K
Assembly		
Lead time	1 month	1 month
Ease/Replace	Ref. Note: 1	Ref. Note: 2
Versatility	Ref. Note: 1	Ref. Note: 2
LV Adaptation	Yes / simple	Yes

Several viewpoints and conclusions can be drawn from this discussion. Designing a structure that is lightweight, sufficiently stiff, modular, and versatile is very challenging. These properties are generally traded off depending on design requirements. The honeycomb structure has a very low mass, but the design approach is more appropriate for the production of a single satellite. It requires custom design and manufacture, so it cannot be adapted to new missions as easily.

The investment cast structure has traded mass for a more modular design. Although the initial cost is higher due to the cost of the pattern and tooling, the cast structure is ideal for the production of multiple nanosats.

6. Conclusions

Both cast and honeycomb construction design approaches can provide lightweight, compact and modular nanosatellite structures. For specific, mass-critical missions, the honeycomb construction design shows superior performance. The cast structure provides more flexibility in adapting to different missions and can be easily mass-produced.

One of the approaches must be selected for use on FSI's upcoming microthruster demonstration mission and future micromissions. Because a series of nanosats is envisioned, the cast structure design approach shows excellent performance and is recommended for the FSI nanosatellite bus.

Future work on this project will include a more detailed optimization for higher efficiency cast structure to further reduce the mass. It will also include efficient utilization of the space available, which will dramatically increase the payload envelope constraints. The microthruster mission requirements must also be accommodated as that project progresses. Implementing the cast structure

design into this micromission will provide the ultimate evaluation of the design approach presented in this paper.

7. Acknowledgements

The microthruster mission is a collaborative effort between the Florida Space Institute, Crestway Corp., and the Jet Propulsion Laboratory. Funding is provided by the Florida Space Grant Consortium through the Florida Space Research Program (FSRP 2000).

8. References

1. Panetta, Peter V. et al. "NASA-GSFC Nano-Satellite Technology Development." Proceedings of the 12th AIAA/USU Conference on Small Satellites. Logan, Utah, August 1998.

2. Sipple, D. et al. "NavGold – An On-Orbit Test Bed for Experiments in Formation Flight." Proceedings of the 13th AIAA/USU Conference on Small Satellites. Logan, Utah, August 1999.

3. Jackson, Bill and Jim Campbell. "The Subsystemless Satellite – A New Design Paradigm for the Next Generation of Small Satellites." Proceedings of the 12th AIAA/USU Conference on Small Satellites. Logan, Utah, August 1998.

4. Breiling, Maureen F. et al. "The Artemis Project: Picosatellite-Based Missions to Study VLF Phenomenon." Proceedings of the 13th AIAA/USU Conference on Small Satellites. Logan, Utah, August 1999.

5. Stanford Small Space Systems Laboratory. OPAL home page.

6. Swedish Institute of Space Physics and Lulea University of Technology. Munin satellite home page – www.munin.irf.se

7. AeroAstro. "Bitsy." Product information. Woodland Hills, CA, 1998.

8. Underwood, Dr. Craig I., et al. "A Low-Cost Modular Nanosatellite Based On Commercial Technology." Proceedings of the 12th AIAA/USU Conference on Small Satellites. Logan, Utah, August 1998.

9. Rossoni, Peter and Peter V. Panetta. "Developments in Nano-Satellite Structural Subsystem Design at NASA-GSFC." Proceedings of the 13th AIAA/USU Conference on Small Satellites. Logan, Utah, August 1999.

10. Wertz, James R. and Wiley J. Larson, ed. Space Mission Analysis and Design. 3rd Ed. Torrance, CA: Microcosm Press and Kluwer Academic Publishers, 1999.

11. Sarafin, Thomas P., ed. Spacecraft Structures and Mechanisms – From Concept to Launch. Torrance, CA: Microcosm, Inc. and Kluwer Academic Publishers, 1995.

12. Bitzer, Tom. Honeycomb Technology: Materials, design, manufacturing, applications and testing. Chapman & Hall: London, 1997.

13. Vinson, Jack R. The Behavior of Sandwich Structures of Isotropic and Composite Materials. Technomic Publishing Co.: Lancaster, 1999.

14. Young, Warren C. Roark's Formulas for Stress and Strain. 6th Ed. McGraw-Hill Book Company: New Dehli, 1989.

15. Osgood, Carl C. Spacecraft Structures. Prentice-Hall, Inc.: N.J., 1966.

16. Grediac, M. "A finite element study of the transverse shear in honeycomb cores," *Int. J. Solids Structures*, vol. 3, n. 13, p. 1777-88, 1993.

17. "HexWeb Honeycomb Attributes and Properties." Hexcel Composites, 1999.

18. "Honeycomb Sandwich Design Technology." http://www.hexcelcomposites.com/products/honeycomb/sand_design_tech/. Hexcel Composites, 2000.

19. Triplett, Matt Hugh, "Static and dynamic finite element analysis of honeycomb sandwich structures," Master's Thesis, University of Alabama, 1995.

20. Hyer, Michael W. Stress Analysis of Fiber-Reinforced Composite Materials. WCB McGraw Hill: New York, 1998.

21. Cost analysis and lead time rough estimates provided by Howmet Castings, Tx.