AeroAstro's X-Band Transponder – Meeting the Communication Needs of Tomorrow's Small Spacecraft

Eric Aamot
AeroAstro, Inc.
520 Huntmar Park Drive
Herndon, VA 20170
(703) 709-2240 x130
eaamot@aeroastro.com

Ray Zenick
AeroAstro, Inc.
P.O. Box 502
Solana Beach, CA 92075
(858) 481-3785
ray@aeroastro.com

Kimberly Kohlhepp
AeroAstro, Inc.
327 A Street, 5th Floor
Boston, MA 02210
(617) 451-8630
kim@aeroastro.com

Abstract. This paper will discuss a number of technologies and design philosophies leveraged from commercial industry that AeroAstro has applied to the development of a new spacecraft communications subsystem. Although there has been a recent push toward reducing spacecraft mass and cost, there is no commercially available communications equipment that will significantly contribute to that reduction. While spacecraft mass has dropped more than an order of magnitude in the past ten years, radios have not followed this trend.

AeroAstro is developing a highly integrated, power-efficient, low operating voltage X-Band telemetry transponder for small satellite applications. This design leverages emerging technology from the telecommunications industry, using RF component technology developed for digital wireless communications and Direct Broadcast Entertainment. By making use of these advances, and continuing development in a few key areas, AeroAstro's transponder is designed specifically to provide low-cost, low-voltage, and low-mass earth-to-space communications.

The X-Band radio under development includes a high scale of integration, a very low mass and volume, a high level of power efficiency, and the ability to operate from low voltage supplies. Flexibility is key to the design philosophy, and the communications equipment can be configured to satisfy a wide variety of missions.

Introduction

AeroAstro is developing a new X-Band transponder, specifically tailored to the needs of today's small spacecraft and to the needs of micro and nanosatellites of the future. This development is made possible by a number of new technologies, including digital modulation and demodulation, low voltage surface mount components, commercial-off-the-shelf (COTS) components, and the use of application-specific integrated circuits. The new transponder will be smaller and lighter than anything on the market today, while providing an expandable architecture with low power consumption, and good data

throughput. The transponder (see Figure 1) will be available with a shorter lead-time and at a price significantly lower than any other X-Band space radios currently available.

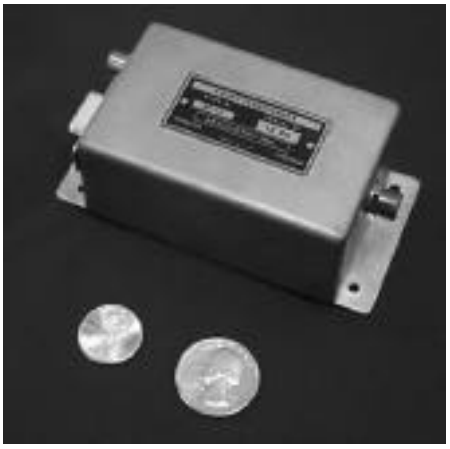

Figure 1. X-Band Transponder Model

Background

Recent trends in the aerospace and satellite industry indicate a shift toward smaller, lower mass spacecraft that are at the same time more power-efficient. However, the missions being conducted by these new spacecraft remain ambitious and complex, ranging from remote sensing of the earth to technology demonstration and communications constellations. These missions push the limits of small spacecraft technology with their low latency requirements and their high data collection and throughput rates, which in turn stress the communications systems.

Along with the traditional low earth orbit (LEO) applications, many new missions are taking advantage of highly elliptical orbits to meet their objectives. Elliptical orbits pose unique challenges, including a less benign radiation environment that must be addressed for each spacecraft subsystem. The communications system is often challenged when trying to maintain adequate link margins at all points around the elliptical orbit. In addition, these new small spacecraft missions are demanding faster downlink rates than ever before, putting even more burden on the communications system.

Spacecraft have been growing smaller in both size and mass in recent years. In part, this is due to the miniaturization of electronic components. Large volumes are no longer needed for flight computers, control electronics, imaging cameras, and large communications antennas. The push toward small spacecraft is also enhanced by the desire to take advantage of secondary launch opportunities. These low-cost launch slots enable a whole new class of mission that would not otherwise be flown: the ultra-low-cost spacecraft.

To take advantage of secondary opportunities, spacecraft must be able to fit within a number of tight physical envelopes and stay within restrictive mass limits. The result is that many of today's spacecraft are smaller than ever. This size reduction propagates through the entire system design. Smaller size means less surface area for body mounted solar arrays, and less volume for stowed deployables. Less internal volume is available for subsystem components and power storage batteries. These factors all favor low-voltage, low-power, miniaturized subsystem components such as AeroAstro's X-Band transceiver.

Another recent trend in small spacecraft missions has been the use of constellations or fleets of smaller spacecraft that collectively carry out more ambitious missions. NASA's ST-5 Nanosatellite Constellation Trailblazer technology demonstration mission, the Magnetospheric Constellation mission, and the Air Force's TechSat 21 are three examples of these. In order for these missions to be realized, miniaturized subsystem components will be used exclusively, and mass and power

are at a premium. The ST-5 spacecraft, for example, is only about the size of a large birthday cake, yet it will be demonstrating over half a dozen new spacecraft technologies while performing a valuable scientific mission. AeroAstro's X-Band transponder is one of the key, enabling technologies to this new class of missions.

The radio spectrum is becoming significantly more crowded, and spectrum allocations or licenses for the traditional bands of choice for small spacecraft (UHF, S-Band, and Ku/Ka Band) are harder to obtain. AeroAstro's new transponder operates in the higher frequency X-Band, in the range of 7.25 GHz to 8.5 GHz. Commercial ground stations are just beginning to support this band, and industry expectations are that more and more small spacecraft will begin using this band in the years to come. However, operations in the X-Band frequencies require some unique design considerations and pose a new set of design challenges. These stem from a much smaller selection of commercial off-the-shelf components in this frequency range due to the smaller market size and reduced consumer demand.

Recent NASA missions designed to study the earth-sun system and mutual interaction, magnetospheric mapping, and innovative technology demonstrations all have strong interest in a low-power, low-mass X-Band transponder. This interest confirms the trends noted above. As no existing radio can satisfy the requirements of these missions, technologies such as AeroAstro's transponder have become key to their system designs.

Technical Approach

Features

The new transponder combines all necessary radio frequency (RF) components into a single small package. Only the power source, antenna(s) and cabling need be external. To reduce mass and minimize volume, the reference oscillator, up- and down-conversion, local oscillator, low noise amplifier, diplexer, power amplifier, and modulator and demodulator are packaged together in a segmented aluminum housing which provides RF isolation between the high and low frequency components. The radio design allows for a number of alternate packaging scenarios, including a two-piece design in which the diplexer, LNA, and power amplifier (PA) can be co-located with an antenna. The single piece design was chosen as a baseline, because it provided the smallest and lightest package, and can be easily incorporated into most spacecraft.

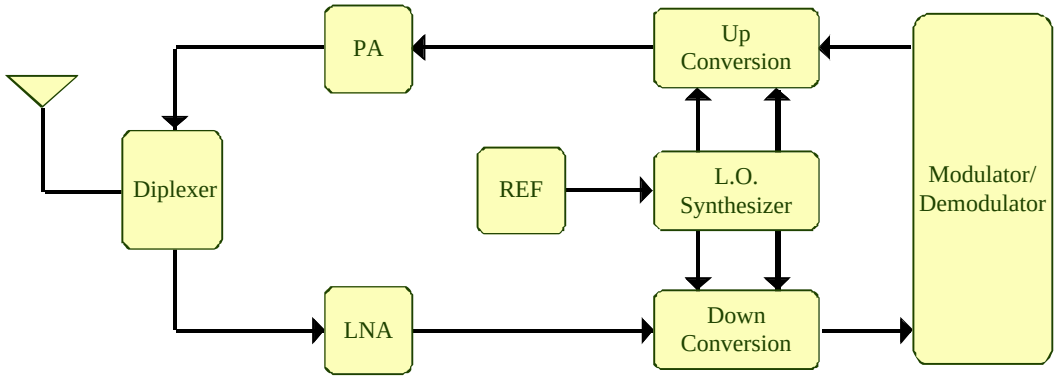

Figure 2. X-Band transponder components

The single, unified package helps simplify the thermal and structural design. The radio is nominally configured as a transponder, providing a real-time, coherent, full-duplex communications link. Alternate configurations can include a half-duplex transceiver, or a stand-alone transmitter. The transponder configuration, while consuming the most power, allows for a great deal of system flexibility and for some unique capabilities, made possible by coherency. Satellite ranging would be one example of an advanced feature of this type of transponder.

Small size and low power consumption were deemed to be key design drivers for the new transponder. In recent years, these same size and power requirements have been addressed by the commercial cellular telephone industry. For low earth orbits where the earth's magnetic field provides radiation shielding, these same commercial components can be used in space. The use of COTS components wherever possible is highly desirable to reduce both cost and overall development time. Small surface mount electronic components enable a further reduction in package size and power consumption. These surface mount components have become ubiquitous in recent years and are ideally suited to this radio transponder. The result is that the radio consumes only 2 watts of power when in receive-only mode, and less than 10 watts when acting as a full-duplex transponder.

The transponder will make use of an application-specific integrated circuit (ASIC) or a hybrid circuit to combine and consolidate functionality of a number of components onto a single part. This both yields a power savings and enables a smaller mechanical package to be used. AeroAstro has been working with the Systems on Silicon Research Center and the University of Illinois at Chicago on the development of an ASIC that combines the functions of the up/down conversion, modulation and demodulation, and local oscillator.

One key feature of the AeroAstro transponder is the use of a digital signal processing (DSP) technique for maximization of the modulating/demodulating process in the digital domain. The use of DSP allows for a tremendous amount of flexibility and expansion capability, as new software or logic can be easily incorporated to enhance or change the modulation characteristics of the transponder. The DSP solution can also be tailored to specific applications more readily than traditional analog circuitry.

DSP technology has grown in recent years and continues to evolve in the personal communications industry due to the constant desire to improve power efficiency. AeroAstro expects to be able to take advantage of these advancements and incorporate the rapidly evolving new technology into the transponder design. Both modulation and demodulation are incorporated into a modem configuration to make best use of the DSP circuitry. This allows functional sharing of a significant portion of the circuit and processing functions under relatively easily implemented embedded software control.

Radio Subsystems

The DSP-based modulator and demodulator circuit provides an expansion capability and can be adapted to accommodate spread spectrum signals. This flexibility may make possible future compatibility with the DSN, STDN, and TDRSS networks as they are opened up to commercial users.

There is one overbearing drawback to this modulation and demodulation method, however, and that is its relatively high power

consumption. Even with the boom of digital demodulation circuits and techniques developed over the last two years for the highly power-efficient personal telecommunications market, power efficiency has not yet reached the sample rates required of commonly used intermediate frequencies (IF) of 70, 140, and 280 MHz. Additionally, the DSP components are likely to be the most sensitive to radiation, and AeroAstro is investigating the use of a more radiation-tolerant, application-specific field programmable gate array (FPGA) circuit to perform the digital signal processing.

Once the digital signal processing technique was selected, two techniques that utilize IF sampling were evaluated: sampling at the Nyquist rate or under-sampling. Sampling at the Nyquist rate requires a sampling rate of at least twice the IF frequency. For a frequency of 70 MHz, a sample rate of at least 140 msps is required, which consumes a significant amount of power. Under-sampling or "constructive aliasing", is used for down conversion by integer multiples of half or less than the sampling frequency. This technique allows the IF frequency to be sampled at less than the Nyquist criteria for the IF frequency, producing a series of aliased images below the IF frequency. This method also performs a down conversion of the incoming IF signal to a lower frequency, or even to baseband frequencies. However, there is a key drawback in that it produces a number of spectrally reversed, aliased frequencies below the IF frequency that need to be compensated for prior to demodulation. AeroAstro's transpoder will use under-sampling with the maximum uplink rate being 2 kbps.

The use of a DSP for demodulation allows the flexibility to digitally correct for doppler shift in addition to the traditional method of adjusting the tracking window of an internal oscillator to match the doppler-shifted carrier. The DSP will provide control signals to the synthesizer as necessary or when the doppler shift lies outside of the band that can be corrected for with only digital manipulation. The DSP is also able to act as a command decoder unit. Commands to the radio may be sent along with the telemetry stream, and received by the transponder before reaching the host spacecraft's command and data handling system. Similarly, the radio can collect state of health telemetry and performance characteristics and encode them on a downlink stream. These features can help enhance the reliability of the radio and provide a backup command path to the spacecraft. (A system reset command, for example, could be sent to the radio and received and acted upon even if the spacecraft command and data handling system were locked up.)

The transponder provides throughput rates on both the uplink and downlink that meet the needs of small spacecraft. Due to the nature of spacecraft communications, the uplink rate does not need to be as fast as the downlink rate, and the X-Band radio can accommodate between 1 kbps and 4 kbps uplink rates. A moderate downlink data rate in the range of 10 kbps to 750 kbps was chosen to balance the needs of the spacecraft and science objectives with the need for an adequate link margin at any point in an elliptical orbit. This downlink rate is achieved through the use of bi-polar shift keying (BPSK). Alternate encoding methods were considered, but BPSK offered superior Bit Error Rate (BER) of 1e5 for an Eb/No of 9.6 dB, along with good spectral efficiency. In addition, BPSK is also compatible with the majority of present day ground station equipment. The transponder provides room for expansion through the use of alternate modulation schemes such as QPSK or specialized, ground station-compatible, patented modulation formats.

With BPSK being the chosen modulation format, it was understood that additional circuit complexity would be introduced over other modulation formats. By choosing BPSK, a certain level of complexity is levied on both modulation and demodulation. With this added complexity in mind, analysis needed to be performed to identify methods of reducing mass and power consumption. After further investigation, it was decided that medium and highly integrated circuits could be used to perform the functions of modulation and demodulation, which compress the circuitry and thus reduce volume and mass. This highly integrated circuitry will be custom designed, using COTS dies and components.

To meet the low power requirements of small spacecraft, the radio is designed to operate on a low voltage of between 5 VDC and 7.2 VDC. The ability to operate on a low voltage helps enable the use of low voltage throughout the spacecraft. This flows through the system design and makes low voltage power sources (batteries and solar panels) possible. This results in a further mass and size savings to the spacecraft. Today's small spacecraft are transitioning from the traditional 28 VDC bus voltage to newer 12 VDC, 7 VDC, and 5 VDC bus voltages. The low voltage of the radio is also desirable so as to take advantage of the wide array of low-cost commercial telecommunications components available today.

A 1.5 watt transmitted power is baselined for the radio. This power represents a compromise between the link margin requirement and the need for low power consumption. To be suitable to use on small spacecraft, the total power consumed by the radio needs to be less than 10 watts. A 1.5 watt output power is a convenient level for which a number of commercial components are made.

An X-Band power amplifier that would fulfill the needs of developing up to 2 watts of power from a 7.2 VDC source also received serious consideration. In order to develop a suitable power amplifier, configurations that could deliver from 100 milliwatts up to 2 watts were investigated. The reason for considering power levels greater than the 100 milliwatts was that this power level is barely adequate out to 3-5 earth radii (Re), even with very low link margins and a 10-meter earth station. For this reason, amplifiers with higher power levels were investigated. To achieve the power levels desired, a scheme based on a divider/combiner configuration is needed, making good use of lower power GaAs amplifier devices presently available. When combined, these low power devices yield significantly higher gain. Also used is a modularly selectable power amplifier that provides up to 2 watts, using COTS components and die, fabricated in a hybrid configuration.

The radio, as designed, provides only minimal radiation tolerance. This is consistent with the relatively benign radiation environment (less than 10 kRad) found in low earth orbits. Additional radiation tolerance can easily be achieved through the use of shielding in the mechanical housing, but at the cost of additional mass. The FPGA digital signal processing circuit is specifically designed to handle SEU and latchup events and withstand up to 60 kRad. The RF analog circuitry, the majority of which is GaAs based and has large junctions, is not highly sensitive to the lower to medium radiation dosage. Parts which are susceptible, or which show sensitivity to dosage were specifically not used. The frequency standard, or internal oscillator, is being characterized to determine its sensitivity to dosage.

The internal synthesizer can be tuned in frequency to allow this transponder to operate

over the entire X-Band. This flexibility makes this radio suitable for a wide range of missions with minimal or no changes. AeroAstro is already planning to use this radio in several small spacecraft missions.

Custom up-conversion and down-conversion circuitry is used in the transponder. There exist COTS up and down conversion circuitry that can be easily fabricated in any form chosen. Almost all of the components to serve in the up/down conversion design are available as items that have been developed for personal communications projects, such as mixers (both active and passive), gain blocks that accept automatic gain control (AGC) as a digital or analog signal, and surface acoustical wave (SAW) filters suitable for hybrid construction.

The low noise amplifier (LNA) will consist of a GaAs FET device. Although a critical item in the receiver's design, due to the availability of COTS components and designs, the LNA was not considered to be a developmental item. COTS technology should deliver a noise figure of less than 3 dB at X-Band, with a fairly low current consumption.

AeroAstro has been working on the development of an X-Band diplexer, which would be critical should the radio take the form of a full transponder. The diplexer is a small component with dimensions of approximately 1.6 x 2.5 x 4.1 cm and a maximum mass of 60 g. The insertion loss is less than 1.0 dB, with a flatness of 0.2 dB over the receive and transmit channels. VSWR is a maximum of 1.4:1 over the diplexer's full bandwidth.

There is room in the diplexer design for further mass reduction through use of a metalized ceramic construction. However, it will be difficult to reduce its volume further without affecting the diplexer's required minimum 60 dB of isolation. The diplexer is compatible with several alternate packaging and mounting scenarios, including being integrated along with the power amplifier, and LNA, into a single unit optionally co-located with an antenna. This integration can help reduce transmission line losses, maintain a more consistent match with the antenna, and reduce the VSWR losses introduced by the connectors that would normally be required of transmission line interconnection.

Summary and Conclusions

The most noteworthy innovative features of AeroAstro's X-Band transponder are its small size, low mass, low power consumption, quick delivery, and low cost. These features are made possible by the design which uses commercial off-the-shelf components pulled from the wireless communications industry, by the digital modulation and demodulation performed by the DSP, and by the use of an ASIC circuit to combine the up/down conversion, modulation and demodulation, and local oscillator onto one circuit.

The transponder represents the next logical step in earth-to-space communications. It pulls from the wealth of small, low power commercial components developed in recent years by the wireless communications market. By expanding into the higher frequency X-Band, the transponder is uniquely positioned to take advantage of the frequency allocations now being made available and to best make use of the commercial ground stations that are just now starting to support this band.

AeroAstro's development of this inexpensive, lightweight, power-efficient transponder will enable a variety of future micro and nanospacecraft missions that would otherwise not be feasible due to restrictive cost, mass, and power constraints.