Autonomous Operations Experiments For the Distributed Emerald Nanosatellite Mission

Christopher Kitts[†] and Michael Swartwout[††]

[†]Intelligent Robotics Program, Santa Clara University
Space Systems Development Laboratory, Stanford University
500 El Camino Real, Santa Clara CA 95053
Phone: (408) 554-4382, Fax: (650) 340-9691, E-mail: ckitts@scudc.scu.edu

[††]Department of Mechanical Engineering, Washington University in St. Louis
Campus Box 1185, St. Louis MO 63130
Phone: (314) 935-6047, Fax: (314) 935-4014, E-mail: mas@me.wustl.edu

Abstract. Distributed space systems are often cited as a means of enabling vast performance increases ranging from enhanced mission capabilities to increased system flexibility. Achieving this vision, however, will require radical advances in the automated control of these multi-satellite systems. To explore this challenge, Santa Clara University and Stanford University have initiated development of a simple, low cost, two-satellite mission known as Emerald. The Emerald mission includes several experiments involving the autonomous operation of distributed space systems. First, "low-level" inter-satellite navigation techniques will be explored. Second, "high-level" multi-satellite health and command management functions will be demonstrated. Due to operational considerations and on-board computational constraints, autonomy functions will have both on-board and ground components. Technology verification and validation will be conducted by the execution of a precise functional test plan and by assessing how these capabilities improve a baseline scientific investigation involving lightning-induced atmospheric phenomena. This paper will discuss Emerald's mission objectives and design as well as the suite of "high level" autonomous operations experiments to be performed.

Table of Contents

1. Introduction
2. The Emerald Mission
3. Autonomy Experiments
4. Summary and Conclusions
5. Acknowledgements

1. Introduction[1]

Distributed space systems are multi-satellite systems that work together in order to perform a unified mission. Such systems are an alternative to monolithic satellite missions in which all on-orbit activities are performed on a single platform. Distributed space systems can range from global constellations offering extended service coverage to clusters of highly coordinated vehicles that perform distributed sensing. While the former manifestation has proved successful for many communications, navigation, and remote sensing systems, the capabilities and value of the latter version are still largely unexplored. It has been postulated, however, that tightly coupled fleets demonstrating formation flying and autonomous operation capabilities will have a significant impact on many scientific, military, and commercial space applications for surveillance, synthetic aperture radar earth mapping, magnetosphere sensing, interferometry, and other missions.

[†] Research Assistant Professor, Dept. of Mechanical Engineering, Santa Clara University; Lecturer, Dept. of Aeronautics and Astronautics, Stanford University.
[††] Assistant Professor, Dept. of Mechanical Engineering, Washington University in St. Louis

Proponents of this emerging vision point to several potential benefits. In addition to providing redundancy, increasing capacity, and extending availability, these systems may offer on-orbit flexibility, agility, reconfigurability, and graceful constitution/degradation. Their collective intelligence would permit the collaborative provision and fusion of mission services. Although not required, this vision often postulates the use of relatively small spacecraft with the hypothesis being that a fleet of precisely controlled small spacecraft can provide more value than a single, conventional, monolithic satellite. The use of numerous small spacecraft raises the additional potential benefit of achieving economies of scale in the development of the space segment.

While still notional in many respects, this vision generally attempts to exploit advances in system control techniques in order to gain orders of magnitude performance increases in service value, cost, and timeliness. Typical examples of the types of advanced control techniques required for achieving this vision include:

- Precision guidance services such as relative on-orbit positioning and attitude control.
- Robust health management services capable of efficient anomaly detection and fleet-level response.
- Efficient fleet processing services capable of intelligently responding to goal-level directives, reacting to interesting events, and extracting mission-specific products.

A variety of research programs are actively targeting these technology areas in support of the stated vision of distributed space systems. This work ranges from the artificial intelligence techniques developed by the NASA New Millennium Program (NMP) to the formation flying initiatives sponsored by the Air Force Office Of Scientific Research (AFOSR) Techsat 21 program.

One of the TechSat 21 initiatives, known as the University Nanosatellite Program (UNP), involves the development of ten low-cost university spacecraft. Jointly sponsored by the Defense Advanced Research Projects Agency (DARPA), these projects are intended to explore the military usefulness of nanosatellites; particular missions of interest include technology development experiments supporting formation flying, enhanced communications, miniaturized sensors, attitude control, maneuvering, docking, power collection, and end-of-life de-orbit. Each university in the Nanosatellite Program is funded at a level of $100,000 to develop a spacecraft over a two-year period. Additional funding is being provided by NASA Goddard Space Flight Center (GSFC) in order to support work related to distributed control technologies. In addition, most of the UNP spacecraft will be launched from the Space Shuttle.

The missions that compose the University Nanosatellite Program include the following: Constellation Pathfinder (Boston University), Solar Blade (Carnegie-Mellon University), 3 Corner Sat (Arizona State University, the University of Colorado, and New Mexico State University), ION-F (the University of Washington, Utah State University, and Virginia Tech), and Emerald (Stanford University and Santa Clara University).

2. The Emerald Mission

Emerald is a joint Stanford University – Santa Clara University mission consisting of two satellites with a mission to explore robust distributed space systems. Both Stanford's Space Systems Development Laboratory (SSDL) and the Santa Clara Intelligent Robotics Program have successful, established programs in low-cost spacecraft design. Each has a small satellite program for producing low-cost, rapidly developed spacecraft for testing new technologies and/or performing simple science missions. Each program is structured such that students are responsible for managing and engineering the entire mission. In addition, each program relies on re-engineering commercial components not typically used for space applications. Professional oversight, industrial mentoring, and emphasis on verification testing are used to address the elevated risks inherent in these approaches. Between these two laboratories, several flight-ready spacecraft have been developed.

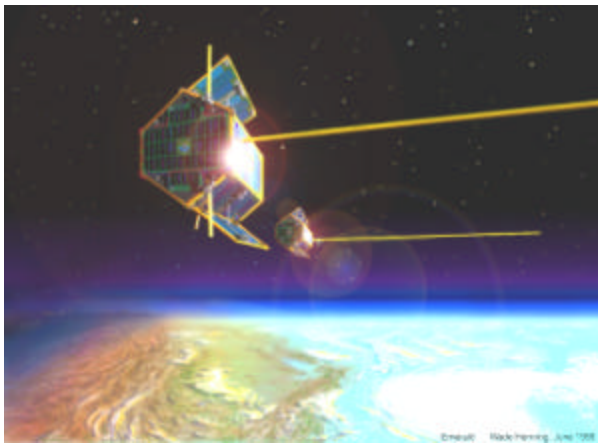

Figure 1. *The Emerald formation [Henning]*

Mission Objectives

Conceptually depicted in Figure 1, the Emerald mission will further understanding of robust distributed space systems in several ways. These include performing several flight experiments, providing general experimental services for auxiliary investigations, and conducting several studies regarding low-cost satellite design. Specific flight experiments include the following demonstrations.

Component verification: Several components will be tested for their operation in the space environment. These include a modified 12-channel Mitel GPS receiver and a newly developed colloid microthruster.[2] In addition, an electronics testbed system will support chip-level performance testing for commercial transistors, memory chips, and other components.[3]

Formation flying: Precision, sub-meter relative position determination will be achieved on-orbit through the exchange of GPS data via an inter-satellite communications link. In addition, on-orbit navigation algorithms will compute position control directives.[4] These will be used to direct low-authority position control actuators consisting of drag panels and the experimental colloid microthrusters. The result will be coarse but predictable relative orbital motion.

An exciting joint flight opportunity will include three-body formation flying with the Stanford University Orion-1 satellite. Orion-1 is a flight prototype for the planned 6-satellite Orion constellation currently being developed by Stanford and the NASA Goddard Space Flight Center. Orion-1 is a 50 kilogram, 50 cm x 50 cm x 50 cm cube vehicle with 3-axis control, cold-gas thrusters, and a higher performance GPS receiver.[5] Compared to the navigation capability of the Emerald spacecraft, Orion has far more processing power and control authority thereby allowing it to fly in a tightly controlled manner with either or both of the Emerald satellites.

The primary navigation technique is being developed by doctoral students working on the Orion program. A secondary navigation demonstration will use the GSFC decentralized control algorithm in order to gain initial flight experience with decentralized fleet management strategies.[6] In addition, the AI Solutions FreeFlyer® suite of software will be used on the ground in order to produce relative navigation control directives.

Autonomous System Operations: An on-board expert system will execute model-derived analysis rules in order to provide robust anomaly management. Also, an on-orbit execution system will provide intersatellite command synchronization and planning. This will enable fleet-level commanding (i.e. a single high-level command to the fleet will cause coordinated fleet activity) and opportunistic science (i.e. the satellites will be able to detect "interesting" science events and react by commencing coordinated data collection activities). In addition, a distributed beacon system will validate methods of providing low-cost anomaly notification for clusters of spacecraft. Finally, advanced ground segment control techniques will be used for mission planning, execution, and analysis. These autonomy demonstrations are described later in this paper.

VLF Science: Distributed sensing of lightning-induced Very Low Frequency (VLF) radio emissions will support a variety of science studies relating to lightning and to the structure of the ionosphere.[7]

Spacecraft Design

In order to achieve this mission given the limited time and resources, the design of the Emerald satellites is largely based on heritage SSDL designs as well as on purchased space qualified components.

The structural configuration for the Emerald vehicles uses SSDL's existing satellite bus design. This consists of a 15 kilogram, 14-inch tall, 16-inch diameter hexagonal configuration employing a modular, stackable tray structure made of aluminum honeycomb. Figure 2 depicts assembled and exploded views of this configuration. Drag panels will be incorporated into this design by actuating two side panels.

For command and data handling, the Emerald satellites uses the commercially available SpaceQuest FCV-53 flight processor as its central computer; this component runs the BekTek operating system and student-developed application software. Together, this provides a radiation tolerant system with 1 MB RAM, a file system, and a schedulable command system. Using an Inter-Integrated Circuit (I^2C) serial bus, this processor coordinates a network PICMicro® microcontrollers for subsystem control.

A UHF, half-duplex, 9.6 kbs packet communications system is being used. This includes a SpaceQuest digital modem and a modified amateur radio transmitter and receiver. This system is used for both inter-satellite communications as well as for spacecraft to ground communications. A secondary VHF receiver is included for redundancy and to enhance the use of the satellites by amateur radio enthusiasts.

The power subsystem includes donated solar cells which are body mounted on each of the satellite's eight sides. A single multi-cell NiCad battery is included, and regulated 5-volt and 12-volt power is provided throughout the satellites. Coarse attitude determination on the order of +/- 5 degrees, suitable to meet mission objectives, is provided with a magnetometer and simple visible/infrared light sensors. Attitude control is achieved through the use of a single torque coil an the 3-meter VLF antenna, which acts as a drag stabilization mechanism. Passive thermal control is achieved through the use of insulation and thermal coatings.

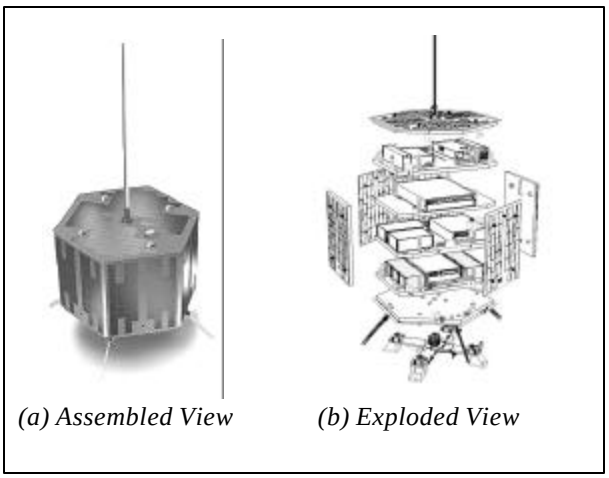

Figure 2. *The Heritage Satellite Configuration*

Payload components, discussed earlier in this paper, include the following: a GPS receiver and VLF instrumentation on both satellites, a radiation testbed on one satellite, and a colloid microthruster on one satellite. Both satellites include navigation and autonomy software. Figure 3 shows a system-level diagram of the satellite components.

Mission Operations

The Emerald satellites will be launched from the Space Shuttle's Shuttle Hitchhiker Ejection Launch System (SHELS) with the Stanford Orion-1 microsatellite. The Emerald satellites will be stacked with one on top of the other. The Emerald stack and the Orion-1 vehicle will be connected to a baseplate which, in turn, will attach to the SHELS platform by a Marmon clamp.

When ready to deploy, the entire baseplate will separate from the Shuttle. After safe separation from the vicinity of the Shuttle, the the Emerald stack and the Orion-1 vehicle will be ejected in close proximity in order to minimize differences in orbital trajectories. Vehicle checkout and some initial flight experiments will be performed prior to separating the Emerald stack. When ready, the Emerald stack will separate.

Command and control of the Emerald spacecraft will be conducted through a global space operations network that is being established as part of the Stanford and Santa Clara research programs in space system operations. This system consists of a network of amateur radio communication stations linked via the Internet. A centralized mission control complex provides conventional and advanced control capabilities for processing mission services and maintaining system health. The overall mission architecture is pictured in Figure 4.

Student Design Team Management

The team's development approach integrates Stanford graduate students and Santa Clara undergraduate students into a single design team responsible for both spacecraft. Student participation is conducted through established academic classes. As part of their thesis work, a small number of graduate students at each school serve as researchers on Emerald flight experiments or as engineers for particularly demanding design/analysis tasks .

The physical proximity of Stanford University and Santa Clara University allows daily person-to-person interaction, the sharing of facilities, and an integrated development effort. Web-based project documentation, e-mail communications, and teleconferences permit distributed access and review of technical aspects of the project.

Schedule

The Emerald team is using a schedule-driven management strategy in order to scope technical complexity and payload integration. Significant schedule slips are controlled by the removal of experiments from the mission as well as by the

termination of subsystem enhancements. The program successfully completed a Preliminary Design Review in January 2000, which resulted in its selection as the first UNP Space Shuttle flight. A NASA Safety Review and a Critical Design Review are currently scheduled for Fall 2000. Delivery of the vehicles is currently scheduled for Summer 2001, and the earliest possible launch opportunity is November 2001.

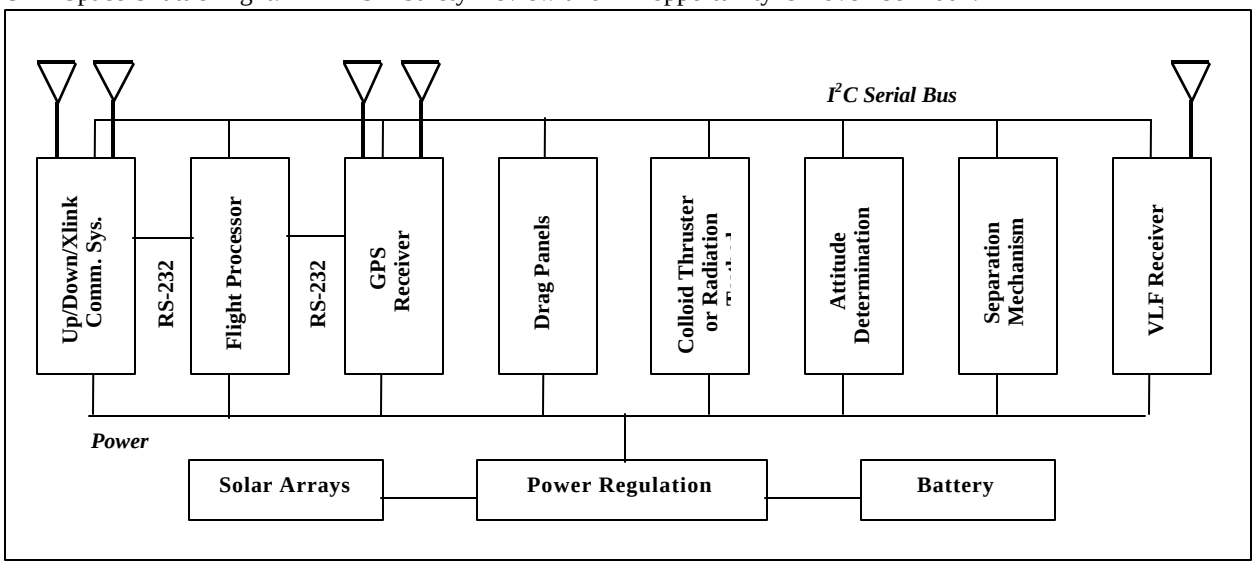

Figure 3. *The Emerald System Diagram*

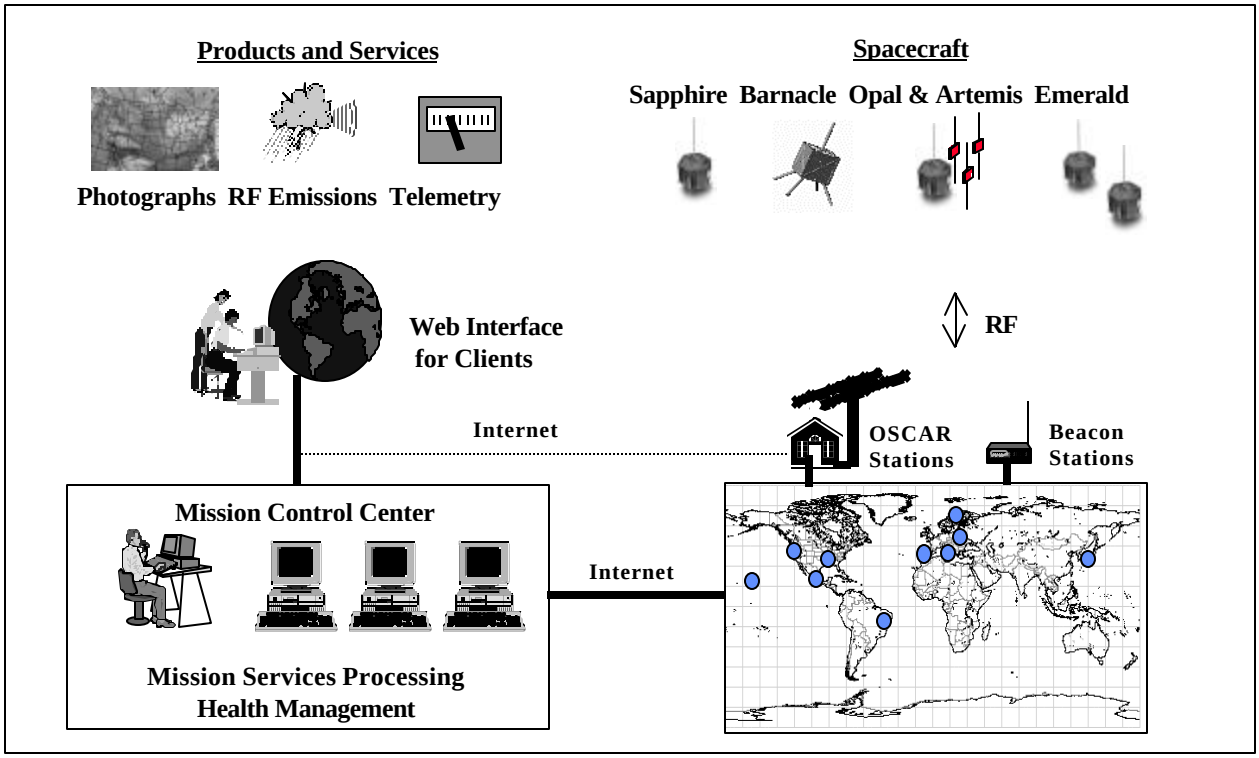

Figure 4. *The Mission Control Architecture*

3. Autonomy Experiments

The Emerald mission incorporates autonomous functionality at several technical levels. At the lowest level, formation flying algorithms provide relative position determination and control. The Emerald mission will serve as a testbed for several automated navigation approaches (centralized and decentralized) and implementations (on-board and ground based). Higher level control strategies address issues such as anomaly management and command planning/execution; these latter topics are the subject of this paper.

Anomaly management

The Emerald anomaly management system is designed in several layers. Major elements include an on-board production rule system for real-time analysis and reaction, a health message beacon system for cost-effective anomaly notification, and advanced ground segment telemetry analysis software for high-fidelity anomaly detection, diagnosis, and recovery operations.

Production rule system. The production rule system will provide a simple but effective way for the spacecraft to reason about its state and to take appropriate action. The authors' previous work with such systems has proved to be highly effective for the Stanford University Sapphire microsatellite.[8]

The production rule system allows the on-board agent to draw inferences through the use of "if-then" rules. By analyzing telemetry in this manner, significant information regarding the health state of the vehicle may be inferred. In addition, appropriate actions (such as implementing a low power mode) may be executed in a timely manner based on this health state. Non-health related actions may also be encoded in order to provide flexible and efficient spacecraft state control.

Several possible innovations are being considered for the Emerald production rule system. First, hysteresis and persistence may be incorporated as primitive variables in the rule syntax.[9] Second, while productions rule systems typically encode experiential data, the Emerald mission is considering the addition of formal model-based reasoning techniques as a means of developing analysis rules. It is hypothesized that these techniques will provide a more flexible and robust capability to reason about anomalies.

Health message beacon system. Beacon monitoring is an architecture for providing timely and cost-effective operator notification of an anomaly once it has been detected by an on-board telemetry filter. Several implementations of this architecture have been proposed and/or experimentally implemented by the Air Force and NASA .[10, 11]

The Emerald beacon architecture will be similar to that previously developed by the authors for the Sapphire mission. In this architecture, the on-board production rule system infers an aggregate health status for the overall satellite system. This health status value is periodically broadcast by the Emerald communication system to a network of low-cost, automated, receive-only monitoring stations.[12] Using Internet connectivity, these stations forward the health assessment messages to a centralized mission control center, which logs activity and initiates any required actions. For example, in the event of a satellite emergency, an on-call operator is paged and a new satellite contact is automatically scheduled. This general architecture is depicted in Figure 5a.

Using the Sapphire satellite, ground-based hardware-in-the-loop testing has been used to verify and validate this beacon operations system. Controlled, double-blind, end-to-end experiments have compared the performance of a conventional operations approach to that of beacon operations for a series of real, injected satellite anomalies as well as for several unplanned anomalies. Holding cost relatively the same, the experimental results repeatedly show that timeliness is drastically improved and confidence for beacon operators is strictly greater than or equal to that of conventional operators;[13] these system-level performance metrics may be traded against each other in order to reduce cost.

Experience with beacon monitoring for a single satellite has naturally motivated the question of its applicability to multi-satellite systems. This usefulness will be evaluated as part of the Emerald mission. In particular, the two multi-satellite configurations depicted in Figures 5b and 5c are being considered.[14]

First, a satellite's beacon signal may be received and used by other satellites in the fleet in addition to having it be used by the ground segment. A number of beneficial uses for this information may exist. For example, the existence of a major anomaly that prevents payload operation on one satellite could be

communicated to other spacecraft in the fleet. Without knowing any other details of the anomaly, the other satellites could intelligently react to this situation. For example, another satellite might perform the payload operations of the anomalous satellite thereby fulfilling the role of a redundant unit. Alternatively, if the fleet was performing a collaborative activity requiring all satellites, the fleet could conserve resources by canceling the activity.

A second application of a distributed beacon system involves using a space-to-ground beacon signal to represent the health or operational mode of the entire space segment. To achieve this, the satellites exchange health data, a fleet-level health message is derived, and this message is broadcast to the ground in order to trigger any necessary actions. An example of this related to formation flying is to invoke a ground-based navigation system if the on-orbit relative navigation system becomes non-operational (due to an equipment failure, a poor inter-satellite communications link, a limited power condition, etc.).

Ground segment telemetry analysis. With additional computational power available within the ground segment, advanced telemetry processing algorithms will be tested for anomaly detection, diagnosis, and recovery tasks.

Since its inception, the space community has relied almost exclusively upon experiential approaches to anomaly management. In this strategy, reasoning is based upon a collection of heuristics, intuitions, and past experiences. This style of knowledge base represents the fundamental design and behavior of the system in a very weak manner. Anomaly management is implemented by comparing the system's observed behavior with experiential entries in the knowledge base that concern health status, anomalous parts, and response criteria; knowledge is often catalogued in a variety of procedures, preprogrammed diagnostic tests, pre-specified fault models and dictionaries, and decision trees. Successful application of such systems relies heavily on the training and experience of human operators, the accuracy and timeliness of the knowledge base, and the knowledge base's span of environmental conditions and operational modes.

Without denying the benefits of experiential knowledge and the robustness of human reasoning, the authors believe that the development and use of more formal reasoning approaches will contribute to the capabilities of automated anomaly management systems. For the Emerald mission, model-based reasoning techniques are being developed. Model-based reasoning, also known as reasoning from first principles, relies on a formalized, composable, mathematical model of a system; this description captures the behavior of components as well as their input/output connectivity. In addition, model-based reasoning uses inference algorithms that are independent of system attributes. For anomaly management, these algorithms detect symptoms, isolate malfunctioning components, and prescribe recovery actions. For this program, research work is being conducted in order to extend current model-based approaches to a wider class of anomalies and to identify suitable reconfiguration options based on first principles.

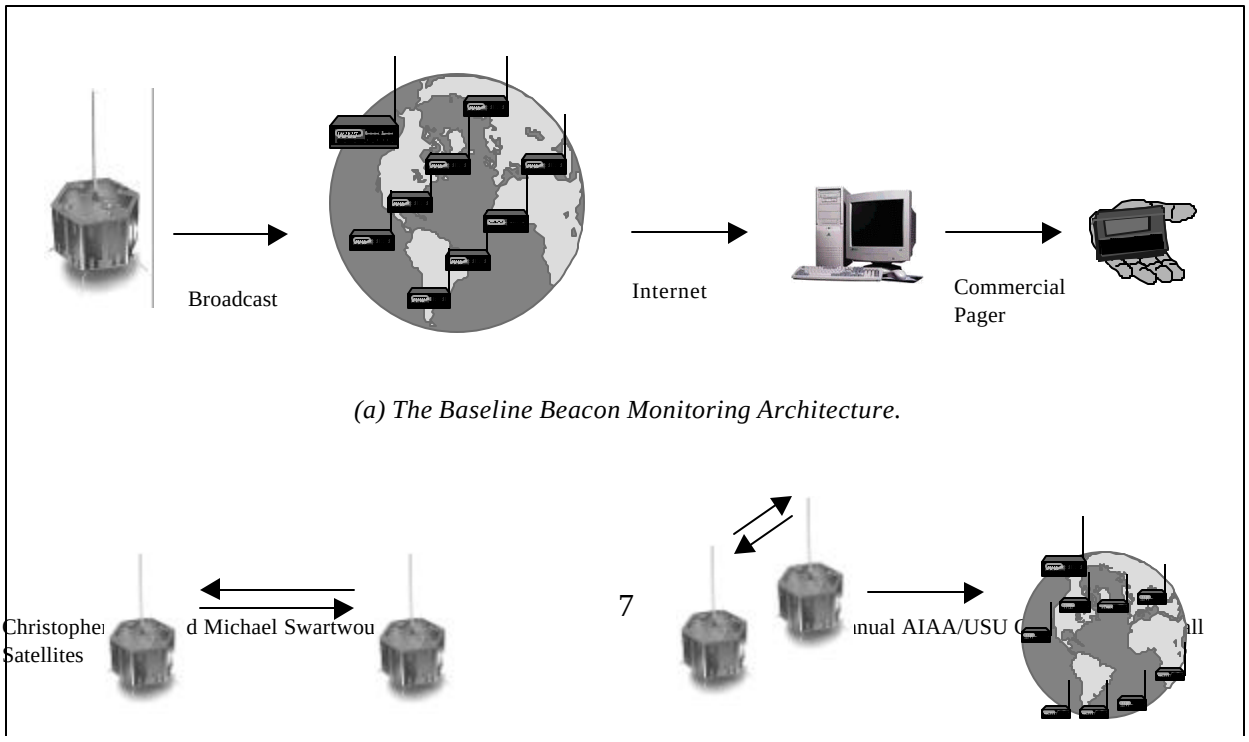

(a) The Baseline Beacon Monitoring Architecture.

(b) Intersatellite beaconing (c) Fleet beaconing

Figure 5 – *Multi-Satellite Beacon Monitoring Configurations.*

Command planning and execution

As with the anomaly management system, the Emerald command planning and execution system is designed in several layers. Major elements include an on-board distributed computing architecture, a simple but effective space segment collaboration framework, a distributed ground segment operations architecture, and a ground-based command planning capability.

Distributed Computing Architecture.[15] The Emerald satellites use a commercially available, radiation-tolerant computer as their central flight processor. At the subsystem level, PICMicro® microprocessors handle real-time processing and configuration control of component operations. This network of computers is connected via a synchronous serial data bus using the I^2C communication protocol. The overall data bus scheme uses many layers of the standard I^2C protocol as well as student-developed methods for detecting errors and acknowledging messages. A library of standard commands exists for all subsystems; these include functions for checking subsystem status, synchronizing time, and a variety of other tasks.

The standard technique for commanding satellite activity involves transmitting a task level command to the spacecraft. This command is received by the central flight computer which, in turn, decomposes this command into primitive commands for the affected subsystems. These subsystem-level commands are then forwarded to the subsystem microprocessors for execution. In effect, this strategy enables batch-level commanding that is abstracted from the spacecraft's design implementation.

An attractive feature of the command system is that, while commands will often originate from the ground, any authorized control agent may issue commands. Therefore, the Emerald satellites will be able to respond to ground controllers, to other spacecraft such as the partner Emerald or the Orion-1 satellite, and to software tasks executing within the spacecraft itself. Furthermore, the distributed computing architecture provides the capability for an external control agent to bypass the main flight computer thereby enabling it to communicate subsystem-level commands directly to the subsystem microcontrollers. This adds an enormous amount of flexibility and anomaly tolerance to the overall command and control system.

Space Segment Collaboration. While the distributed computing architecture focuses primarily in intra-satellite processor interaction, its guiding principles are just as applicable to inter-satellite interaction. These principles are being put to use in order to enable two specific capabilities that will greatly impact the cost-effectiveness of the Emerald VLF science mission.

The VLF mission involves the reception of radio waves that are naturally emitted by lightning. The reception of these waves is of interest in two ways. First, there is significant interest in the ability to monitor global lightning activity, to estimate the energy lightning imparts to the atmosphere, and to pinpoint the location of lightning strikes. Second, the lightning can be thought of as a natural and powerful forcing function that excites the Earth's ionosphere. Ionospheric behavior in response to this forcing function yields information concerning the structure of the ionosphere; understanding this structure is crucial to Earth scientists as well as to communications engineers.

Monitoring radio emissions from space provides additional data of great interest to ongoing ground-based studies of these phenomena. More importantly, additional value can be gained by simultaneously monitoring the same radio emission from two close but distinct points in space.

Emerald will address these science issues by attempting to implement and evaluate two operational capabilities.

The first capability is fleet-level commanding. Related to the VLF objectives, this involves sending a single command to either Emerald in order to have both vehicles record VLF data at the same time. This capability essentially requires synchronization functions between the two spacecraft. To implement this, the distributed computing architecture's communication protocol will be extended to handle time and command synchronization for each satellite through the use of the intersatellite communications link.

The second capability is opportunistic science. This level of functionality allows scientists to handle unpredictable environments by commanding a satellite to automatically initiate payload operations whenever something "interesting" occurs. Instead of associating a command with a specific execution time, opportunistic commanding involves a syntax that includes the command, a "period of opportunity", and an "interest criteria". Execution of this command occurs in the following manner:

- At the beginning of the specified "period of opportunity", the satellite initiates processing in order to assess whether or not the "interest criteria" is met. For the VLF mission, this will involve receiving VLF emissions and checking to see if energy peaks (associate with lightning strikes) meet or exceed thresholds for parameters such as intensity and frequency.
- This monitoring process continues until either the "interest criteria" is met or the "period of opportunity" expires.
- If the "interest criteria" is met, then the command is executed. For the VLF mission, this involves actually recording VLF data for future download and analysis.
- Opportunistic commanding may be combined with fleet-level commanding in order to have the entire fleet react to an interesting science opportunity. For the VLF mission, this would involve the synchronization of VLF data collection upon meeting the "interest criteria".

It is hypothesized that fleet-level commanding and opportunistic commanding will improve the cost-effectiveness of science operations in several ways. First, fleet-level commanding will reduce the amount of personnel time and space-to-ground communications link time required to support fleet commanding; these factors are significant cost drivers.[16] Second, the ability to react appropriately to the environment, which is enabled by opportunistic commanding, will improve the quality of science data when small amounts of timing uncertainty exist. Third, opportunistic commanding opens up the possibility to collect science data efficiently during mission phases when the probability of "interesting" events is unknown. Although this benefit affords little value for VLF science, it is a crucial aspect of future autonomous missions envisioned by NASA's NMP.

Ground segment architecture. Since 1995, the authors have been involved with development of a semi-automated mission control architecture capable of supporting operations for a variety of university microsatellites.[17] This architecture, depicted in Figure 4, is being improved and extended for the Emerald mission. It consists of a centralized mission control complex and the ability to remotely control a network of globally distributed communication stations. Internet communication is used between ground segment facilities, and amateur radio links are used for the space-to-ground link.

The Mercury groundstation control program is a primary component of the mission control architecture. The Mercury system allows for computer control of station equipment.[18] This allows components to be powered, antennae to be pointed, transceivers to be tuned, etc. It also allows spacecraft commands and telemetry to be routed through the communications equipment. The Mercury system allows control to be achieved by a human operator or an automated software program. The location of the control agent may be at the groundstation or, through the use of Internet connectivity, at a remote site such as the mission control complex or the operator's residence. A command planning system, discussed in the next section, will be interfaced with the Mercury program in order to automate many of the Emerald operational tasks.

As an alternative to a university-developed mission operations system, control of the Emerald mission will also be implemented from a separate, professional-grade, mission control center. Sponsored by the National Science Foundation (NSF), the Santa Clara Distributed Robotic Control Center is a new facility being developed to support the distributed operation of a variety of robotic systems to include satellites, rovers, airships, undersea vehicles, telescopes, etc. For its core command and telemetry processing functionality, the center will use commercially available, industry-standard systems. By relying on widely accepted and well-supported software for infrastructure tasks, researchers will be able focus on advanced toolboxes specific to the

autonomy technology of interest. An objective of the Distributed Robotic Control Center is to allow external researchers to install their innovative toolboxes in order to provide real-time validation of their technology.

Command planning. Two specific automated capabilities for Emerald's ground-based command planning system are currently under development.

First, the Emerald team is hoping to automatically generate appropriate time parameters for VLF science commands (to include parameters required for both the standard and the opportunistic command syntax). To achieve this, a National Oceanographic and Atmospheric Agency (NOAA) Regional and Mesoscale Meteorology Team Advanced Meteorological Satellite Demonstration and Interpretation System (RAMSDIS) workstation is being installed in the Santa Clara University mission control center. This workstation will permit the real-time acquisition of high-fidelity global weather information and the ability to predict lightning/storm activity into the near future. The output of this analysis will be used to specify the time parameters for scheduled VLF operations.

Second, a "service-level" command planning system is being developed. This computational framework will allow task-level commands (suitable for upload to the satellites as described in the Distributed Computing Architecture section of this paper) to be automatically derived from conceptually phrased operational requirements.[19] For example, a scientist can simply ask for VLF data collected over the South Pole anytime in the next week. The command planning system can then compute the relevant task-level command lists with a full range of options for VLF collection time, command upload and data download times, satellite to be used, etc. A simple prototype of this system has already been implemented and demonstrated for the Sapphire satellite.

Service-level commanding enables several operational benefits. First, it frees the scientist or user from needing to know specific design and implementation details in order to specify realistic requirements. Second, its formalization supports automation which allows for rapid and correct derivation of possible ways to provide the overall service. Third, flexibility is achieved because the service-level to task-level transformation is typically a one-to-many function; therefore, a variety of possible task plans may be generated which, in turn, benefits the operational planning process in a multi-satellite, multi-groundstation mission architecture.

Technology Verification and Validation

Once operational on the Emerald engineering models, the suite of autonomy services will be verified through the execution of a carefully formulated ground test plan. The behavior of the system will be evaluated and compared to design specifications to ensure that the algorithms are functioning as expected; new algorithms may be installed in order to correct any deficiencies. Once in orbit, a similar methodology will be used verify algorithm operation.

In order to validate the effectiveness of the innovations, a comparative evaluation process will be used. This will be done by simultaneously operating the mission with both conventional and autonomous techniques. While doing this, system-level validation metrics will be measured. These metrics will include cost (i.e. cost of infrastructure, cost of operational personnel, cost of bandwidth, etc.), timeliness (i.e. time to respond to anomalies, to develop command plans, etc.), and value (i.e. confidence in system state of health, quality and throughput of science products, etc.).

4. Summary and Conclusions

The Stanford – Santa Clara Emerald mission will contribute to the development, verification, and validation of advanced autonomy technologies related to distributed space systems. Demonstrations will include advanced approaches for managing anomalies and for planning and executing operational tasks. These functions will be implemented by a combination of on-board and ground segment software. Verification and validation of the technologies will be conducted through the execution of a precise functional test plan and by assessing how the innovations impact overall mission performance metrics. Although simple in concept, this project serves as a valuable prototype for more advanced multi-satellite missions being developed by AFOSR, NASA, and other space agencies and companies.

As is being demonstrated by the TechSat 21 UNP, university spacecraft are a valuable alternative available to space system researchers. These vehicles serve as low-cost albeit risky platforms that may be used to rapidly verify the capabilities of advanced technology. In addition, such projects often lead to innovative design approaches, and they successfully promote the education of a new generation of aerospace engineers.

5. Acknowledgements

The authors are grateful to the joint Santa Clara University – Stanford University student design team for their dedication in the development of this mission.

In addition, the authors wish to thank Mr. Jay Wyatt, Mr. Gregg Swietek, Dr. Larry Capots, Mr. Mark Gersh, Prof. Robert Twiggs, and Mr. James Cutler for their feedback in the development of the technology discussed in this paper.

Funding for the Emerald program is being provided by AFOSR, DARPA, and GSFC. Funding for the autonomy research work is being provided by NSF, NOAA, the Lockheed Martin Corporation, and the Santa Clara University Technical Steering Committee.

References

[1] Kitts C., Pranajaya, F., Townsend, J. and R. Twiggs, "Emerald: An Experimental Mission in Robust Distributed Space Systems." Proceedings of the 13th Annual AIAA/USU Conference on Small Satellites, Logan, Utah, August 1999.

[2] Pranajaya, F., "Progress on Colloid Micro-Thruster Research and Flight Testing." Proceedings of the 13th Annual AIAA/USU Conference on Small Satellites, Logan, Utah, August 1999.

[3] Bourdage, B., "The Micro Electronics And Radiation In-flight Testbed (MERIT) Experiment." Submitted to the 14th Annual AIAA/USU Conference on Small Satellites, Logan, Utah, August 2000.

[4] Robertson, A., Inalhan, G. and J. How, "Spacecraft Formation Flying Control Design for the Orion Mission." Proceedings of the AIAA Guidance, Navigation and Control Conference, Portland, Oregon, August 1999.

[5] How, J., Twiggs, R., Weidow, D., Hartman, K. and F. Bauer, "ORION: A Low-Cost Demonstration of Formation Flying in Space Using GPS.," AIAA/AAS Astrodynamics Conference, August 1998.

[6] Carpenter, J., "A Preliminary Investigation of Decentralized Control for Satellite Formations." Proceedings of the 2000 IEEE Aerospace Conference, Big Sky, Montana, March 2000.

[7] Kitts, C., "A Small/Micro-/Pico- Satellite Program for Investigating Thunderstorm-Related Atmospheric Phenomena." Proceedings of the 12th Annual AIAA/USU Conference on Small Satellites, Logan, Utah, September 1998.

[8] Swartwout M. and C. Kitts, "Automated Health Operations for the Sapphire Spacecraft." Proceedings of the 33rd Annual International Telemetering Conference, Las Vegas, NV, October 1997.

[9] Swartwout, M., Kitts, C. and R. Batra, "Persistence-Based Production Rules for On-Board Satellite Automation." Proceedings of the 1999 IEEE Aerospace Conference, Snowmass, CO, March 1999.

[10] Hovanessian, S., Raghavan, S. and D. Taggart, LIFELINE: A Concept for Automated Satellite Supervision, Aerospace Report No. TOR-93(3516)-1, August 1993.

[11] Wyatt, E.J. and J. Carraway, "Beacon Monitoring Approach to Spacecraft Operations." Proceedings of Reducing the Cost of Spacecraft Ground Systems and Operations, Oxfordshire, United Kingdom, September 1995.

[12] Niederstrasser, C., "Development of a Satellite Beacon Receiving Station." Proceedings of the 12th Annual AIAA/USU Conference on Small Satellites, Logan, UT, September 1998.

[13] Kitts C. and M. Swartwout, "Beacon Monitoring: Reducing the Cost of Nominal Spacecraft Operations." In preparation for submission to the Journal of Reducing Space Mission Cost.

[14] Kitts C. and M. Swartwout, "Extending Beacon-Based Health Monitoring to Distributed Space Systems." Proceedings of the 2000 IEEE Aerospace Conference, Big Sky, Montana, March 2000.

[15] Palmintier, B., Kitts, C. and R. Twiggs, "Distributed Computing on Emerald: A Modular Approach for Robust Distributed Space Systems."

Proceedings of the 2000 IEEE Aerospace Conference, Big Sky, Montana, March 2000.

[16] Boden D.G. and W.J. Larson, Cost-Effective Space Mission Operations, McGraw-Hill Companies, Inc., San Francisco, 1996.

[17] Kitts C. and M. Swartwout, "Experimental Initiatives in Space System Operations." Proceedings of the Annual Satellite Command, Control, and Network Management Conference, Reston, VA, September 1997.

[18] Cutler J. and C. Kitts, "Mercury: A Groundstation Control Program for Space System Automation." Proceedings of the 1999 IEEE Aerospace Conference, Snowmass, CO, March 1999.

[19] Kitts, C., "Specifying Spacecraft Operations at the Product/Service Level." Proceedings of the 48th International Astronautical Federation Congress, Turin, Italy, October 1997.