Management Challenges of Launching Multiple Payloads For Multiple Customers

Dave Callen
Taurus Mission Manager
Taurus Program Office
Orbital Sciences Corporation
21700 Atlantic Blvd
Dulles, VA 20166

Tele: (703) 406-5225
Fax: (703) 406-3413
E-mail: callen.dave@orbital.com

©Copyright 1999 Orbital Sciences Corporation

Permission Granted to the AIAA/USU Conference on Small Satellites
for Reprint and Duplication

Abstract

Orbital has provided launch services for multiple satellites as a means to provide greater economy for access to space. These include satellites from NASA, DoD, commercial companies, universities, and foreign governments. While satellite customers view shared launches as a means to achieve reduced launch costs, this approach adds many complexities that a traditional launch service provider does not have to address for a dedicated launch.

This paper will discuss some of the challenges associated with managing the mission planning activity and successfully completing the process to deliver the satellites on-orbit. To illustrate these challenges, this paper addresses Orbital's Taurus launches involving multiple payloads from different customers. Each of these missions involves considerably different customer requirements as well as different launch vehicle configurations to accommodate the spacecraft.

Orbital's approach to mission planning is to provide each customer a full complement of launch integration services. In satisfying multiple customers' needs on a single launch, the management challenges are many and varied. Technical issues, schedule compatibility, and even political issues must be satisfactorily addressed to successfully complete the mission. This paper will describe the numerous challenges that Orbital's Taurus team has faced working with multiple users and how these issues have been and are being resolved.

Introduction

Orbital Sciences Corporation was founded in 1982 on the vision of "Bringing the Benefits of Space Down to Earth" by developing new applications in "Micro Space" technologies. Orbital's vision was realized through the implementation of a new paradigm by combining innovative commercial business practices with emerging cutting edge technologies. One new paradigm exploited by Orbital has been the continuous manifesting of multiple satellites on an individual launch. These launches use the company's two small launch vehicles, the Pegasus and Taurus. Orbital has aggressively pursued and performed shared launches as a way of reducing the cost of space flight and enabling an ever increasing number of smallsats to make their way to orbit. The benefits of this approach are worthwhile for the customer who is willing to coordinate his mission requirements with that of a co-passenger payload in exchange for sharing the total launch cost. Unlike the approach taken by other launch systems and launch team managers, Orbital's approach provides greater assurance to match customer requirements and schedules to accommodate the manifested payload customers. To date, ten Orbital vehicles have launched with multiple payloads from different customers. Three more are scheduled before the end of 2000. These include various combinations of customers from NASA, DoD, commercial companies, universities, and foreign governments. And while this approach does provide satellite customers a means to achieve reduced launch costs, it does add many complexities that a traditional dedicated launch service does not.

Pegasus Air-Launch Vehicle

During the nine years since it's first flight, the Pegasus launch system has undergone many improvements to increase it's performance, reliability, and ability to support a variety of multiple payload configurations. At the time of this writing, Pegasus has celebrated 27 launches as the workhorse to support a diverse group of customers. The current Pegasus XL vehicle is a fourth generation launch system incorporating many design improvements over the original Standard configuration. These improvements include larger solid rocket motors for increased payload performance to orbit, increased design margins to enhance reliability, and increased orbit injection accuracy through the incorporation of a state-of-the-art navigation system. The Pegasus XL vehicle is shown in **Figure 1** and is launched by Orbital's L-1011 Carrier Aircraft. The mobility of the Pegasus Air Launch System has been demonstrated by its ability to be launched from any operationally approved location. To date, Pegasus has been launched from Vandenberg AFB in California, Wallops Flight Facility in Virginia, the Eastern Range in Florida, and the Canary Islands, a province of Spain off the west coast of Africa. Launches from the Kwajalein Atoll are scheduled for later this year and early next year, further demonstrating the flexibility of the system.

The Pegasus configuration consists of a three stage, inertially guided, all solid propellant air launched vehicle. Additionally, an optional fourth liquid fueled stage may be used to increase performance, increase orbit injection accuracy, or maneuver the vehicle to provide different

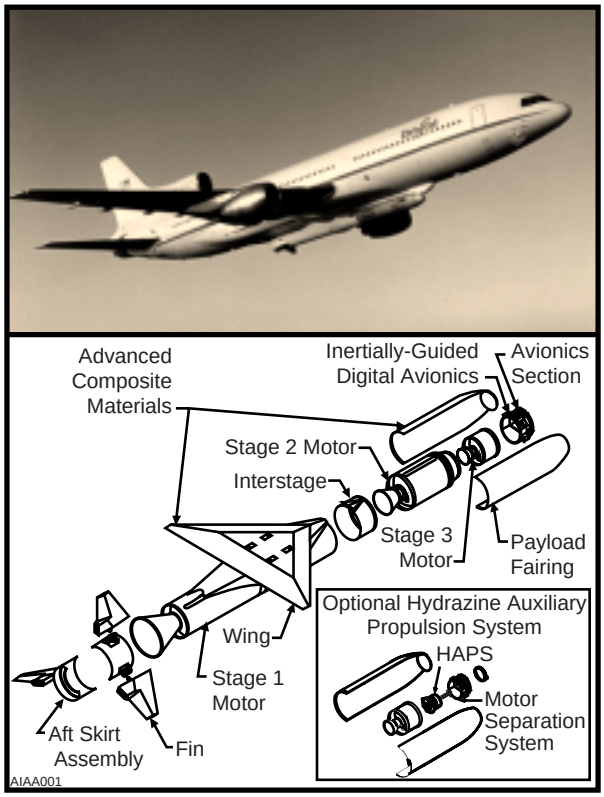

Figure 1. *Pegasus XL and L-1011 Carrier Aircraft.*

orbits for multiple payloads as demonstrated during the most recent Pegasus launch. The vehicle uses a 50 inch diameter fairing to protect the payloads during ascent.

Taurus Launch Vehicle

The Taurus launch system, **Figure 2**, was developed in support of the Defense Advanced Research Projects Administration's (DARPA) requirement for a rapid reaction launch system capable of operating in an austere, unimproved environment. Taurus satisfied the rapid reaction requirement to be erected and launched from an unimproved site within a 14 day period. A complete set of transportable launch support equipment, including payload equipment accommodations, and a launch control van enables the Taurus system to easily operate from a wide variety of launch facilities. Taurus launches to date have been conducted from Vandenberg AFB in California but the vehicle is also compatible for launches from the Eastern Range in Florida. Launches from Kwajalein, Alaska, and Wallops Flight Facility can also be accommodated to achieve specific orbits.

The Taurus launch vehicle is a second generation system featuring a number of improvements from the original vehicle. These improvements provide for a more robust and capable commercially available vehicle and the addition of more configurations to accommodate multiple payloads. The Taurus vehicle configuration shown in **Figure 3** is a four stage, inertially guided, all solid propellant ground launched vehicle. Taurus makes use of many of the components of the Pegasus vehicle including Stages 1, 2, and 3 and numerous electronic units, while adding other components such as Thiokol's Castor 120 motor and the higher capacity composite structure to meet the needs of the Taurus users' requirements. Taurus' 92 inch diameter payload fairing provides the largest payload envelope in its class while the 63 inch diameter fairing provides increased performance to orbit with a smaller payload envelope. To date, Taurus has successfully performed three launches placing seven payloads in their prescribed orbit. Three more launches are scheduled prior to September 2000. Four of these six launches include multiple customer manifests.

Multiple Payload Vehicle Configurations

The Pegasus and Taurus launch vehicles can be configured in a variety of ways to accommodate multiple payloads on a single launch. The two basic approaches for each vehicle is to either (1) stack the spacecraft within the payload volume such that the aft spacecraft is load bearing, or (2) provide an adapter structure that entirely supports the forward spacecraft, eliminating the aft spacecraft completely from the load path.

Method (1) is the approach most often used on Pegasus missions and provides the maximum useable fairing volume and performance to orbit for each spacecraft by eliminating the mass necessary for adapter structures. Taurus flew a stacked configuration of two DoD satellites on it's maiden flight in 1994. Design of the forward spacecraft is straightforward but must conform to the assigned payload envelope, mass, and environments, as well as the defined interface to the aft satellite. The available mass for the aft payload is determined by the launch vehicle's performance to the prescribed orbit less the forward payload and attach hardware. The load-bearing aft spacecraft interfaces directly with the launch vehicle and either the forward spacecraft or an adapter via pre-determined interfaces. Representative stacked configurations for the Pegasus are shown in **Figure 4**. The more common configuration mates the forward and aft satellites directly, however the recent TERRIERS/ MUBLCOM launch included an adapter between the aft MUBLCOM and forward TERRIERS satellites. In this case, MUBLCOM remains part of the load path with the forward satellite, however its mechanical interface was with an Orbital-provided adapter rather than the forward satellite. The same holds true for the forward satellite interface. The first Taurus (T1) stacked configuration is illustrated in **Figure 5** and shown in **Figure 6**. The launch

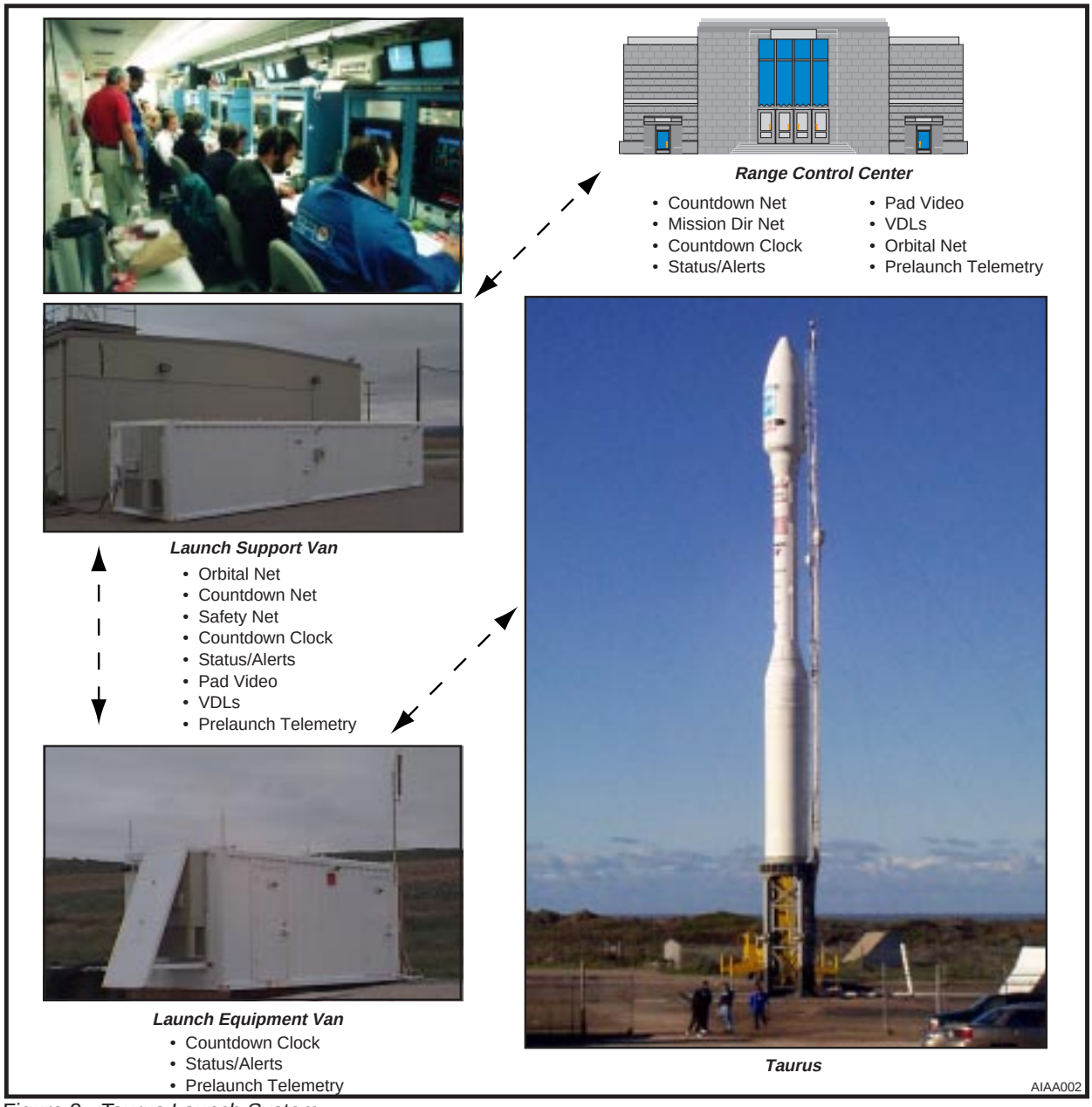

Figure 2. *Taurus Launch System.*

provider oversees the mission integration process and performs, mission integrated analyses such as coupled loads, thermal, EMI, vibroacoustic and others as necessary. Given an Orbital adapter is not used to stack the payloads, this approach requires interaction between the two payloads to coordinate mechanical and electrical interfaces - providing additional management challenges for the launch provider not required when there is no direct coordination required between the customers. It should also be noted this approach is not limited to just two satellites. It is possible to stack more than two satellites as demonstrated by the eight-stack of ORBCOMMs or the two-stack or ORBCOMMs combined with the Orbview-1 satellite launched on Pegasus. This approach may be inappropriate in some cases. For example, if one satellite is a foreign customer, technology transfer restrictions may make this approach impractical. Other examples include the case of a commercial satellite with extremely sensitive proprietary components or possibly a Defense Department satellite with classified or sensitive aspects co-sharing with a commercial or foreign satellite.

Method (2). For aft spacecraft that are not designed to withstand and transmit structural loads from the forward payload, a dual payload adapter is used. For Pegasus, and the 92-inch fairing Taurus configuration, this adapter

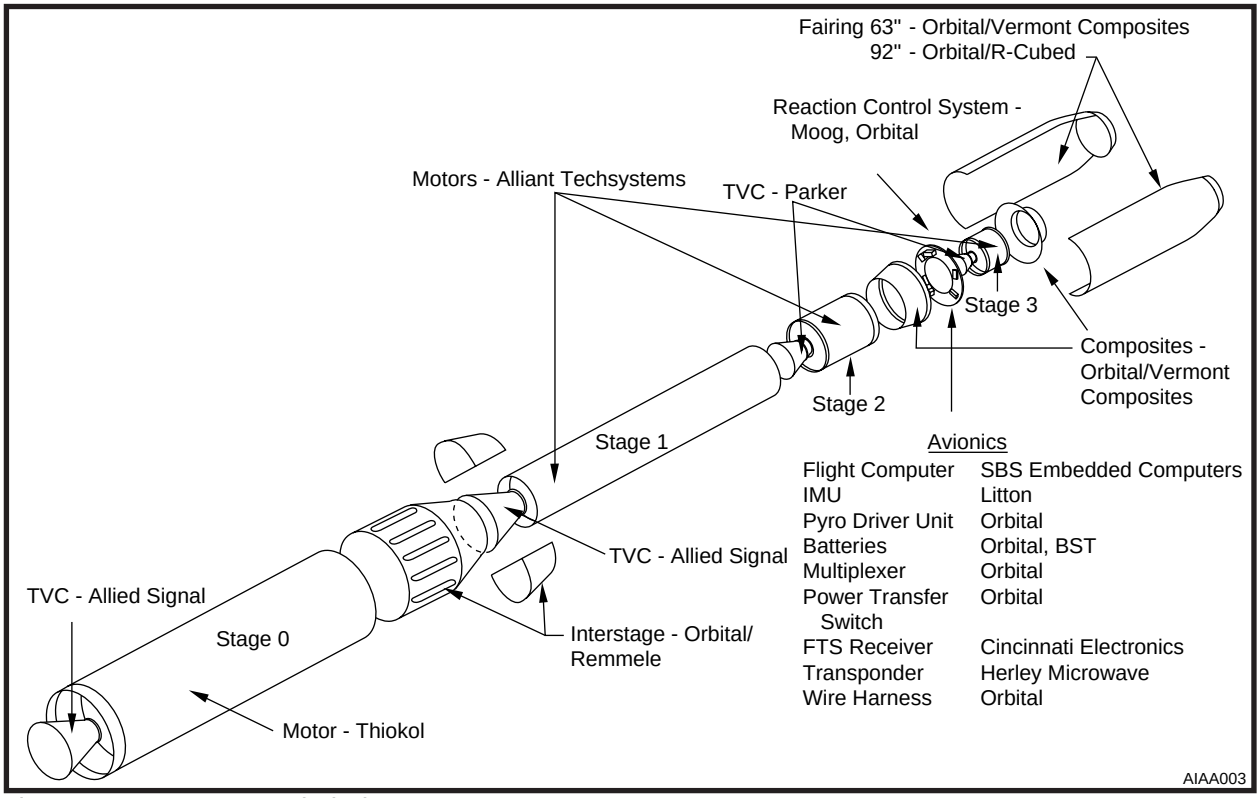

Figure 3. *Taurus Expanded View.*

is called the Dual Payload Attach Fitting (DPAF). The 63-inch Taurus configuration uses a structure called the Aft Payload Capsule (APC). These configurations are shown in **Figures 4** and **Figure 5**, respectively. In either case, the structure provides independent load paths for each satellite. The forward spacecraft loads are transmitted around the aft spacecraft via the adapter structure to the launch vehicle, thus avoiding any structural interface between the two payloads. Each satellite is also provided an independent electrical interface. This approach not only physically isolates the two payloads, but also aids in minimizing the need for direct coordination between customers. This results in fewer technical transfer or classification issues as demonstrated by Orbital's current effort to integrate the South Korean KOMPSAT and the NASA/JPL ACRIMSAT spacecraft on a single launch later this year. Integration efforts with each satellite are conducted independently. Launch site operations are performed independently and separately from each other. The ability to perform the mission in this manner prevents restrictions that could have easily prevented the mission from taking place if direct interaction was required

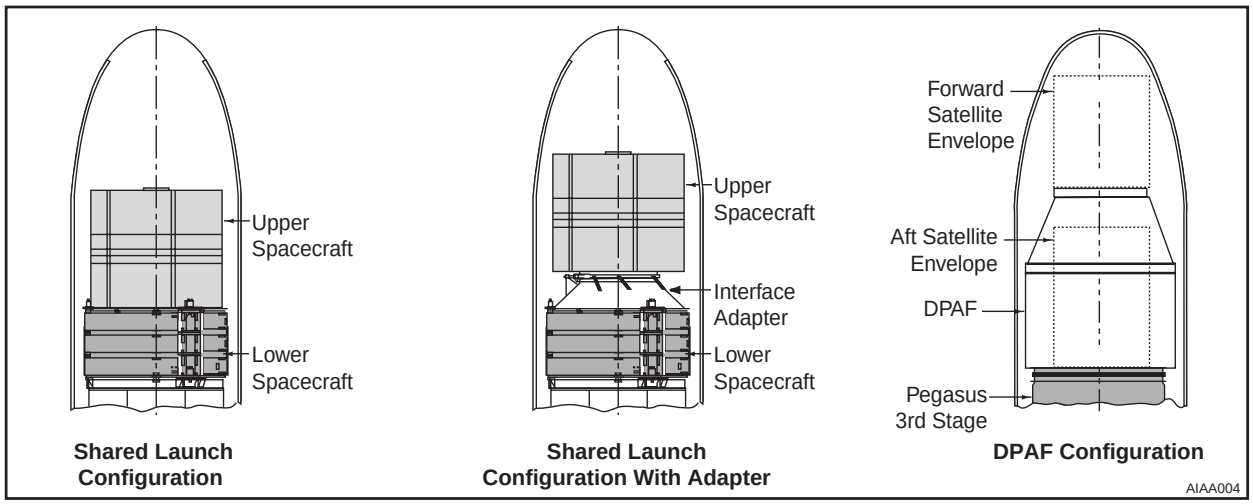

Figure 4. *Multiple Satellite Configurations.*

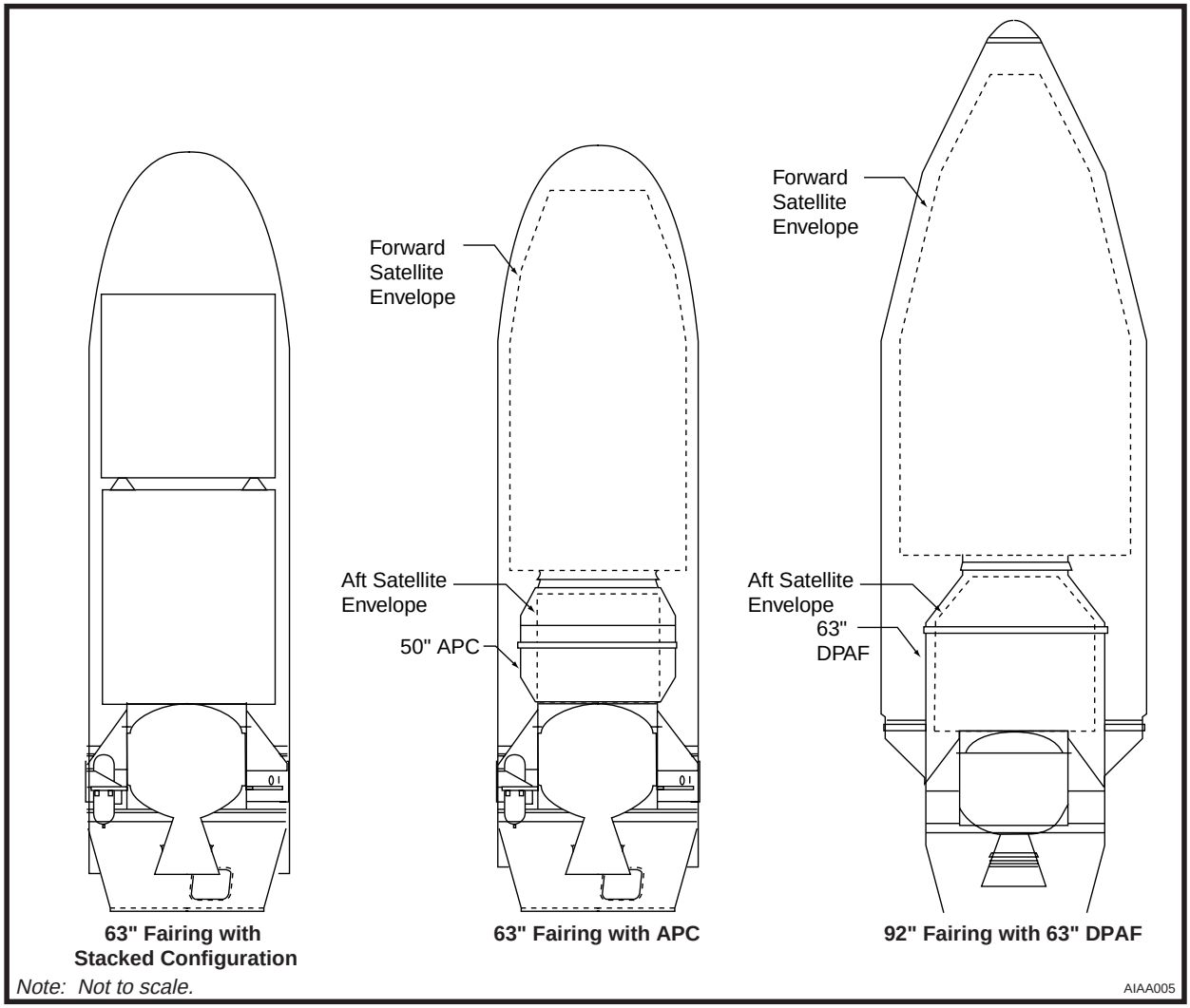

Figure 5. *Taurus Multiple Satellite Configuration.*

between the two satellite providers. For this configuration, the mass available to the aft satellite is the launch vehicle performance minus the forward satellite and the associated adapter structure and electrical harnessing.

In an ongoing effort to fully utilize available volume and performance, Orbital has also flown a combination of the two configurations. The Taurus T2 mission launched the GEOSat Follow On (GFO) spacecraft in the forward DPAF position, while a stack of two ORBCOMM spacecraft occupied the aft position enclosed by the DPAF structure as shown in **Figure 7**.

Experience

To date, Orbital has launched over 60 payloads on 30 Pegasus and Taurus launches including 22 satellites on multiple customer missions. **Figure 8** shows the Pegasus and Taurus operational heritage since the inaugural Pegasus flight in 1990. **Figure 9** details the results for missions with multiple customers. This figure highlights the experience Orbital has with manifesting a variety of customers on different missions. In addition to the missions shown, Taurus currently has two and Pegasus has one multi customer mission manifested in the next 18 months. This history makes Orbital the undisputed leader is launching multiple small satellites. It has been Orbital's innovative management approach that has made so many multiple-payload missions a reality. The results are a glowing success, not only from the perspective of final orbit results, but from customer satisfaction throughout the integration process. This success has not come without significant challenges and learning experiences. Each new customer or combination of customers represents a new set of requirements, challenges, and expectations. Addressing these items are the key to successfully providing satellite customers reduced launch costs via shared launches.

Figure 6. *T1 Stacked Satellite Configuration.*

Management Buy In

Foremost in overcoming the hurdles to shared launches, is senior management acknowledgement the approach is a worthwhile venture. It is easy to list the obstacles, challenges, and hurdles of multiple manifesting and come to the conclusion that it is just too difficult. Management commitment, from both the launch vehicle provider as well as the satellite customers, is paramount to ensuring a successful mission that meets the requirements of all parties. Orbital's vision of "Bringing the Benefits of Space Down to Earth" has required managers to leave no stone unturned in an effort to reduce the cost of delivering hardware to space. As a result, Orbital management has embraced the concept of aggressively seeking missions with multiple customers.

Is A Secondary Feasible?

Once a potential mission has been identified, the launch provider needs to assess the viability of adding additional satellites and possibly reducing the cost for the primary customer. For the most part this is a straightforward process that consists of evaluating the target orbit and the volume and performance available for potential secondaries. However, as mentioned before, other considerations should not be overlooked. Foremost is whether or not the primary customer is open to such an arrangement. For various reasons, even if excess capability exists, a customer may elect to forgo the possible cost savings associated with launching additional satellites. Other considerations include, but are not limited to potential political or cultural differences between customers, commercial proprietary information, national security issues, and spacecraft interface flexibility. Once these factors have been evaluated and the consensus is a secondary is at least feasible, the effort to secure a secondary begins in earnest.

The Primary Satellite Contract – Up Front Planning

The first step to overcoming many of the hurdles with shared rides is the contract with the primary satellite customer. A contract that lays the foundation for including a secondary satellite is critical to enabling the rideshare

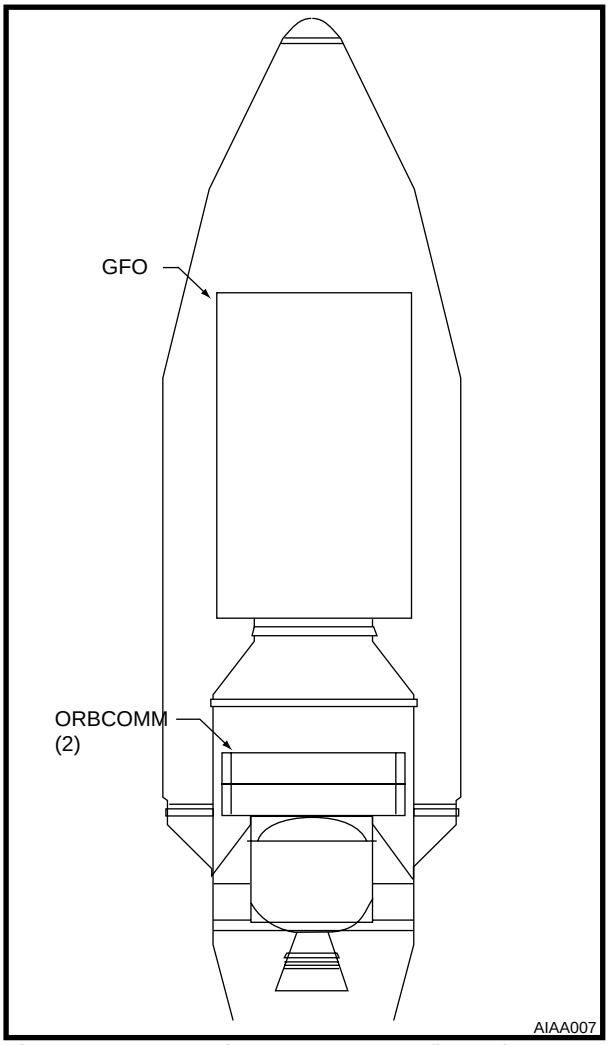

Figure 7. *T2 GFO/ORBCOMM Configuration.*

	Customer	Mission	1990-1991	1993	1994	1995	1996	1997	1998	1999
F1	DoD NASA	Pegsat Navysat	4/5/90 Std							
F2	DoD	7 Microsats	7/17/91 Std/HAPS							
F3	Brazil Orbital	SCD-1 OXP-1		2/9 Std						
F4	USAF/DoE Orbital	ALEXIS OXP-2		4/25 Std						
T1	DoD	STEP-M0 DARPASAT			3/13					
F5	USAF	STEP-M2			Std/HAPS 5/19					
F6	USAF	STEP-M1 FX-A			XL 6/27					
F7	USAF	APEX			Std 8/3					
F8	ORBCOMM ORBIMAGE	FM1 & FM2 OrbView-1				Std 4/3				
F9	USAF	STEP-M3				XL 6/22				
F10	USAF	REX-II					XL 3/8			
F11	BMDO	MSTI-3					Std 5/16			
F12	NASA	TOMS EP					XL 7/2			
F13	NASA	FAST					XL 8/21			
F14	NASA	SACB					XL 1/4			
F15	Spain	HETE MINISAT 01						XL 4/21		
F16	ORBIMAGE	Celestis OrbView-2						XL 8/1		
F17	USAF/DoE	FORTE						XL 8/29		
F18	USAF	STEP-M4						XL 10/22		
F19	ORBCOMM	ORBCOMM-1 FM5-12						XL/HAPS 12/23		
T2	BATC ORBCOMM	GFO FM3 & FM4							2/10	
F20	NASA Orbital	SNOE BATSAT (T-1)							XL 2/25	
F21	NASA	TRACE							XL 4/1	
F22	ORBCOMM	ORBCOMM-2 FM 13-20							8/2 XL	
F23	ORBCOMM	ORBCOMM-3 FM21-28							9/23 XL	
T3	DoD	STEX							10/3	
F24	Brazil	SCD-2							10/22 Std	
F25	NASA	SWAS							12/6 XL	
F26	NASA	WIRE							3/4/99 XL	
F27	NASA DoD	TERRIERS MUBLCOM							5/17/99 XL	

Figure 8. *Pegasus and Taurus Flight Heritage.*

AIAA009

Flt	Launch Date Vehicle	Customer(s)	Payload	Payload Mission	Target Orbit Actual Orbit	Mission Results
Pegasus						
XF1	4/5/90 Standard	DoD/NASA DoD	PegaSat SECS	• Flight Test Instrumentation • Atmospheric Research • Communications Experiment	320.0 x 360.0 nm @ 94.00° i 273.0 x 370.0 nm @ 94.15° i	• Complete Success • President's Medal of Technology Awarded to Orbital
F3	2/9/93 Standard	INPE Brazil Orbital	SCD-1 OXP-1	• Data Communications • Communications Experiment	405.0 x 405.0 nm @ 25.00° i 393.0 x 427.0 nm @ 24.97° i	• Complete Success
F4	4/25/93 Standard	DoD/DoE Orbital	ALEXIS OXP-2	• Technology Validation • Communications Experiment	400.0 x 400.0 nm @ 70.00° i 404.0 x 450.5 nm @ 69.92° i	• Complete Success
F8	4/3/95 Hybrid	ORBCOMM NASA	FM1 &FM2 MicroLab	• Communications • Atmospheric Research	398.0 x 404.0 nm @ 70.00° i 395.0 x 411.0 nm @ 70.03° i	• Complete Success
F14	11/4/96 XL	NASA	SAC-B HETE	• Space Physics Research • Space Physics Research	510.0 x 550.0 km @ 38.00° i 488.1 x 555.4 km @ 37.98° i	• Failed to Separate Spacecraft
F20	2/25/98 XL	NASA Teledesic	SNOE BATSAT(T-1)	• University Science Payload • Commercial Telecommunications Test Payload	580.0 x 580.0 km @ 97.75° i 582.0 x 542.0 km @ 97.76° i	• Complete Success
F24	10/22/98 HYBRID	INPE Brazil NASA	SCD-2 Wing Glove	• Data Communications • Atmospheric Experiment	750.0 x 750.0 km @ 25.00° i 750.4 x 767.0 km @ 24.91° i	• Complete Success
F27	5/17/99 XL w/HAPS	NASA DARPA	TERRIERS MUBLCOM	• University Science Payload • Technology Validation	550.0 x 550.0 km @ 97.75° i 551.0 x 557.0 km @ 97.72° i 775.0 x 775.0 km @ 97.75° i 774.0 x 788.0 km @ 97.72° i	• Complete Success • Complete Success
Taurus						
T1	3/13/94	DoD	DARPASat STEP 0	• Technology Validation	290.0 x 293.0 nm @ 105.00° i 290.8 x 301.2 nm @ 105.00° i	• Complete Success
T2	2/10/98	Ball Aerospace ORBCOMM	GFO 2 ORBCOMM Satellites	• U.S. Navy Payload • Commercial Telecommunications	778.7 x 790.1 km @ 108.04° i 781.3 x 876.9 km @ 107.99° i	• Complete Success

AIAA009

Figure 9. *Orbital's Flight Performance Summary.*

process to occur. Although occasionally two customers come together and jointly request a launch or two compatible customers have been identified by the launch provider, Orbital's norm has been that the secondary is not identified at the time the initial launch services contract is signed. The contract should be up front in identifying the likelihood of an additional customer. Recognizing this, the maximum allowable primary satellite mass and volume must be succinctly defined to ensure the proper capability is presented to potential secondary customers. As much detail as possible about the mission requirements and launch vehicle-to-satellite interface should be provided in the contract's Statement of Work or documentation such as the Payload Questionnaire that is typically requested by the launch provider early in the coordination between the two parties. Electrical interfaces, contamination requirements, potential hazards, and other parameters affecting the secondary are best defined early to prevent compatibility problems later in the program.

If possible, launch dates, launch windows, and orbit parameters should be identified as ranges, rather than absolute values. The more flexible the primary customer is, the more likely it is to find a paying customer to help reduce the cost of the launch. Such flexibility was crucial for the first Taurus launch of two DoD satellites. Originally, due to very stringent requirements, there were many days that no launch window existed that satisfied both customer's requirements. When one did exist, it was extremely short, limiting launch availability significantly. After working together, the team was able to evaluate the various requirements and come to a solution that was acceptable to all and allowed for a reasonable launch window. Although not always highly desirable by the primary customer at the beginning of negotiations, working toward this approach in an effort to bring launch costs down is often a factor by the time the final contract is signed. Orbital recognizes that for some missions the orbit parameters are fixed or are a very tight range and little can be done without severely affecting the satellite's

mission. In these cases, flexibility in other areas may be critical to attracting additional customers.

The contract should provide detailed provisions for cost sharing or savings that will be realized by the primary if and when a secondary is found. Schedule, possible schedule delays in an effort to support a secondary, and timing for identifying a secondary are typically addressed. If the launch provider is confident that a compatible secondary exists for the mission, the primary contract may already include a cost savings to the primary with provisions for launch date flexibility. The key is to remember that options exist for both parties and should be evaluated thoroughly to find what's best and provides a "win-win" situation.

Details of "payload compatibility analysis" contents and primary customer insight to the selection and approval process of the secondary, if applicable, should be specified to the degree practical. Addressing these issues up front prevents laborious and potentially contentious contract negotiations later in the mission.

It is imperative that the launch provider communicate to the primary customer that, once identified, the secondary customer will be required to provide all necessary documentation to ensure no impact to the primary mission. The launch provider should also delineate that the secondary will receive the full complement of launch integration services similar to that of the primary, enhancing the chance for a completely successful mission, smooth integration process, and two satisfied customers.

Finding the Secondary

Once a mission is identified, and assuming there is volume and performance capability to support a secondary, the difficult job of identifying potential secondary candidates begins. Getting the word out to the ever changing, ever expanding smallsat market is no easy task. Orbital uses a variety of methods to notify the community of pending launches with excess capability. Print advertisements hailing recent Pegasus or Taurus launch successes often address potential opportunities. Briefings at seminars, conferences, and other industry functions as well as briefings to existing and previous customers also communicate the opportunity. Orbital's web site has attracted numerous inquiries from customers. Again, an aggressive approach with full management backing is required to ensure full exposure to the potential market. Management, business development, and program personnel must all be looking for the satellite that is the "right fit". Providing as much detail as possible about the mission and capabilities available to the secondary are key to arousing interest in the satellite community. In some cases, marketing the secondary space is more difficult than others. Available mass and/or volume may be small. There may be little flexibility in orbit parameters. This is the case with the upcoming Taurus launch of the OrbView-4 satellite. The primary satellite's mission is such that a very specific orbit is required to fulfill the missions of its customers. Fortunately, the OrbView-4 is packaged in a manner so that significant volume and performance capability exists for the secondary. This allows a potential secondary the flexibility to include a propulsion system to adjust the orbit once deployed into the primary's orbit. Work is currently in place to add a secondary satellite that will do just that. Before settling on this payload, Orbital has worked with several other candidate satellites, providing one customer an innovative way to complete a long duration mission involving the spent Taurus upper stage. Treating all potential customers with respect and persevering to provide solutions that result in ways to get to orbit keeps the smallsat community interested in your activities. Once again, Orbital's aggressive, the glass is half-full mentality has provided a cost effective way for two satellites to reach orbit.

Define the Service and Manage Expectations

As mentioned earlier, laying the foundation with the primary customer early in the mission helps overcome many obstacles later in the flow. Likewise, providing a clear, concise definition of the service to be provided to the secondary is crucial. Define the available mass and volume as well as the detailed mechanical and electrical interface as early as possible, preferably before signing the contract with the secondary. This sounds intuitive, but is sometimes easier said than done as primary payload requirements may be late in coming. In these cases, defining worse case scenarios that the secondary may have to accommodate is the prudent approach. Otherwise, it's very possible to end up with overlapping requirements that cannot be met.

Orbital's approach is to provide each customer on a specific mission a full complement of launch integration services including documentation, analyses, range coordination, integration meetings, and launch site integration. These services, including a timeline for all documentation submittals and key milestones, are presented to the secondary early in the process and are documented appropriately in the contract, SOW, and Interface Control Document (ICD). At the same time, it is important to manage expectations such that the secondary is not disillusioned as the program progresses. A good example is the Taurus T4 commercial South Korean KOMPSAT mission. Commercial contracts by

nature limit customer insight to details of the launch vehicle production process, but in this case it is even more limited due to U.S. State Department restrictions in the Technical Assistance Agreement (TAA) approved for this launch. The Orbital T4 team has been established to operate within those parameters. Approximately a year before launch, NASA elected to co-manifest the ACRIMSAT spacecraft as a secondary on this mission. Although many NASA satellites have been launched on Pegasus, this is the first NASA satellite to be launched on Taurus. It is also the first time NASA has been a secondary on an Orbital launch. Traditional government launch contracts require significantly more customer insight to launch vehicle data than the commercial contract with a foreign primary satellite allows. Orbital worked closely with NASA from the beginning to manage expectations and to work to an agreeable arrangement that satisfied both parties. NASA is provided more insight than a traditional commercial secondary customer would be afforded, but less than what would typically be required of a dedicated NASA launch. This has been a learning process for both sides. To date the relationship has worked well due to the groundwork laid early in the program.

The Integration Effort

The launch vehicle provider must be prepared to provide the resources to support additional satellite customers. While a number of mission analyses are common for the entire configuration, there is additional effort to incorporate multiple payload inputs. Examples include the coupled loads, integrated thermal, random vibration, vibroacoustic, and the mission analyses. Inputs are required from both customers to complete these integrated analyses and in some cases require labor intensive effort to manipulate the input into usable data. A good example is converting the payload's structural model into a form that can be used in the launch provider's coupled loads analysis. The Final Mission Analysis becomes more complicated when evaluating the deployment sequence of multiple spacecraft and adapter structures. The integrated safety package required for range approval requires additional work to incorporate hazards from all the spacecraft.

Other analyses require separate efforts for each payload. These include separation tip-off, satellite to LV clearance, and others specified by the contract. The payload compatibility analysis – required by most primary, and some secondary, customers - requires substantial effort to collect the required inputs, complete the analysis, and present the results.
Orbital is committed to providing a complete integration service including Mission Integration Working Groups, Interface Control Document and Drawings, and Integrated Launch Site Procedures. These are all "standalone" efforts for each customer and require substantial manpower to complete in a timely manner. Additional engineers, designers, and manufacturing personnel may be required to accommodate multiple satellite interfaces and associated hardware. Range documentation and launch day documents (countdown procedure, mission constraints document, communication plans, and others), FAA licenses, payload processing facility (PPF) contracts, and insurance policies must all be updated to reflect the final flight configuration including all satellites.

Orbital has implemented planning that attempts to minimize these impacts by timely deliveries of inputs from the customers and staggered timelines for delivering results to each customer. These timelines are worked closely with each customer early in the integration process to ensure they are acceptable to all parties. By holding the customer responsible for meeting his delivery dates and meeting our promise dates, Orbital is able to provide a service that meets the needs of the payload customers as well as the range and other external parties. By providing standard interfaces for its customers, Orbital can minimize the effort required to engineer, design, and produce mission specific hardware.

Schedules for deliverables from each customer must be clearly defined and adhered to in order for the launch provider to produce documentation and complete integrated analyses on time. Failure to comply in this area can adversely affect the likelihood of an on-time launch. For example, late delivery of a validated spacecraft structural model delays completion of the final coupled loads analysis. These results are often used to establish test levels for final spacecraft structural testing. The launch provider must ensure each customer is prepared to deliver an acceptable model in time to support this analysis. Likewise, late customer inputs to range required documentation can result in late flight plan approval from range safety. Again, the launch provider must coordinate this effort to preclude conflicts with meeting range schedules.

Launch Site Integration

Launch site activities present their own separate set of challenges. Issues as varied as launch control room-seating accommodations, payload processing facility space limitations, processing timelines, integrated electrical testing, and hazardous procedures require close coordination on part of the launch provider. Launch site procedures, operations, and timelines for each customer must be planned to the smallest detail. Meeting spacecraft

requirements such as propellant loading, contamination control, air conditioning, battery maintenance, and physical access take on increased complexity when integrating more than one satellite. Careful planning to minimize the integration timeline and possibility of exceeding component "clocks" started by key satellite operations such as arming plug installation is essential to reducing the costs incurred by launch teams deployed to the field. Customer operations at both the integration facility and launch pad require detailed oversight on the part of the launch provider. Productive, thorough working group meetings prior to arrival at the launch base are a mandatory prerequisite. These meetings are to be chaired by key technical and operations personnel responsible for the integration of the satellites to the launch vehicle.

Day-of-launch activities represent their own challenges. Customer communication requirements, mission constraints, reporting paths, and countdown participation must be succinctly defined to minimize the possibility of launch day confusion. Roles and responsibilities are to be clearly laid out in launch documentation.

External Customers

It's important that external customers also be informed early of the decision to manifest additional satellites on a given launch. These customers include, but are not limited to, all appropriate range organizations, the Payload Processing Facility management, the FAA, and insurance companies. Early coordination prevents confusion and possible last minute heroics to satisfy requirements levied by these organizations. This is especially true if one of the customers is a non-US entity, whereas additional coordination is needed with the appropriate government agencies to secure permission to launch the satellite. Additional restrictions on data delivered to the customer are likely to be implemented for such launches. Range safety organizations must be fully cognizant of the design details and planned operations for all satellites, as well as the launch vehicle, before approval will be given to proceed with the integration and launch activities. All satellite hazards and potential security issues must be fully understood by the PPF provider to ensure his facility meets the needs of the mission. For commercial missions, the FAA and insurance companies require very specific information on the nature of the entire mission, including data on all payloads. Notifying these agencies as soon as possible minimizes the chances for last minute requests for additional data. If a commercial spaceport is being used, they should also be notified if additional satellites are added to the mission. When downrange or mobile assets are used to track the launch, they too should be informed of any additions to the mission. This is not an exhaustive list of possible organizations that need to be kept abreast of the manifest, but represents typical agencies the launch provider must coordinate with prior to launch. Each launch has will have its own set of potential agencies to which the launch provider must be responsive. It is important to keep them all cognizant of your plans.

Conclusion

Orbital is the leader in multiple satellite launches. We have demonstrated that this is a responsive, cost effective way to provide access to space to the smallsat community. The management challenges to accomplishing this task are many, ranging from finding compatible satellites to conflicting requirements on launch day. There is no standard set of answers for all missions. Each mission and set of customers brings new challenges. Orbital's experience is if you work hard enough, there will be new answers.

This effort cannot be accomplished by the launch provider alone. The satellite providers are an equal partner in realizing the benefits of this approach. Yes, shared rides do provide a lower cost to orbit, but only if satellites commit to a specific launch vehicle in a timely fashion, are willing to be flexible in *some*, not all, of their requirements, and are considerate of their co-passengers. Orbital and its customers have continuously found ways to make this happen and plan to continue to do so for many years to come.