IMAGE, the First of the NEW MIDEX Missions

W. C. Gibson
Executive Director, Southwest Research Institute
6220 Culebra Road, San Antonio, TX
210-522-2700
Bgibson@swri.edu

Dr. J. L. Burch
Vice President, Southwest Research Institute
6220 Culebra Road, San Antonio, TX
210-522-2363
Jburch@swri.edu

J. R. Scherrer
Program Manager, Southwest Research Institute
6220 Culebra Road, San Antonio, TX
210-522-3363
Jscherrer@swri.edu

Dr. M. B. Tapley
Senior Engineer, Southwest Research Institute
6220 Culebra Road, San Antonio, TX
210-522-6025
Mtapley@swri.edu

F. A. Volpe
IMAGE Mission Manager, NASA/GSFC
Greenbelt, MD 20771
301-286-7791
fvolpe@pop400.gsfc.nasa.gov

W. D. Davis
Explorers Instrument Systems, NASA/GSFC
Greenbelt, MD 20771
301-286-303
bdavis@pop400.gsfc.nasa.gov

Abstract

The Imager for Magnetopause-to-Aurora Global Exploration (IMAGE) mission will be the first of the new Medium-class Explorer (MIDEX) missions to fly. Led by Southwest Research Institute with oversight from the Explorers Project Office at NASA GSFC, IMAGE is the first satellite mission dedicated to imaging the Earth's magnetosphere. IMAGE will utilize a combination of ultraviolet and neutral atom imaging instruments plus an RF sounder to map and image the temporal and spatial features of the magnetosphere. The eight science sensors are mounted to a single deckplate. The deckplate is enveloped in an eight-sided spacecraft bus, 225 cm across the flats, developed by Lockheed Martin Missiles and Space Corporation. Constructed of laminated aluminum honeycomb panels, covered extensively by Gallium Arsenide solar cells, the spacecraft structure is designed to withstand the launch loads of a Delta 7326-9.5 ELV. Attitude control is via a single magnetic torque rod and passive nutation damper with aspect information provided by a star camera, sun sensor, and three-axis magnetometer. A single S-band transponder provides telemetry and command functionality. Interfaces between the self-contained payload and the spacecraft are limited to MIL-STD-1553 and power. This paper describes the IMAGE mission as well as the engineering details of the spacecraft.

1. Introduction

1.1 Scope and Objectives of the IMAGE Investigation

IMAGE will provide the first opportunity to image magnetosphere regions on a global scale. The investigation will use neutral atom, ultraviolet, and radio imaging techniques to: identify the method of entry of solar wind plasma into the magnetosphere; determine the extent and location of ionosphere plasma sources; discover how and where energetic plasmas are accelerated, transported and lost during sub-storms and magnetic storms; and measure Coronal Mass Ejection (CME)-related neutral atom fluxes and radio emissions as forecasting tools for geomagnetic storms. The data collected will be distributed to interested scientific centers of learning for analysis and advancement of knowledge of physical phenomena in the magnetosphere.

1.2 Mission Description

The IMAGE Observatory will be launched into a highly elliptical (1000 km x $7R_E$ altitude), 90° inclination orbit on 15 February 2000 from the NASA Western Range by a three-stage Delta II 7326-9.5 ELV. The spin-stabilized Observatory will be oriented so that the IMAGE viewing instruments scan the earth each Observatory revolution (spin axis normal to the orbit plane). The Radio Plasma Imager (RPI) will then begin deployment (under control of the Central Instrument Data Processor [CIDP]) of the four radial wire antennas. When fully deployed, the opposing antennas will measure approximately 500 meters tip-to-tip. The spacecraft will provide spin authority to maintain the Observatory spin rate during antenna deployment at no less than 0.5 rpm and no greater than 20 rpm. After completion of radial antenna deployment, the RPI axial antennas will be deployed. The axial antennas measure up to 20 meters tip-to-tip when fully deployed. When antenna deployment is complete, operational science investigations will begin. The science instrument's data will be collected once each Observatory spin (2 minutes) by the CIDP, transferred to and stored in the Spacecraft Control Unit (SCU) Mass Memory Module (MMM), and eventually transmitted by the spacecraft's S-band transponder to the Deep Space Network (DSN) ground data network once each 13.5 hour orbital period and to NOAA and USAF stations at a low rate (44 kbps) whenever the Observatory is above 2 R_e. Science operational commands will be transmitted to the Observatory once per week from the Science and Missions Operations Center (SMOC) located at the Goddard Space Flight Center. IMAGE is designed to operate for two years.

1.3 The IMAGE Observatory

The IMAGE Observatory consists of two primary elements, the spacecraft and the payload. The spacecraft was developed for SwRI under subcontract to Lockheed Martin Missiles and Space (LMMS) Corporation in Sunnyvale, California. The spacecraft features an eight-sided structure with body mounted dual junction Gallium Arsenide solar cells mounted on all sides plus the top and bottom. The solar array is capable of producing up to 380 watts (seasonal maximum) depending on solar beta angle (+/- 67° max range). The spacecraft structure is 225 cm across the flats of the octagon and 143 cm in height. A single string RAD-6000 based processor developed by SwRI for LMMS controls operation of the spacecraft. Power from the arrays is controlled by a Litton Amecom developed Power Distribution Unit (PDU) with a single 21 AH NiCd battery used for energy storage. Attitude control authority is via a single 790 AM^2 magnetic torque rod operated only during the lower altitude portions of the 13.5-hour orbit. Spacecraft aspect is determined by an array of sensors consisting of an LMMS developed Autonomous Star Tracker (AST), a Macintyre Electronic Design Associates, Inc. (MEDA) three-axis magnetometer, and an enhanced sun sensor developed for LMMS by Adcole Corp. Nutation is controlled with a 1.3 cm diameter steel tube, 61 cm in diameter, half filled with mercury. Mass of the assembled Observatory is approximately 460 kg including balancing weights.

The payload was developed by a number of different institutions as can be seen in Table 1 and integrated onto a single deckplate by SwRI. The deckplate was produced by LMMS and provided to SwRI as a part of the spacecraft procurement. The payload consists of multiple elements: 1) eight science sensors, 2) central instrument GN2 purge, 3) 14 heater control units (HCU), 4) cable harness assembly, 5) the Central instrument Data Processor (CIDP), and 6) a single deckplate onto which all payload elements are mounted. Embedded within the laminated honeycomb deckplate structure are ammonia bearing heat pipes designed to move heat from the instruments to 14 spacecraft mounted radiator panels. Mass of the assembled payload is approximately 210 kg. When operating in normal science mode the payload consumes approximately 130 watts for instrument and CIDP operations. Thermal control is expected to consume another 20 watts for the payload.

Table 1 Instrument Payload Developer			
Element	Major Component	Institution	Team Lead
Far Ultraviolet Imager (FUV SI)	Spectrographic Imager	UC Berkeley, CSL Liege	Dr. Steven Mende
Far Ultraviolet Imager (FUV WIC)	Wideband Imaging Camera	UC Berkeley, MSFC	Dr. Steven Mende
Extreme Ultraviolet Imager (EUV)		University of Arizona	Dr. Bill Sandel
High Energy Neutral Atom Imager (HENA)		Applied Physic Laboratory	Dr. Donald Mitchell
Medium Energy Neutral Atom Imager (MENA)		Southwest Research Institute	Dr. Craig Pollock
Low Energy Neutral Atom Imager (LENA)		Goddard Space Flight Center	Dr. Tom Moore
Radio Plasma Image (RPI)	Antenna Deployers	Able Engineering Corp.	Dr. Gary Heinemann(1)
Radio Plasma Imager (RPI)	Antenna Couplers	University of Paris, Meudon Observatory	Dr. Robert Manning (2)
Radio Plasma Imager	Electronics	University of Mass. Lowell	Dr. Bodo Reinisch (3)
Central Instrument Data Processor(CIDP)		Southwest Research institute	Mr. Michael Epperly
CIDP Flight Software		Southwest Research Institute	Mr. Ronnie Killough
Heater Control Units(HCU)		Southwest Research Institute	Mr. Michael Epperly
Payload Wiring Harness		Southwest Research Institute	Mr. Poul Jensen (4)
Payload Purge System		Southwest Research Institute	Mr. William Perry
(1) (2) (3) (4)	RPI team key supplier RPI Co-Investigator RPI Principal Investigator Currently Danish Space research Institute		

Assembled together the spacecraft and the payload are referred to as the Observatory. Figure 1 is a photograph of the Observatory and Figure 2 shows the IMAGE scientific payload assembled onto the payload deckplate.

Figure 1 Photograph of the assembled IMAGE Observatory in preparation for vibration tests. (Photo courtesy of Lockheed Martin Missiles & Space Company).

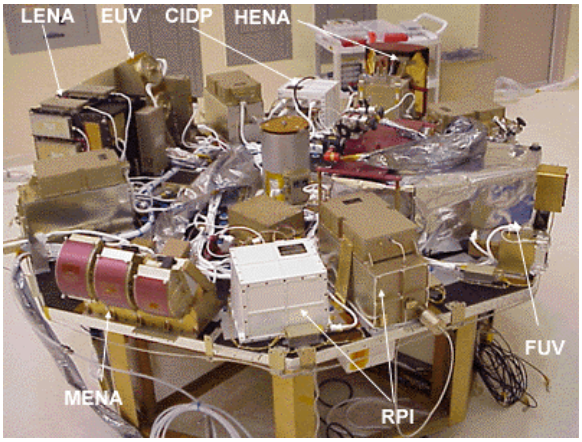

Figure 2 Photograph of the IMAGE payload deckplate showing all of the scientific instruments and support electronics mounted to the common deckplate.

Interfaces between the payload and the spacecraft have been kept to a minimum. Command and telemetry are passed between the two over a redundant MIL-STD-1553 bus. Power is provided to the payload over 6 pairs of lines driven by 15A solid state power converters located within the Power Distribution Unit (PDU). Mechanically the payload deckplate is attached to the spacecraft structure as a single unit. Thermal interfaces between the payload and structure are via the

radiator panel mentioned earlier. Software interfaces have also been kept as simple as possible.

2. Observatory Implementation

2.1 Structural Design Implementation

The spacecraft structure provides the strength and rigidity to maintain structural integrity under launch loads, has thermal properties that assist in removal of heat from the Observatory, provides the attachment points for the other subsystems and payload components, and is the structural interface with the launch vehicle. The structure's design was driven by the following considerations:

- Provide sufficient substrate area for the solar arrays
- Keep weight within Delta II 7326-9.5 launch capability for the IMAGE mission.
- Accommodate the science instruments field of view, alignment, thermal and power requirements
- Provide adequate clearance for science instruments and deployable wire antennas
- Minimize science instrument contamination
- Access to science instruments and spacecraft components
- Support EMI faraday cage requirements

The structure provides the following functional characteristics:

- Primary structural frequencies of 30 Hz lateral, and 53 Hz axial.
- Service Access: The structure provides access (via removable side panels) to all the Science Instruments and the spacecraft equipment with their associated wire harnesses during all phases of the integration, test and launch processing.
- Other access. The structure provides immediate access for control of the science instruments purge port and high voltage enable plug, air conditioning interface, battery test connector during integration, and launch processing.
- Alignment: The structure provides for installation alignment of the Science Instruments and spacecraft equipment when fully assembled, as well as measurements for alignment knowledge. The installation alignment accuracy provided is on the order of +/- 0.02 deg.

2.1.1 Major Structural Design Features

Figure 3 is an exploded illustration of the as-built IMAGE structure. Major structural features include eight, 1.3 cm thick, 143 x 91 cm, laminated honeycomb aluminum side panels with 10 mil face sheets secured to top and bottom closeout panels, the payload deckplate, four shear panels, and four reinforcing struts. The top panel is octagonal in shape, 216 cm across the flats, 1.9 cm thick with 10 mil aluminum face sheets. The bottom panel is the same size and construction. The skeleton of the structure consists of a central tube structure (+Z and –Z cylinders) formed from rolled aluminum 1.2 mm thick, to complete the cylindrical tube structure. A centrally located deckplate is used to provide a mounting location for the eight science instrument sensors and support equipment. The deckplate is connected to the +Z cylinder with an 95 cm diameter aluminum ring bracket as well as four 3.8 cm thick laminate aluminum honeycomb shear panels constructed with 10-mil aluminum face sheets that provide additional support to the structure for thrust loads. Four additional struts were added late in the Observatory's development to raise the first axial frequency to above 50 Hz and to help assure positive structural margins under launch loads.

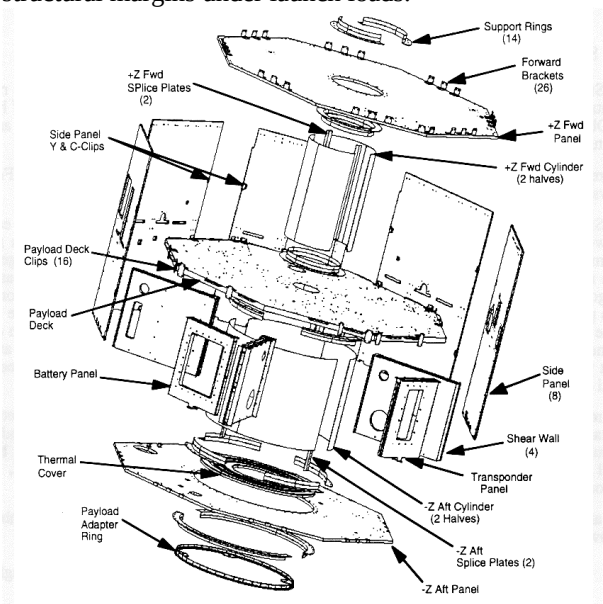

Figure 3 Exploded view of the IMAGE spacecraft structure.

2.1.2 Deckplate Assembly

As mentioned above all of the IMAGE science instruments are mounted to a common laminated aluminum honeycomb deckplate. The deckplate is octagonal in shape, approximately 216 cm across the flats, and 3.8 cm thick. Embedded within the deckplate

are 16 heat pipes used to conduct heat from the science instruments to dedicated radiators located on the side panels near mid-height of the Observatory. A total of 14 such radiators are used to provide a deckplate operating temperature of –20 to +40 deg. C worse case interface temperature for the instruments. As described below, 14 heater zones are used to maintain the instruments above their lower survival temperature limit of –30C.

2.1.3 Side Panels

The eight 143 x 91 cm side panels are constructed from 10 mil aluminum face sheets, and 1.3 cm thick, aluminum honeycomb. Covering the side panels are high efficiency dual junction Gallium Arsenide solar cells. The side panels are attached to the +Z and –Z closeout panels with aluminum Y and C clips.

2.1.4 Center Tubes

The center tubes of the Observatory are constructed from 2 mm aluminum rolled to form an upper cylinder (+Z) approximately 42.7 cm in diameter and a –Z cylinder 1.2 mm thick with a diameter of 94.5. The rolled upper and lower cylinders are joined with splice plates to for a rigid cylindrical assembly. The + Z cylinder is attached to the deckplate with a sectioned support ring assembly. Attachment of the + Z cylinder to the +Z closeout panel is via a similar support ring assembly. Connection of the –Z cylinder to the four shear panels described earlier is via a framed flange assembly.

2.2 Power Generation and Control System Implementation

The Electrical Power Subsystem (EPS) generates, stores, and distributes power for the IMAGE Observatory. The EPS is a direct energy transfer subsystem, that uses shunt regulation to direct solar array energy away from the power bus when the loads or battery charging do not require all the solar array power. The power bus is unregulated with a bus voltage that varies with the battery voltage. The EPS consists of solar arrays, a battery, a Power Distribution Unit, and bus harness. A block diagram of the Observatory power system is shown in Figure 4. The relationship between power generation and usage is shown in Figure 5 over the life of the mission. The Beta Angle in the figure is the angle between the sun and the normal to the spin axis.

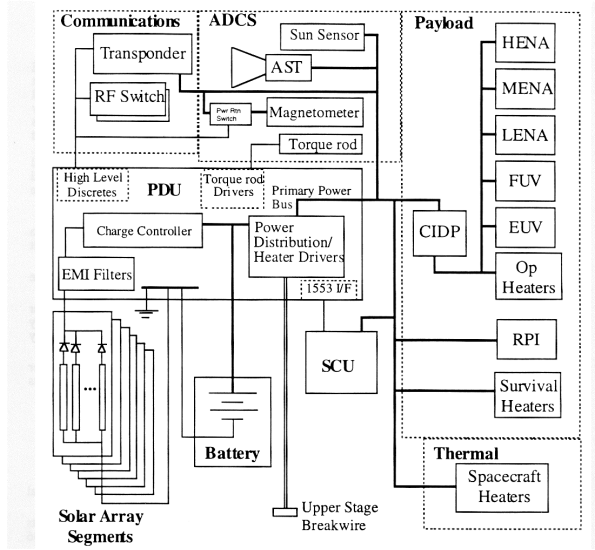

Figure 4 Block diagram of the IMAGE electrical power system.

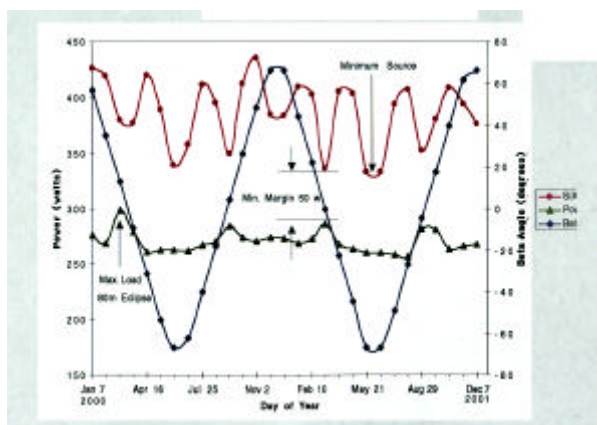

Figure 5 Plot of power generated vs. power consumed as a function of solar beta angle for the two years of expected on-orbit operation.

2.2.1 Power Distribution Unit (PDU) Charge Control

Battery charge control and Observatory power distribution is the responsibility of the PDU. Developed under subcontract to LMMS by Litton Amecom, the PDU is a single integrated assembly. As can be seen in Figure 4, the PDU provides the connection between the six solar cells strings, the single 21 Ah Super NiCd battery used for energy storage, and the switched power loads for the entire Observatory. The PDU uses the NASA GSFC developed Essential Services Node (ESN) processor to control the charging of the battery (based on battery temperature and bus voltage). The PDU autonomously selects the number of solar array strings needed to support the electrical load on the power system and provide battery charging

current at any time. The PDU also provides the power connection from the launch vehicle umbilical cable and the Observatory.

2.2.2 Solar Cell Selection and Laydown

Power for the IMAGE Observatory is generated by dual junction Gallium Arsenide (GaInP2/GaAs/Ge Dual Junction) solar cells mounted on all sides of the vehicle. The solar cells range in efficiency from 20 to 21.5%. The cells are arranged into 6 strings for redundancy and efficiency of operation of the spinning Observatory. Cells cover most of the area of all eight side panels as well as the + and – Z closeout panels. There is no attitude of the Observatory that does not have solar cells exposed, lessening the chances of low power because of a high tip off rate from the launch vehicle.

2.2.3 Battery

A 21 AH super NiCd battery provides energy storage which is used during eclipse operations, to power IMAGE. The battery consists of 22 Eagle Pitcher Industries (EPI) cells connected in series. The cells are assembled into a common housing. The NiCd battery was provided to IMAGE by NASA's Goddard Spaceflight Center. IMAGE is able to use a single battery owing to the very long orbital period and the infrequent eclipse periods and the correspondingly low duty cycles on the battery. On those occasions when the Observatory does have to operate in eclipse the battery will experience a worst case depth of discharge of 56%. The IMAGE battery has its own dedicated COSR covered radiator panel designed to maintain an operating temperature for the battery between 0 and 25 deg.C. Mass of the IMAGE battery is approximately 21 kg.

2.3 Telemetry and Command implementation

The RF Communications Subsystem provides the communications links to be used in uploading commands and data to the Observatory, and downloading housekeeping telemetry, health and safety telemetry, and science data gathered by the science instruments.

The RF Communications Subsystem supports uplink data rate communications of 2 Kbps for commanding and data uploads. Over more than 90% of the time the IMAGE Observatory is visible to Deep Space Network (DSN) ground stations for commanding.

RF communications Subsystem supports two distinct nominal downlink modes. The first provides a 2.28 Mbps data stream that allows 24 hours of stored science data (approximately 2 orbits of data) to be transmitted to the ground in a single one hour DSN contact. The second downlink rate broadcasts 44 Kbps of real-time data, primarily for use by USAF space weather scientists.

The RF Communications Subsystem consists of the S-Band transponder, a diplexer, helix antenna, two S-band Omni-directional antenna units, two latching RF switches and a RF power combiner/splitter. Figure 6 shows the system configuration.

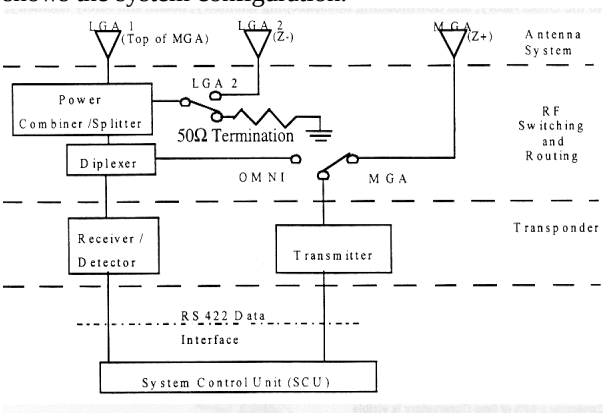

Figure 6 RF subsystem interconnection diagram.

2.3.1 Transponder

For telemetry, command, and ranging operations IMAGE uses a single L-3 Communications, Conic Division S-band transponder. As shown in the Observatory's electrical block diagram of Figure 7, the transponder is controlled by the Command Telemetry Module (CTM) installed in the SCU. Because IMAGE uses the Deep Space Network (DSN) for telemetry and command support, the transponder must be compatible with DSN RF requirements.

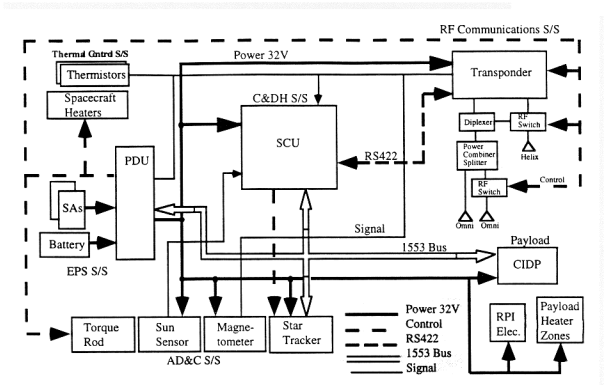

Figure 7 IMAGE Observatory simplified electrical block diagram.

The Conic transponder operates at two different downlink rates, 44k bps for the real-time downlink (for altitudes above 2Re) and 2.28 Mbps for playback of the mass memory module during DSN contacts (once each 13.5 hours). The downlink frequency assigned to IMAGE is 2272.5 MHz. In addition to the downlink the Conic transponder also provides support for a 2k bps command uplink at a carrier frequency of 2092.59 MHz. The transponder uses Binary Phase Shift Keyed (BPSK) modulation of a subcarrier followed by linear phase modulation of the downlink carrier for low rate (44 kbps) downlink. For high-speed downlink direct phase modulation of the carrier is used. This gives a better data to carrier/subcarrier ratio and improves receiver ability to lock and receive data.

Ranging capability of the transponder is compatible with Doppler tracking and DSS Sequential Ranging Assembly. Ranging can be performed simultaneously while commanding on the uplink and playing back stored data at high speed (2.28 Mbps) or transmitting engineering data at low speed (44 kbps) on the downlink. Power output of the transponder is 5 watts.

2.3.2 RF Antennas

IMAGE uses two types of RF antenna, a low gain omni and a medium gain helical cross-fire antenna. Figure 6 shows the interconnection of the RF system. The lower gain omni antennas are used before the Observatory is placed in its final orbital orientation to insure that RF contact is maintained through the widest range of attitudes. The two omni antennas combined yield nearly 4Pi steradian coverage for commanding. Since perfect 4Pi steradian coverage is not possible with dual omnis due to interferometer effects between them, only one low gain antenna is used during operations where the +Z hemisphere is visible to the ground stations. As soon as the Observatory is oriented with its spin axis normal to the orbit plane a command will bring the Medium Gain Antenna (MGA)on line. The MGA provides full visibility for altitudes > 12, 500 km where the Earth field of view < 40.2 degrees from the Observatory. The helical medium gain antenna has a 14.5 degree half angle beamwidth radiation pattern. The +Z omni antenna is mounted to the top of the MGA. Using the MGA at apogee and transmitting at 2.28 Mbps at 5 watts radiated power; IMAGE still has a >5 dB of link margin. Transmitting at the engineering rate of 44 kbps the link margin jumps to 21.1 dB. The uplink command margin at apogee is 31.2 dB.

2.4 Command and Data Handling Implementation

The Observatory Command and Data Handling (C&DH) system is dominated by the two SwRI developed, RAD-6000 based, processors. These two processors, the CIDP and the SCU, provide information interconnections between all elements of the Observatory and the ground segment. The two computers use identical architecture and enclosures, and share many of the same modules. Table 2 shows the SCU and CIDP Modules. Table 3 describes their usage in the two boxes. Communications between the SCU and the CIDP is via a Mil-Std 1553 buss. In addition the SCU provides a 5 Hz data timing signal to the CIDP for mission time correlation. Using a distributed approach for the C&DH, consisting of two similar units, allowed the payload to be developed and checked out in parallel with the spacecraft development. Since the units are similar, cost was reduced. A distributed approach provides adequate processor memory and throughput budgets in the two systems, allowing additional capability to be implemented.

2.4.1 Payload C&DH

2.4.1.1 System Architecture

Figure 7 shows the overall bock diagram for the spacecraft command and data handling system. As shown in the block diagram, the heart of the spacecraft C&DH system is the SCU, a RAD-6000 based processor controlling operations of the spacecraft and communicating with a second RAD-6000 based processor (CIDP) dedicated to payload operations.

2.4.1.2 SCU Software

Software for the SCU was developed by LMMS Palo Alto flight software development group. The SCU flight software provides the following major functions for the Observatory:

1) Ground command receipt, processing, storage (for delayed command execution) and relay to the CIDP
2) Telemetry data formatting and downlink
3) Spacecraft attitude determination and control
4) Spacecraft thermal control
5) Spacecraft power management
6) Spacecraft housekeeping data acquisition, formatting, and storage
7) Management of the Mass Memory Module
8) Management of the engineering and high speed telemetry downlink
9) Safe/hold management of the Observatory

Applications software for the SCU was written primarily in Ada and used a considerable number of modules developed for the Gravity Probe-B project.

Table 2 SCU/CIDP Module Usage		
Module	**System Control Unit (fig. 14)**	**Central Instrument Data Processor (fig. 15)**
Power Supply Module	X	X
General Purpose I/O Module	X	X
Communications Memory Module	X	X
RAD 6000 Central Processor Module	X	X
Command Telemetry Module	X	
Mass Memory Module	X	
Instrument Interface Module		X
Power Distribution Module		X

Table 3 CIDP/SCU Module Services	
Module	**Description**
Power Supply Module	The PSM provides fully redundant +/- 5 and +/- 15 VDC power to the VME backplane
General Purpose I/O Module	For the SCU, the GPIOM provides the following resources to the spacecraft: 1) 50 channel thermistor interface system, 2) transponder bi-level telemetry monitor interface, 3) sun sensor pulse and analog interface, 4) AST 5 Hz strobe, 5) magnetometer signal processing, 6) watchdog timer pulse generation. For the CIDP GPIO provides the following services to the payload: 1) 50 channel thermistor interface subsystem used to read deckplate thermistors, 2) pulse control signals to step the radial deployer stepper motors
Communications Memory Module	The CMM provides the following resources for the SCU and the CIDP: 1) 4MB EEPROM w/EDC for storage of VxWorks operating system and flight applications code, 2) 32kB of fuse link PROM w/EDC for storage of bootstrap code, 3) redundant MIL-STD-1553 communications subsystem for communicating with the SCU.
RAD 6000 Central Processor Module	The RAD-6000 is the central processing unit for the SCU and the CIDP. The RAD-6000 executes software out of the 128MB of DRAM located on-board. For IMAGE the RAD-6000 is run at the maximum clock speed of 20 MHz. The RAD-6000 is a radiation hardened version of the R-6000 work station produced by Lockheed Martin Federal Systems Division.
Command Telemetry Module	The CTM provides the following resources to the SCU: 1) command receiving and decoding, 2) low telemetry downlink data formatting and encoding for 44 kbps to the transponder subcarrier input, 3) high rate direct modulation output for the 2.28 Mbps downlink data from the MMM, 3) record and playback data interface to the Mass Memory Module, 4) electrical interface to the transponder, 4) generates CCSDS fill frames, 5) Reed Solomon encoding of data for low rate data, 6)
Mass Memory Module	The MMM provides the following services to the SCU: 1) storage of spacecraft housekeeping data between ground passes, 2) storage of payload data between ground station passes, 3) downlink of spacecraft and payload data when commanded.
Instrument Interface Module	The IIM provides the following resources to the CIDP: 1) RS-422 serial output channel to the science instruments for commanding (6 provided), 2) RS-422 serial input channel for telemetry data from science instruments (6 provided), 3) timing synchronization signal driver (6 provided) containing 3600 pulse per revolution spin phase data plus nadir and sun proximity data.
Power Distribution Module	The PDM provides the following services to the CIDP: 1) 5A power service distribution to the instruments (seven provided), 2) 10A power service distribution to the instruments (one provided), 3) 2A power service to payload operational heaters (14 provided), 4) 2A service to RPI's radial deployers (2 provided), and 5) 2A service to the axial boom deployer wax thermal actuator (2 provided). Optically coupled solid state power switches are used for all power switching.

The Ada applications code runs under control of the VxWorks real time operating system. Hardware device drivers for the SCU were supplied with the hardware.

2.4.2 Payload C&DH

2.4.2.1 Payload System Architecture

Figure 8 shows the architecture of the payload command and data handling system. Based on a the RAD-6000 processor, the SwRI developed CIDP communicates with the SCU over a redundant 1553 bus and with six instrument control microprocessors over serial RS-422 interfaces. As shown in the block diagram, the CIDP also proves a hardware sync interface to the six instrument processors to inform the instruments of the spin rate, nadir passage, sun proximity.

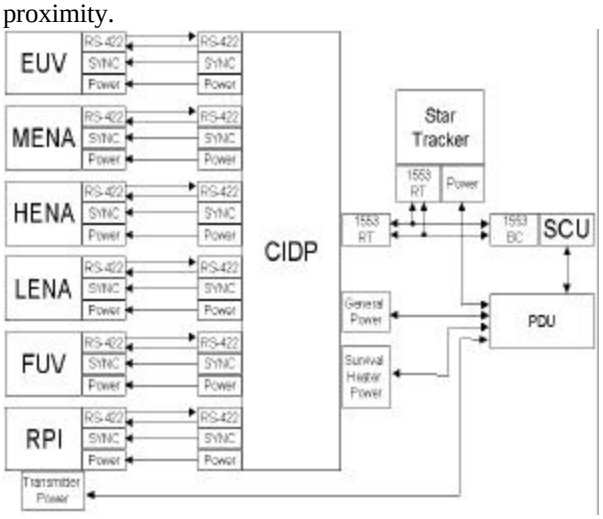

Figure 8 Payload electrical block diagram.

The CIDP provides control of 14 deckplate operational heaters. The operational heaters are used to elevate the temperature of the deckplate near the instruments to a temperature that is required for full science operations. These same heater zones are also controlled by mechanical thermostats set to turn on at the instrument's survival temperature when the CIDP is not operating.

2.4.2.2 CIDP Software

Software for the CIDP was developed in C++ at SwRI and provides the following services to the payload:

1) Instrument data acquisition, processing, and compression
2) Stored command processing
3) Command receipt (from the SCU), processing, storage (if a delayed command), and transfer to the instruments
4) Time/attitude synchronization with the spacecraft's Attitude Determination and Control system for generation of the nadir and sun pulse signals sent to the instruments
5) Deckplate thermal control

2.4.2.3 Instrument Processors

As shown in the block diagram of Figure 8, each of the science instruments is controlled by an internal microprocessor. These microprocessors, six in total, communicate with the CIDP over serial RS-422 telemetry and command interfaces running at approximately 38.4k baud. The instrument processors include Harris 20X10 (used in 3 instrument), 8085, TI 30C320, and an 8051. Software for these processors was developed by the institutions responsible for the development of the science instruments. The instrument processors performed the following functions:

1) Low level command execution within the instrument
2) Sensor data acquisition and formatting
3) CIDP telemetry communications
4) CIDP command communications
5) Instrument housekeeping monitoring and safing

Software for the processors was developed with an assortment of development tools, using an assortment of institutional coding standards.

2.5 Attitude Determination and Control Implementation

2.5.1 Attitude Determination and Control Architecture

The Attitude Determination and Control System (AD&C) controls spin rate and spin axis orientation for mission attitude acquisition, RPI radial antenna deployment, and normal mission operations. The AD&C also provides precise attitude knowledge to both the payload and the Science Mission Operations Control Center.

The AD&C Subsystem consists of a magnetic torque rod, a 3-axis magnetometer, a passive nutation damper, a sun sensor, and an Autonomous Star Tracker (AST). The AST is mounted on the spacecraft with its boresight oriented 10 degrees from the spin axis. It is a self-contained unit that autonomously calculates the 3-axis attitude of its boresight in the Mean of J2000 reference frame at a 5 Hz rate. A sunshade prevents sunlight or glint from the RPI axial boom from entering

the AST at mission attitude. A two-axis sun sensor provides spin rate and sun aspect angle information during the entire mission. This sun sensor is required because the AST can only reliably determine the attitude of its boresight at spin rates below 0.7 rpm.

A Magnetic Control System (MCS) controls both spin axis orientation and spin rate. It does this by controlling the magnitude and polarity of the torque rod dipole based on its orientation in the Earth's magnetic field as measured by the magnetometer. The torque rod lies in the Observatory spin plane. The MCS has four modes: Acquisition, Science, Ground Command, and Off. Acquisition mode drives the torque rod at its full 790 Am^2 capability. This mode is used for the attitude acquisition maneuver and to spin up the spacecraft for RPI radial antenna deployment. Science mode drives the torque rod at a low level to counteract environmental disturbances through the remainder of life. Ground Command allows the Operator to enable/disable the Torque Rod, and change its level and polarity. Off mode disables the torque rod.

The MCS will bring the spin axis to within 1° of orbit normal in 5 days. Following the final antenna deployment, the MCS is left in Acquisition mode to trim the spin rate to 0.5±0.01 rpm and trim the spin axis to orbit normal. The MCS will then be switched to science mode for the remainder of the mission.

The nutation damper damps nutation caused by Observatory separation from the launch vehicle.

2.5.2 Aspect Sensors

2.5.2.1 AST

IMAGE AD&C system includes a LMMS Autonomous Star Tracker for attitude aspect determination. As the Observatory spins the AST provides a spin axis vector in inertial space. The AST communicates with the SCU over a redundant MIL-STD-1553 communications bus.

2.5.2.2 Magnetometer

IMAGE uses an MEDA, Inc. 3-axis magnetometer for magnetic aspect information. The magnetometer is powered by a dedicated magnetometer power supply (MPS) containing an EMI filter and a single 28/28 DC/DC converter .

2.5.2.3 Sun Sensor

An Adcole Corp enhanced sun sensor provides IMAGE with both a sun crossing pulse and a 7 bit sun angle code. The 7 bit code provides a coarse sun angle measurement accurate to 1 deg, supplemented by 3 analog voltages that provide the fine angle component of the measurement with approximately 0.004 deg resolution. The sun crossing pulse is used for spin rate determination and the sun angle information is used for spacecraft attitude information in cases where the AST is not operating.

2.5.3 Actuators/Dampers

2.5.3.1 Magnetic Torque Rod

A single McIntyre Electronics Associates 790 AM^2 magnetic torque rod provides control authority for IMAGE. Featuring redundant coils, the torque rod is controlled through an analog interface with the SCU.

2.5.3.2 Nutation Damper

The damper is a steel tube formed into a ring and partially filled with mercury. The ring lies flat in the spin plane on the +Z panel and centered on the spin axis. Nutation causes the mercury to roll around the interior of the ring. Shear (friction) between the tube and the mercury dissipates energy, damping the nutation.

2.5.4 AD&C Operations

The AD&C operations sequence is as follows.

Following separation from the launch vehicle, the AD&C subsystem will align the Observatory's positive spin axis (in a right hand rule sense) parallel to the negative orbit normal to within 1°.

Following orientation to the orbit normal, the RPI antenna deployment will be performed by the Payload. The spacecraft AD&C system will maintain the spin rate between 0.5 and 20 rpm during RPI antenna deployment.

The P/L controlled axial antenna deployment will occur after radial antenna deployment is complete.

During science data acquisition, the spin axis will be maintained parallel to the orbit normal to within 1°. Other key modes of the AD&C system are listed and described below.

<u>Spin Rate</u>:
After RPI antenna deployment, the Observatory spin rate will be maintained at 0.5 ± 0.01 rpm.

Spin Axis Stability:
After RPI antenna deployment, the spacecraft transverse rates relative to the principal axis does not exceed 0.005°/sec.
Spin Direction
The Observatory direction of rotation is opposite to the direction of its revolution about the earth in its orbit. The spin angular momentum is the $+Z_{obs}$ direction, i.e., right-hand rule spinner.

2.6 Thermal Control Implementation

2.6.1 Observatory Thermal Control Architecture

The Observatory thermal control subsystem maintains the science instruments and other equipment within the specified temperature limits. Most of the heat generated by the instruments is conducted through the payload deck, by means of embedded heat pipes, to radiators mounted on the perimeter of the spacecraft structure. The remainder of the instrument heat is removed by radiation to space. Spacecraft equipment is mounted on panels located under the payload deck. Waste heat from this equipment is removed primarily by radiation. The side panels and the ±Z panel inner surfaces are covered with multi-layer insulation (MLI) to accommodate large seasonal temperature variations. The MLI is equipped with RF grounding straps to the spacecraft structure. With the exception of heaters, all thermal control hardware is considered passive.

Software in the CIDP controls electrical resistance heaters located on the Payload Deck, which ensure that minimum operating temperature limits are satisfied. These heaters are controlled using temperature data from thermistors mounted at the individual heater locations. Thermostatically controlled heaters are used to maintain payload survival temperature limits. The heater subsystem has manual override capability through software changes. SCU-controlled heaters thermally protect spacecraft components. Ground commands provide manual override capability.

The on-orbit thermal radiation environment used in the IMAGE S/C thermal control design is summarized in Table 4.

Table 4. On-Orbit Thermal Radiation Environment

Parameter	Minimum	Nominal	Maximum
Solar flux, W/sq m	1316	1371	1428
Albedo	0.25	0.30	0.35
Earth emission, W/sq m	223	226	237

2.6.2 Payload Deckplate Thermal Management

2.6.2.1 Heat Pipes

A total of 16 heat pipes, embedded in the payload deckplate, are used to move heat from beneath the science instruments and transport the heat to 14 OSR covered radiator panels located around the center of the Observatory. The constant conductance heat pipes axial grove style, are ammonia filled, 2 cm OD pipes capable of transporting the payload generated heat to the radiators located around the spacecraft body. The heat pipes are joined to the radiator panels through an aluminum extrusion that passes through a hole in the side panel and is subsequently bolted and bonded to the radiator panel.

2.6.2.2 Heater Control Units (HCU)

The payload deck is divided into 14 thermal control zones. Each of these zones has a dedicated Heater Control Unit (HCU) to provide the electrical interface between the zone's heaters, thermistors, and the CIDP. Each HCU consists of a set of four series/parallel redundant thermostats and terminal blocks to implement the wiring to the CIDP. In operation the mechanical thermostats are used to control the survival temperature of the instruments since the CIDP may not be turned on (e.g. safe-hold mode) to provide control. Once the CIDP is turned on it provides control to a second set of heaters connected through the HCU. The CIDP depends on deckplate mounted thermistors for temperature information for set point control. The CIDP raises the instruments to their operational temperatures and maintains the operational temperature throughout normal payload operations.

2.6.2.3 Deckplate Heaters

The deckplate heaters are standard polyimide films with dual elements, capable of providing 5.5 watts each. In operation 4 heaters are active in each of the 14 heater zones. The heaters are mounted with adhesive to the deckplate.

2.6.2.4 Optical Surface Reflector (OSR)

The 14 payload radiators are 2.3 mm thick T6061-T6 aluminum covered with Indium Tin Oxide (ITO) coated ceria doped Optical Solar Reflector (COSR). Optical properties of the COSR are alpha = 0.09 BOL and epsilon = 0.8 BOL.

2.6.3 Spacecraft Subsystem Thermal Control

2.6.3.1 Spacecraft Thermal Control Overview

The spacecraft thermal control system uses MLI blankets, COSR radiator panels, black anodized surface finish, and survival heaters to achieve thermal control. The clear anodized side panels, almost completely covered in Gallium Arsenide solar cells, yield a net alpha/epsilon of 0.82/0.84. The top and bottom closeout covers are also clear anodized (alpha/epsilon = 0.32/0.82 BOL) and covered in solar cells. The interior surface of the side panels is covered with MLI, yielding an effective emissivity of 0.02. The center tube of the spacecraft is alodined and the four shear panels are black anodized. Equipment boxes used for spacecraft control feature high emissivity surfaces.

2.6.3.2 Battery Radiator

The 21 AH super NiCd battery is mounted to a dedicated radiator. The radiator is approximately 450 sq. cm in radiation surface and is also covered with COSR.

2.6.3.3 Transponder Radiator

The transponder also has a dedicated COSR covered 0.09 thick aluminum radiator panel. In the case of the transponder the radiator is 650 square cm in radiating surface area.

2.7 Contamination Control Implementation

2.7.1 Deckplate Purge System

The IMAGE science instruments are extremely contamination sensitive. Accordingly, a central purge system was added to the payload deck and provides dedicated purge interfaces to each instrument. The tubing used for the central purge system is 0.25 thick diameter Teflon. A total of 10 purge lines are routed to a central payload purge manifold. The exterior purge interface to the payload is a 6.4 mm diameter tube, which is connected to the SLC-2W purge flow system to maintain purge to the instruments until launch. A composite flow rate of 6 SCFM is supplied to the 10 purge loads.

2.7.2 Purge Panel Ground Support Equipment

A purge panel was developed uniquely for IMAGE. The purge panel is designed to flow GN2 to the payload from one of two attached K-bottles or an external GN2 source. The purge panel can be connected directly to individual instruments for instrument level testing or can be connected to the payload deckplate purge manifold. The panel includes dedicated flow meters for each instrument. An onboard electronic monitor provides a telephone interface to be used to issue a warning of low gas pressure.

2.8 EMC Implementation

The Observatory systems meet EMI levels specified in the IMAGE Program EMC Control Plan, and the conducted electromechanics safety interference margins as specified in MIL-E-6051D. These levels are achieved by using MIL-STD-461 filter modules in front of all DC/DC converters used in the instruments and the spacecraft subsystems. Component conducted and radiated emission levels do not exceed the levels specified in MIL STD 461C sections CE01, CE03 and RE02. All Observatory secondary power is converted at greater than 150 kHz so that converter noise is not sensed by the RPI receiver.

The radiated emissions levels are about 10 dB below the Mil-STD 461C levels in the frequency range of 3 kHz to 150 kHz, again, the RPI sensitive region. Achieving this low level of radiation was difficult and somewhat expensive as it involved designing the spacecraft as a Faraday cage. Beryllium/copper finger stock was used around the intersections of all major structural panels to reduce radiated EMI levels. Elastomeric EMI gaskets were placed around the apertures of all the science instruments. The 200 mill thick aluminum cabinets used to house all of the instruments and spacecraft electronics for ionizing radiation protection also helped reduce radiated EMI levels. Finally, a strict project cable harness design specification was imposed on all harness developers. Cable was all double shielded, terminated in Glennair shielded backshells, and all power distribution wiring was handled with twisted shielded pairs. An outer wrap of Teflon tape provided electrical isolation of the heavily shielded cables from the conductive deckplate.

A special consideration on the EMI design of the IMAGE Observatory was the coupling of RPI radiated EMI into the solar array. To address this concern the PDU design was modified to add filters between the solar array inputs and the distributed power outputs.

2.9 Payload Implementation

2.9.1 Instrumentation

2.9.1.1 Summary of Instrumentation Performance and Resources

The detailed requirements of the IMAGE science instruments are shown in Table 6.

2.9.1.2 Instrument Mounting and Access

The IMAGE science instruments are attached through No. 10, 1900-32 UNJF-3A titanium (6 AL, 4 V) or alloy steel A-286 bolts into stainless steel locking inserts (primarily floating type NAS1385-3CM) placed in the laminated honeycomb deckplate. The design provides a margin of safety for attachments 1.0. Each instrument is provided with two electrically conductive inserts to aid in grounding. In addition, two insert locations at each instrument are non-floating types and are used as alignment pins.

With the Observatory side panels and the top panel removed access to the instruments is good. The instruments all mount from the top with the exception of the RPI Z-axis preamp. Devices known as "click-bonds" were used to secure cables and purge tubes to the deckplate. These devices are in turn epoxy bonded to the deckplate.

Should it prove necessary to remove an instrument from the deckplate one of the side panels will have to be removed to gain access. For a large instrument such as FUV SI, it is necessary to remove multiple side panels plus the top panel. The time required to remove the panels is generally less than a day.

2.9.2 Payload Support Systems

2.9.2.1 CIDP Hardware And Software

The hardware design and construction of the CIDP is described in Paragraph 2.4. Data is acquired by the CIDP from the science instruments once each two minutes (spin period). The science data along with CIDP housekeeping is passed to the SCU over the MIL-STD-1553 bus on a 0.1-second cycle time. The SCU and CIDP establish this "heartbeat pulse communication" as soon as the CIDP is turned on. Spacecraft state vector and time are passed to the CIDP at the same 1/10 second rate as used for the heartbeat message. Science instrument data are passed back to the SCU at the same rate the state vector and time are passed to the CIDP.

Commands are passed to the science instruments asynchronously as they are received from the SCU. Extensive use is made of a Stored Command Processor capability in the SCU to reduce the need for real-time commanding.

The PDU provides switched and fused +28 VDC power to the instruments as well as the payload deckplate heaters and the RPI radial and axial deployers.

2.9.2.2 HCU and Heaters

The Heater Control Units (HCU) described earlier provide local thermal control over the fourteen thermal zones described in paragraph 2.6.2.2.

2.9.2.3 Purge System

The payload purge system is described under the section on contamination control in Paragraph 2.7.1.

2.9.2.4 Payload to Spacecraft Electrical interfaces

The payload actually has very few interfaces to the spacecraft. All telemetry and commands are passed over a single redundant MIL-STD-1553 interface. There are no other data interfaces used. Power is passed over six switched and current limited +28 VDC connections. The remaining interfaces include thermistors used by the spacecraft for thermal monitoring during times when the CIDP is not operating. The simplicity of the electrical interface proved to be a real benefit when the payload was integrated with the spacecraft.

2.9.3 Payload I&T

Payload I&T began in December of 1998 as the HCUs, purge system, and cable harness were installed on the backup deckplate. In late December the HENA instrument was delivered to the payload I&T facility located on the campus of the Southwest Research Institute. Figure 9 is a photograph of the facility taken during the integration of the science instruments to the deckplate at SwRI.

At SwRI all of the instruments were tested using the flight model CIDP, flight wiring harness, and the flight software. An SCU simulator was assembled from parts of a spare CIDP and was used extensively for integrated payload operations. Figure 10 is a block diagram of the payload integration test facility. Each instrument went through a series of interface verification tests prior to being installed on the deckplate. Once the electrical

Table 6 Payload Resource Requirements						
Element	**Component**	**Mass (kg)**	**Avg. Power (watts)**	**Unobstr. FOV (deg.)**	**TLM Allocation (kbits/orbit)**	**Operating Temp Limits**
FUV	SI	20.2	2.4	15 x 15		-20/+30
FUV	MEP	5.7	6.9		317	-20/+40
FUV	WIC	5.5	1.2	19 x 19		-20/+30
FUV	Geo	1.2	0.7	1 x 1		-20/+30
FUV	Cables & Hard.	1.0				
EUV		15.6	15.5	34 x 90	118	-20/+30
HENA	Sensor	12.7	9.9	90 x 136		-20/+40
HENA	Electronics	6.1	4.7		135	-20/+40
HENA	Cables	0.7				
MENA		13.3	16.0	20 x 157	146	-20/+30
LENA	Sensor	15.5	4.5	14.5 x 90		-20/+30
LENA	Electronics	8.0	9.3		26.5	-20/+40
RPI	Radial Antenna Assm.	38.2				-20/+40
RPI	Axial Antenna Assm.	5.65				-20/+40
RPI	Electronics	9.45	31.5		414	-20/+40
CIDP		11.0	29		13	-25/+50
HCU		2.94				-40/+40
Cable Harness		7.0				
Misc. Hardware		3.7				
Totals		**209.9**	**131.6**		**1169**	

Figure 9 Photograph of payload integration and test activities at Southwest Research institute (SwRI). The instrument being integrated is the High Energy Neutral Atom Imager (HENA), developed for IMAGE by the Applied Physics Laboratory (APL).

interface was confirmed to be safe for testing, the instrument was subsequently attached to the flight wiring harness and the flight CIDP. Full functional tests were run on each instrument individually followed by a series of tests of the integrated payload. Finally a comprehensive EMI test series was conducted using an EMI enclosure designed and constructed by Battel Engineering for the IMAGE project. The enclosure was assembled inside the payload I&T highbay at SwRI, preserving the clean test environment for the instruments. Figure 11 shows the IMAGE payload undergoing EMC testing at LMMS.

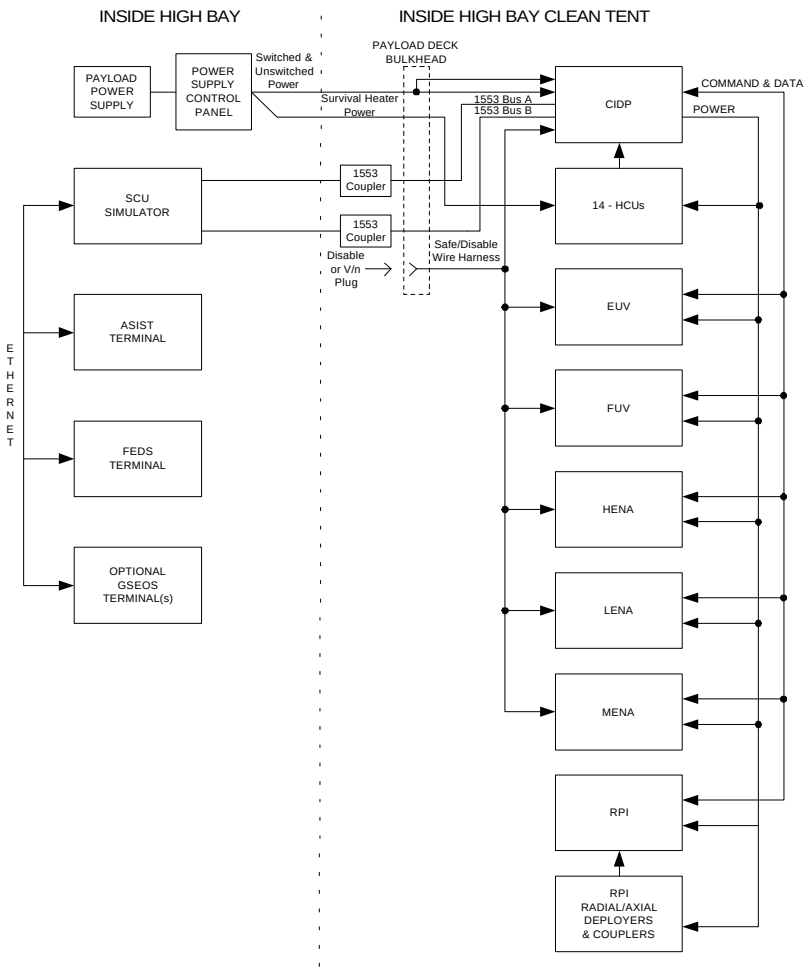

Figure 10 Electrical block diagram of the IMAGE payload electrical ground support equipment used to test the integrated payload prior to delivery of the payload to LMMS.

After completion of the EMC tests the science instruments were removed from the deckplate, placed back in their original shipping containers, and shipped to Moffett Field, California onboard a small charter cargo jet to minimize the disruption of the instrument purge, thus minimizing contamination. The instruments were received at Moffett and transferred the few hundred yards to the Observatory I&T facility at LMMS Building 156. The GSE and the flight backup deckplate were shipped by standard air cargo.

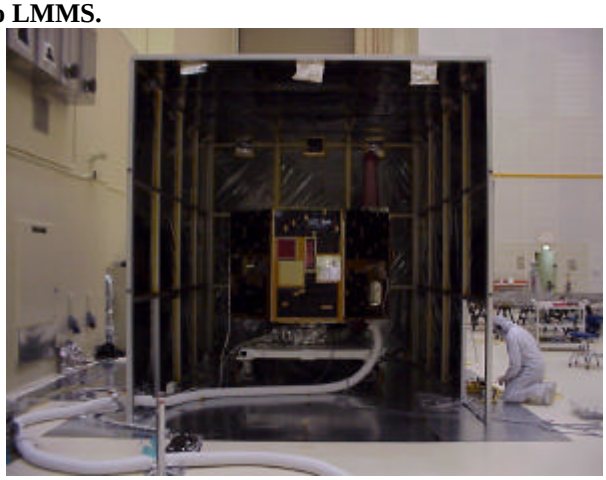

Figure 11 Photograph of the EMI test chamber built for IMAGE for use inside a clean room area.

2.9.4 Observatory I&T

The spacecraft and payload underwent parallel integration and development testing at LMMS and

SwRI. Following completion of these tests, the IMAGE payload was delivered to LMMS on 18 March 1999 for integration with the spacecraft. Upon delivery to LMMS the instruments were remounted to the backup deckplate and re-tested. After approximately 3 weeks of testing as a payload, the instruments and support equipment were transferred to the flight deckplate already assembled with the spacecraft. Shortly after mechanical integration the payload was electrically integrated with the spacecraft and within one day the two elements of the Observatory were communicating and operating as planned.
Following a very successful payload integration the Observatory was put through an extensive series of functional tests followed by an Observatory level sine vibe test, pyro shock test, EMC test, and finally a thermal vacuum test). A spin balance test will complete the environmental test program for IMAGE

Plans are to deliver the IMAGE Observatory to the NASA Western Range (WR) launch complex in December, 1999 to prepare for a launch on 15 February15, 2000

3. MIDEX Program

The Medium-class Explorer program is managed by the Explorers Project office (Code 400) at the NASA Goddard Space Flight Center. MIDEX is one of the series of cost and schedule capped, principal investigator (PI) led, programs funded under the NASA Office of Space Sciences (Code S) budget. The Explorer program has been in operation since 1958 and has implemented or supported over 70 missions in the disciplines of astrophysics and space physics. The Explorer program was restructured in 1994 in an effort to provide more flight opportunities for medium to small sized, highly focussed, investigations. In addition to MIDEX the new flight opportunities include Small Explorers (SMEX) and University Explorers (UNEX). MIDEX missions are typically cost capped at < $100M for the definition and development phases and <$25M for the mission operations and data analysis (MO&DA) phases. The era of the traditional Delta-class explorer mission was brought to an end with the initiation of MIDEX.

Acknowledgements
The authors would like to acknowledge the following Lockheed Martin Missiles and Space Corporation staff members or their significant contribution to the development of the IMAGE spacecraft: Mr. Dale Vaccarello, Mr. Sam Housten, Mr. Gerry Grismore, and Mr. Dino Sakkas.