Pre-Flight Characteristics of the U.S. Air Force Academy's FalconSat-1

Edited by:
Raja Chari
Chief Cadet Systems Engineer
Department of Astronautics
U.S. Air Force Academy, CO
(Currently Second Lieutenant, USAF)

Abstract

FalconSat-1 is the first of a series of small satellites being designed, built, and operated by cadets at the U.S. Air Force Academy. FalconSat-1's primary mission is to carry the Charging Hazard and Wake Studies-Long Duration (CHAWS-LD) space physics experiment. This mission is accomplished by cadets from various academic departments working with faculty mentors and experts from industry and other universities. The culmination of this work will come on 15 Sep 99, when FalconSat-1 is lifted into a nearly sun-synchronous orbit atop the Air Force's new Minotaur launch vehicle. This paper summarizes the design of each major subsystem. The electrical power system consists of solar panels mounted on 5 of 6 sides of the cubic-like structure of the satellite supplemented by rechargeable batteries. The communication system uses Gaussian Minimum Shift Keying for modulation of signals along with a hybrid coupler for polarization purposes to drive it two transmitters and receivers. A cadet team has developed the software for the spacecraft and ground control as well as operations procedures for the cadet run ground station. The attitude determination and control system uses a magnetometer and an electromagnetic torque rod to keep the satellite aligned with the earth's field lines.

INTRODUCTION

Program Overview

The United States Air Force Academy's small satellite program was initiated in 1993 with the primary objective to motivate cadets toward space by providing "real world" satellite design, fabrication, test, launch, and operational experience. Cadets from different academic departments, including computer science, electrical engineering, engineering mechanics, management, physics, and astronautics, work together with faculty mentors and experts from industry and other universities to accomplish the program objectives. Additional goals of the small satellite program are to enhance the Academy's curriculum and to support DoD research and development initiatives by integrating and flying payloads with military applications.

The program is based on a nominal 3-year spacecraft development cycle. FalconSat-1 is scheduled to be launched on a converted Minuteman II missile in September 1999. The satellite will carry one scientific payload: the Charging Hazards and Wake Studies-Long Duration or CHAWS-LD experiment.

The satellite has a mass of 50kg with a nearly cubical shape that is 18.1”x18.1” by 16.75” tall with body mounted solar arrays capable of producing about 24W of power. The history of the Small Satellite Program shows several successful balloon launches and one launch into space. The Air Force Academy’s first ever launched spacecraft built by cadets and faculty, was named Falcon Gold. It was launched into a geo-transfer orbit on an Atlas/Centaur in October 1997. The Falcon Gold experiment successfully demonstrated the potential for new cost-effective tracking technologies using GPS for geo-synchronous and high altitude spacecraft. This was the first time that a spacecraft received GPS C/A code while at altitudes above the GPS constellation.

FalconSat – 1 Project Life Cycle

The FalconSat-1 project life cycle consists of several phases as shown in Figure 1.

The conceptual phase and the initial design validation phase had been completed with the construction and test of the balloon prototype spacecraft in Spring 1998. The FalconSat-1 design phase started in August 1998 and will end with the qualification of the FalconSat-1 Test Unit in April 1999. The qualification phase is intended to start in March 1999 and ends with the integration of the spacecraft to the JAWSAT multiple payload-adapter and the final qualification test after integration. The initial operation phase includes the pre-launch operations after shipment to Vandenberg Air Force Base and ends after orbit injection when the software is uploaded to the spacecraft. The operational phase starts with the completion of the software upload process and includes the standard operation of the spacecraft for about two years. Within these two years the spacecraft can be used to educate cadets in mission operations. Project termination will take place when the decision to stop operations is taken but not earlier than December 2001.

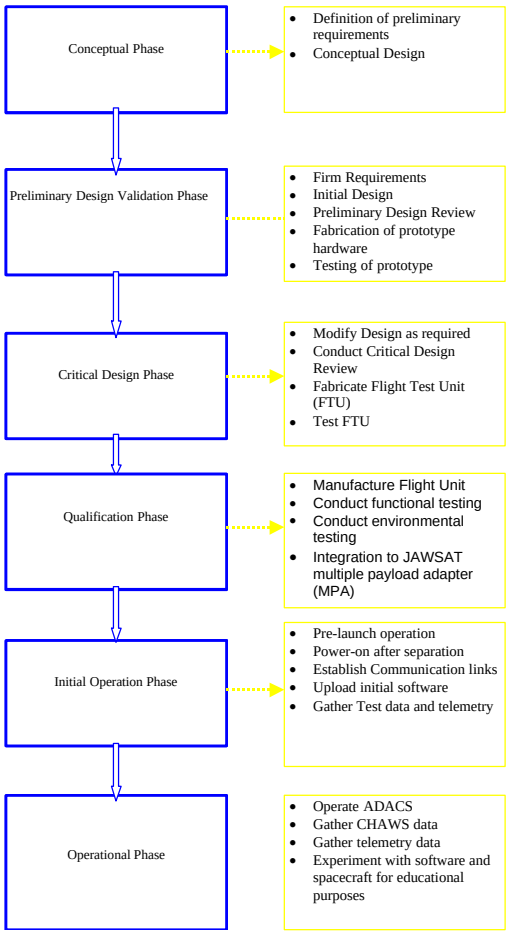

Figure 1: Project Life-Cycle

MISSION CONCEPT

FalconSat-1 Space Mission Architecture

Mission Overview

FalconSat-1 is a small satellite carrying the Charging Hazards and Wake Studies-Long Duration (CHAWS-LD) experiment. The purpose of the mission is to determine the effects of spacecraft charging in a low-earth orbit over a time period of at least six months. The primary objectives of the mission are to: (1) Provide data that will

allow scientists to analyze the effects of charging on spacecraft in low-earth orbit over a long time period; (2) Validate FalconSat-1 system design by transmitting telemetry data, gathered by the different subsystems of the spacecraft bus, to the mission control center; (3) Provide a flight experience with new computer hardware and software developed for the program; (4) Provide a ground station test bed for education and training purposes and allow cadets to gain hands on experience in space operations. The spacecraft will be launched into a nearly sun-synchronous orbit on a converted Minuteman II missile in September 1999. Mission duration is planned to be about two years. The overall configuration of FalconSat-1 is shown below in figure 2.

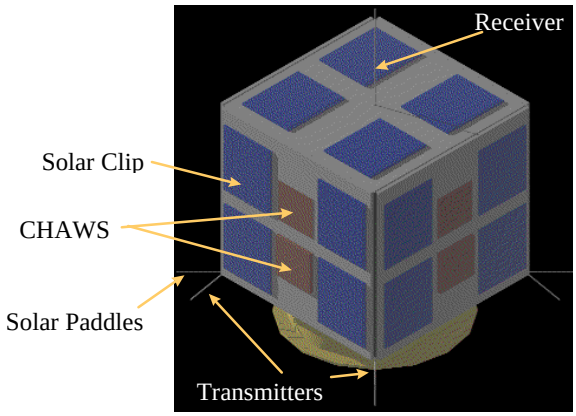

Figure 2: Rendered FalconSat-1 Drawing

The mission control center is at the Air Force Academy. The mission control center is responsible for checking the satellite's health status and acquisition and storage of the payload data. This data can be accessed by the principle investigator and others via the Internet.

Orbit

The orbit of the spacecraft is circular and nearly sun-synchronous. The altitude is 750km with a 100° inclination and a longitude of ascending node of 265 ° at separation. Until February 2000, the satellite will follow the terminator line and will experience 100% sunlight. After February, it will gradually begin experiencing eclipse times which will reach a maximum of 33 minutes of a 99 minute orbit in March of 2001. Figure 3 shows the initial ground track of the satellite following insertion.

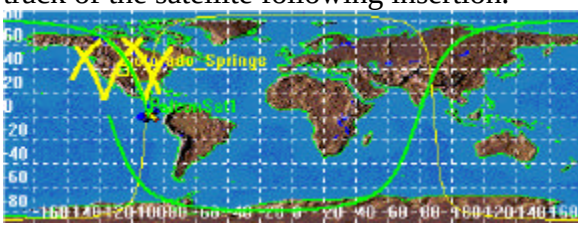

Figure 3: The heavier line represents the FalconSat-1 ground-track for the first orbit after launch. The thinner line is the terminator line. The X-shaped lines represent passes within range of the Academy ground station.

The following table provides a summary of the passes on the launch day. The data shows a pattern of 6 passes a day with a maximum pass time of 14 minutes. This pattern holds true for the remainder of the orbit as the satellite will continue to pass in view of the ground station for 3 consecutive orbits twice a day although the times of these passes will vary throughout the mission lifetime. The Classical Orbital Elements (COEs) are in Appendix A.

Access	Start Time (UTCG)	Stop Time (UTCG)	Duration (sec)
1	00:04:06.80	00:18:29.68	862.883
2	01:43:50.08	01:56:08.99	738.918
3	12:11:50.19	12:23:54.39	724.198
4	13:49:24.87	14:03:46.38	861.512
5	15:29:23.00	15:38:29.19	546.185
6	23:22:08.97	23:35:09.61	780.644

Table 1: FalconSat-1 To Academy Access Summary Report for 15 Sept 99.

Sub Systems

FalconSat-1 is a small satellite 16.75” tall with a square base 18.1”x18.1” (see Fig.2). The Payload Attach Fitting (PAF) adds another 4” to the height of the spacecraft. The spacecraft bus consists of the following subsystems: Electrical Power (EPS), Communications, Command, Telemetry and Data Handling (CT&DH), Attitude Determination and Control System (ADACS), Structure, and the CHAWS-LD experiment. The first four subsystems are mounted in Aluminum trays, which are part of the frame stack assembly shown in figure 4. The four transmit antennas are mounted at the bottom of the spacecraft and the receive antenna at the top. The solar panels are body mounted on the outside of the spacecraft. The CHAWS-LD data sensors are integrated into the solar panels. Thermal control is passive.

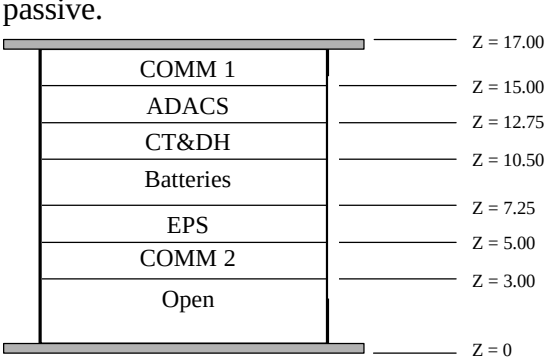

Figure 4: Subsystem Locations in Frame-Stack Assembly

Payload: CHAWS-LD

The Falconsat-1 payload is the CHAWS-LD experiment. The aim of this experiment is to determine the electric charge characteristics of spacecraft in low-earth orbits. The particular orbit will allow gathering data at almost all latitudes and especially near the poles where plasma is denser. The data will be very useful for future spacecraft missions.

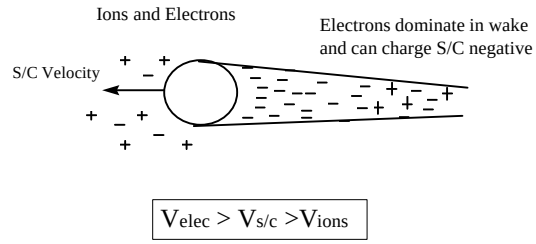

Figure 5: Spacecraft charging mechanism. The charging of the spacecraft moving through the plasma is shown. In the wake region mostly electrons will accumulate.

The payload concept is straightforward. Voltage and current sensors are installed on the four sides of the spacecraft. When FalconSat-1 moves through the space plasma, it creates a wake region behind it, in which primarily electrons accumulate. Thus, the electrically isolated sections of the voltage sensors on the wake side will be negatively charged (see Fig.5). The current sensors reject electrons and collect ions from the space plasma, providing a current that is correlated to the ambient plasma density. In addition, monitoring the relative amount of current each detector collects will allow gathering information about the attitude of the spacecraft relative to the plasma flow.

The sensors are made of sheets of stainless steel and an electric circuit board material stacked together with aluminum and Teflon spacers. (See Fig.6 and Fig.7). Each sensor requires a 4.0”x 4.0” opening on the inside surface of the spacecraft structure and a 3.5”x3.5” opening on the outside of the structure. One voltage and one current sensor are mounted in the center of each side of the spacecraft. The surface of the voltage sensors, which is exposed to the plasma, is the metalized surface of a circuit board. The exposed surface of the current sensors is an electro-formed stainless steel mesh. The detector electronics are sealed from the space environment.

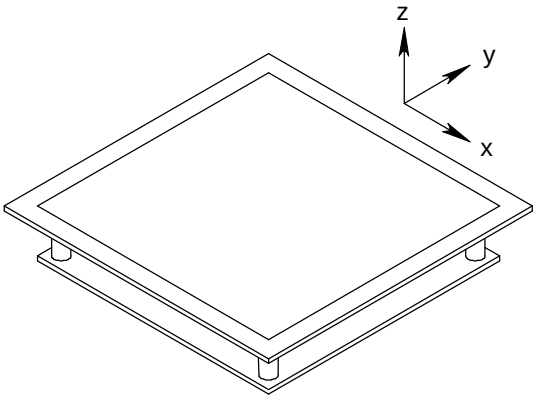

Figure 6: Construction of the CHAWS-LD Voltage Sensor.

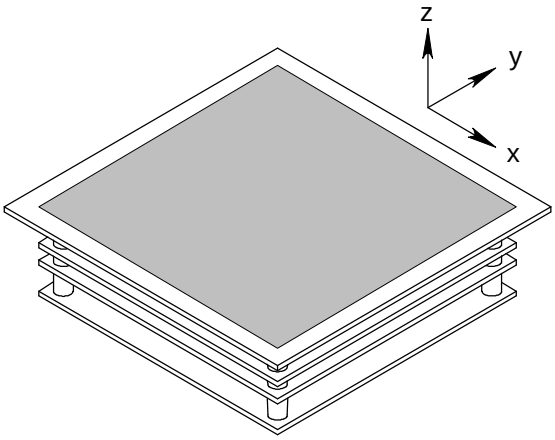

Figure 7: Construction of the CHAWS-LD Current Sensor.

For data collection the 12 voltage outputs, 3 from each sensor, are connected to analog-to-digital converter channels of the Falconsat-1 embedded controller cards (ECCs). The ECC forwards the data to the main flight computer so it can be transmitted by the communications subsystem and sent to the mission operations center. Table 2 summarizes the payload requirements to support the CHAWS-LD sensors.

Flight Parameter	CHAWS-LD Requirement
Orbit altitude	300-750 km
Orbit inclination	≥ 81.5°
Spacecraft attitude	Rotating to point successive sensors into ram
Spacecraft attitude accuracy	S/c must be pointed ±25° of the s/c velocit vector. Data collection within 25° of eith geographic pole.
Spacecraft power, + 15 V line	225 mW
Spacecraft current, + 15 V line	15 mA
Spacecraft power, – 15 V line	225 mW
Spacecraft current, – 15 V line	15 mA
Number of A/D channels	12
Resolution of A/D channels	≥ 12 bits
Sample rate	≥ 10 Hz
Onboard data storage	≥ 2 Mbyte
Data transfer rate	≥ 9.6 kbits/s
Spacecraft rotation rate	1-10 RPM

Table 2: Payload Specifications

Structure

The structure uses a frame stack concept (see Fig. 8). The frame stack accommodates the subsystems and the CHAWS-LD experiment. Four panels of honeycomb structure accommodate the solar cells and the CHAWS sensors. The space between the frame stacks and the exterior panels is used for the installation of the wiring harness. Solar cells are also mounted on the top-plate together with the receive antenna.

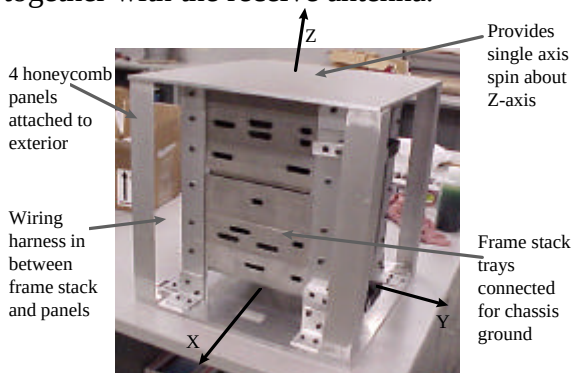

Figure 8: Structure Configuration

The spacecraft slowly spins around the z-axis, which is oriented out of the top of the spacecraft and centered in the bottom of the base plate. The material used for the subsystem trays is cast aluminum A356. The columns are made of 6061-T6 aluminum and both the top and the bottom plate consist of 7075-T6 aluminum. The frame stacks are electrically connected with each other to ensure a proper chassis ground for all electrical components inside and outside the

trays. Inside the trays, critical electrical components are shielded with aluminum and mounted to the trays such that they are electrically connected. Proper grounding is ensured through connecting the power system grounding point to the chassis of the spacecraft. The bottom plate accommodates the transmit-antennas and the connections for the payload attach fitting (PAF) shown in figure 9.

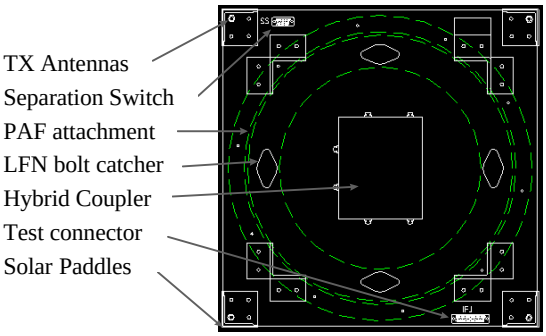

Figure 9: Bottom Plate Configuration

Thermal Control

A thermal analysis has shown that no active thermal control is necessary. The mean operating temperature will be between 0-20° C. Critical parts of the spacecraft such as transmitters and batteries will have sensors installed to monitor the temperature. This temperature data is transferred to the main flight computer and communicated to the mission operations center as part of the standard telemetry stream.

Electrical Power Subsystem

The electrical power subsystem provides regulated power to all spacecraft subsystems including the payload. The system must provide sufficient power during eclipse time and be capable of recharging the battery during sun time. Electrical power is generated by 20 solar clips mounted on the outside of the spacecraft and by one battery with 10 NiCd cells. The solar arrays consist of 19% efficient GaAs cells (see Fig 10). The average power provided is 24 Watts. The battery consists of NiCd cells with a minimum capacity of 4.4 Amp-hr and 1.0V to 1.6V per cell giving a nominal bus voltage of 12V. An engineering model is shown in figure 11.

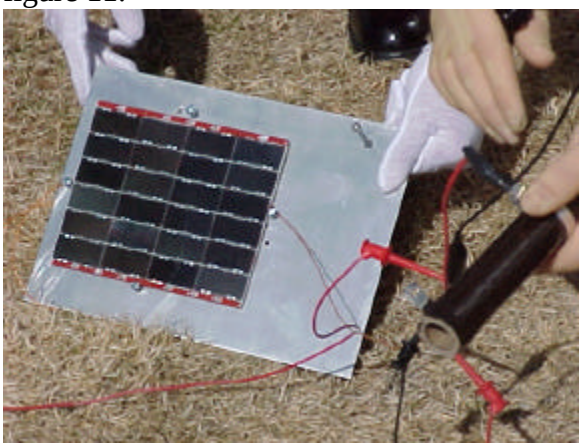
Figure 10: Solar Clip

Figure 11: Engineering Model of Battery

Different voltages are required by the components of the spacecraft subsystems. Thus voltage regulation becomes necessary. Voltage regulation is decentralized which means that the regulators are installed in the subsystems. Table 3 summarizes the converters and the units they are being used for.

Converter	Components Regulated (Tray)
+/- 3 V	Modem (ADACS)
+/- 5 V	ECC0, TCE0 (ADACS)
+/- 5 V	ECC1, TCE1 (EPS)
+/- 7.5 V	Transmitter0 (Communications 2)
+/- 7.5 V	Transmitter1 (Communications 2)
+/- 15V	Torque Rod, CHAWS-LD, Magnetometer (ADACS)

Table 3: Voltage Converter Usage

The flight computer controls the power subsystem. The computer has the task to regulate power during the time after separation and switching functions during normal operations. These functions include the switching of power to the payload, to the data handling system and to the attitude determination and control system. The main computer must also be able to switch the electrical power subsystem between different modes such as from running off of batteries or running from solar cells while also charging batteries. The different energy budgets corresponding to different modes of operation can be found in Appendix B.

The power system is initiated after separation from the launch vehicle by micro-switches. The flight computer decides which components are to be powered on by turning on the voltage converters. The flight computer controls transfer of power from the solar panels to the power subsystem. This power transfer is tuned by software in the flight computer.

Command, Telemetry and Data Handling Subsystem

The Command, Telemetry and Data Handling subsystem (CT&DH) is responsible for the control of all functions of the spacecraft bus, the CHAWS experiment, handling the EPS and telemetry schedules and transmitting telemetry data to the mission control center.

The CT&DH system consists of three main components, the flight computer and two embedded controllers as shown in figure 12.

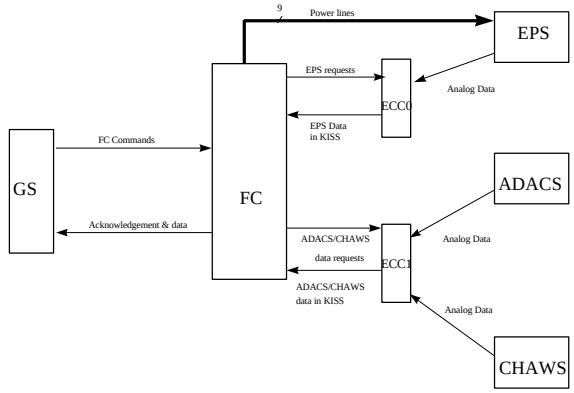

Figure 12: CT&DH Flow Diagram

The flight computer (see fig. 13) is a NEC V53 space-qualified flight computer with 1 MB of EDAC program memory and a 4 MB RAM disk.

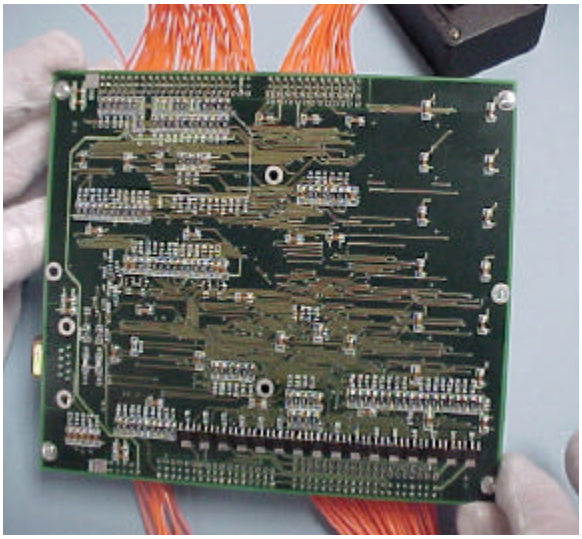

Figure 13: Flight Computer

The flight computer runs the Spacecraft Operating System (SCOS) – a real time multitasking operating system. The UT131ECC is being used for the embedded controllers. The embedded controller cards are primarily used for analog-to-digital conversion in collecting telemetry/satellite status data. The main flight computer performs all switching functions.

The flight computer software consists of three parts: the software in the boot ROM Flight Boot Loader (FBL), the SCOS and the application code. SCOS and the application code will be uploaded to the spacecraft after launch. FBL is intended to allow the efficient loading of software into the program memory and provide some diagnostic functions. The programs that make up the operational software include the operating kernel (SCOS kernel), and PHT (Prototype Housekeeping Task). PHT includes the second stage loader, the AX.25 protocol stack (QAX25), PHTX (the satellite specific housekeeping task), and two programs which provide a file system and user interface, MFILE and FTL0. The SCOS provides all the necessary functionality for managing and running software, memory and file system. In particular, the operating system activates the PHTX program on the following events: clock (every second), command from the ground, and input on a serial port. The flight software is designed to react to all of those events appropriately. When not running a specific task SCOS puts the flight computer into "sleep" mode. If activated by a clock the program verifies if telemetry or payload data need to be acquired.

The data bus connects the various subsystems, the embedded controller cards and the flight computer. The protocol used for communication between main flight computer and the embedded controllers is the so-called KISS protocol. It is typical for this kind of protocol that any transmission starts with characters C000 [hex], and ends with C0 [hex]. The software design used on Falconsat-1 is very user-friendly, and can be easily modified which provides for error correction capability even when the spacecraft is on orbit.

Communication Subsystem

The communications subsystem consists of a two-channel 9600 bps modem, two transmitters, two receivers, a receive antenna splitter, a transmit hybrid coupler, and a single ¼ wave whip antenna for receive and four turnstile antennas for transmit.

Each transmitter and each receiver is assigned a single frequency. The downlink frequencies are 400.475 MHz and 400.575 MHz, the up-link frequencies are 148.015 MHz and 148.030 MHz. Data rate for transmit and receive is 9600 bits per second.

Each transmitter requires a regulated voltage of 7.5 V DC. A voltage regulator is used to convert the power bus voltage to the voltage required by each communication component (See Table 4). Each receiver is wired directly to the unregulated power bus since they contain their own voltage regulators. The receivers can accept an input voltage range from 9 to 16 VDC. While only one transmitter will be operating at a time, both receivers will always be operating; therefore, the power required to operate both receivers will be 0.2W.

Components	Qty	Power (EACH)
Space Quest UHF FM Transmitter	2	17.29W (7.5V DC)
Space Quest VHF FM Receiver	2	100mW
7.5 V DC-DC Converter	1	90% eff.
Space Quest GMSK Modem Board	1	200mW
UHF Phasing Network w/ 4 Antennas	1	0mW
VHF Antenna	1	0mW

Table 4: Power requirements for Communications

The antennas are located such that they do not interfere with the separation of Falcon Sat-1 from the launch vehicle and other payloads on the mission. The transmit-hybrid coupler will be directly attached to the antennas. Both transmit and receive antennas are nearly omni-directional allowing efficient operation with the ground station in any

spacecraft attitude. A transmitting antenna angle of 45 degrees was selected to minimize solar array shading without sacrificing signal strength loss.

Signal modulation is achieved with Gaussian Minimum Shift Keying (GMSK), a type of Frequency Shift Keying (FSK) modulation which rounds off the carrier signal. There are a number of advantages associated with GMSK compared to FSK that made it attractive for FalconSat-1. GMSK has no side bands and is also an easier signal for the ground station to capture due to Doppler effects. Additionally, the GMSK signal has no discontinuities and minimizes out of band harmonics. The robustness and fade resistance of GMSK made it ideal for our long duration mission. Besides these advantages, GMSK has a signal to noise ratio 1 ½ dB better than FSK which made it the better choice. The modem which is being used on FalconSat-1 contains two independent full duplex modems on a single, multi-layered circuit board. The two independent modems (see fig. 14) allow for two transmitters and receivers to be connected simultaneously.

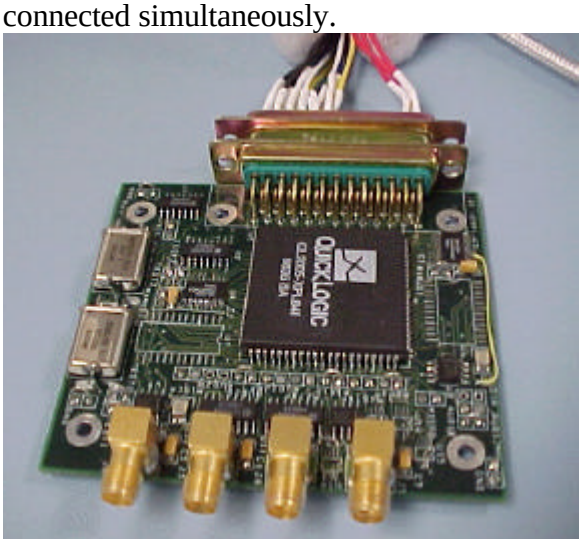

Figure 14: Modem

The calculations of the up-link and downlink budgets were performed and presented in appendix E.

Attitude Determination and Control

The attitude determination and control subsystem maintains, controls, and monitors the attitude of the spacecraft. According to the payload requirements the attitude determination and control subsystem must be capable of maintaining the spacecraft within ±25 degrees of nadir pointing. In order to collect useful science data, the subsystem must maintain a spin rate of less than 10 RPM. The attitude data is used to provide reference points for the collected CHAWS-LD data.

The major components of ADACS are a torque rod for active attitude control, a 3-axis magnetometer to provide attitude information, and hysteresis rods to provide the necessary damping. The launch vehicle will impart the initial spin on the spacecraft upon separation. ADACS will then use open loop control commanded by the mission control center. Using magnetometer data contained in the telemetry stream, the satellite can be commanded to operate the torque rod as necessary to align itself with the earth's magnetic field lines. The operation of the torque rod must also be de-conflicted with CHAWS-LD data collection times due to the effects of the magnetic field that is created. Due to the shape of the earth's field lines, the spacecraft will execute a "flip," turning 180° over each crossing of the equator, when the torque rod is operating on a 100% duty cycle as shown in figure 15.

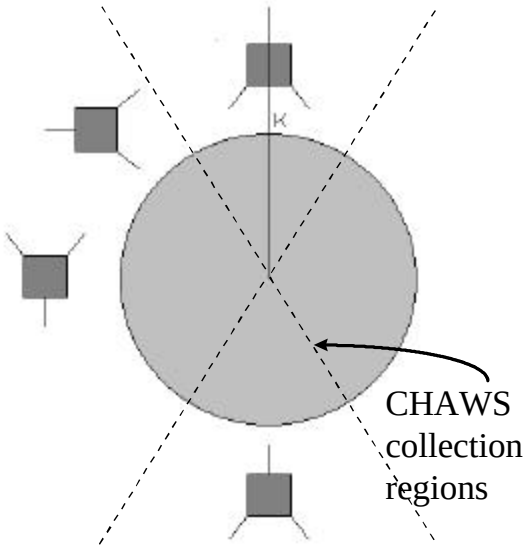

Figure 15: ADACS Torque Rod Duty Cycle Illustration

The torque rod has a dipole of 85 Amp-m^2, and is 15.1 inches tall and 2 inches in diameter. It is mounted between the framestack assembly and the outer honeycomb panels. The hysteresis rods are mounted in the EPS tray and will provide damping for the spacecraft. The magnetometer, requiring 15-34 VDC at less than 25mA to power it, weighs 100 grams and is 3.51 cm x 3.23 cm x 8.26 cm. In addition, nylon solar radiation paddles will be used to maintain the initial spin rate. There will be four paddles affixed to the corners of the satellite. Each will be 10” x 3” x 1/16”. One side of each of the paddles will be painted white while the other side will be painted black to maximize the effects of solar pressure.

Ground Segment

Spacecraft Operations and Control Center

The ground station is designed to transmit commands to Falconsat-1 and to receive information according to a specified communication schedule. The received data are interpreted, displayed and archived. All data is transferred at a rate of 9600 baud. The ground station transmitter transmits at 148.015 and 148.030 MHz. The received information is stored and distributed to the scientists who developed the Falconsat payload.

The main elements as shown in Fig. 19 of the ground station are receive-antennas, a low noise amplifier, a spectrum analyzer, the receiver, a terminal node controller, the command and data computer and an archive computer on the receiving signal path. An oscilloscope, a transceiver, a high power amplifier and transmit-antennas which are necessary to transmit signals to the spacecraft provide the up-link signal path and a tracking computer is used for spacecraft tracking.

The receive antennas are 77cm Yagi with 25 degrees beamwidth and 15.2 dB gain and operate in a frequency range of 420-440 MHz. A low-noise amplifier amplifies the received signal. The device has a bandwidth of 40 MHz, a noise figure of 0.60 dB and a gain of 16dB. A spectrum analyzer allows operators to analyze the incoming signal and to verify the signal-to noise ratio. The receiver, an Icom 8500 has a large frequency range and its spurious image rejection ratio is 50 dB. The receiver in the downlink path is followed by a terminal node controller (TNC), which removes the carrier frequency from the incoming signal. The signal is then transferred to the command & data computer (CMD), which displays and processes the spacecraft's telemetry data and supports the CHAWS-LD experiment. An archive computer is used to display telemetry and for backup storage.

The CMD computer sends commands to the spacecraft to get the health and status data and to download the payload (CHAWS-LD)

data. It is also used for uploading the software to the spacecraft computer and to perform diagnostic checks on the flight computer.

A terminal node controller packetizes the information to be sent to the spacecraft and a Kenwood TS-790A transceiver transmits the signal to the spacecraft. The necessary power is obtained through amplification with a high power amplifier that has 160 W output power at 10 W input power. The transmit-antenna is a 2 m Yagi with 13 dB gain and 34 degree beamwidth.

For tracking purposes an additional computer is used with a software package that allows automated control of the antenna array.

Launch Segment

FalconSat-1 will be launched on a converted Minuteman II missile (Minotaur) as the primary payload no earlier than 15 September 1999. The launch vehicle is being developed for the Air Force Space and Missile systems Center (SMC) by Orbital Sciences Corporation. It is a four-stage launch vehicle with the first and the second stage being Minuteman II stages. The two upper states come from Orbital's Pegasus launcher. The configuration of the launch vehicle is shown below in figure 16.

MISSION OPERATIONS

Payload Operations

The CHAWS-LD experiment uses voltage and current sensors to acquire the information about the charging of the spacecraft. When acquiring data, these data measurements are made at a rate of 10 Hz or 5 Hz, as required. A series of measurements is taken over the course of one or more orbits and provided to the experimenter. CHAWS-LD data sets will be recorded in the onboard memory of the Falconsat-1 computer for transmission to ground.

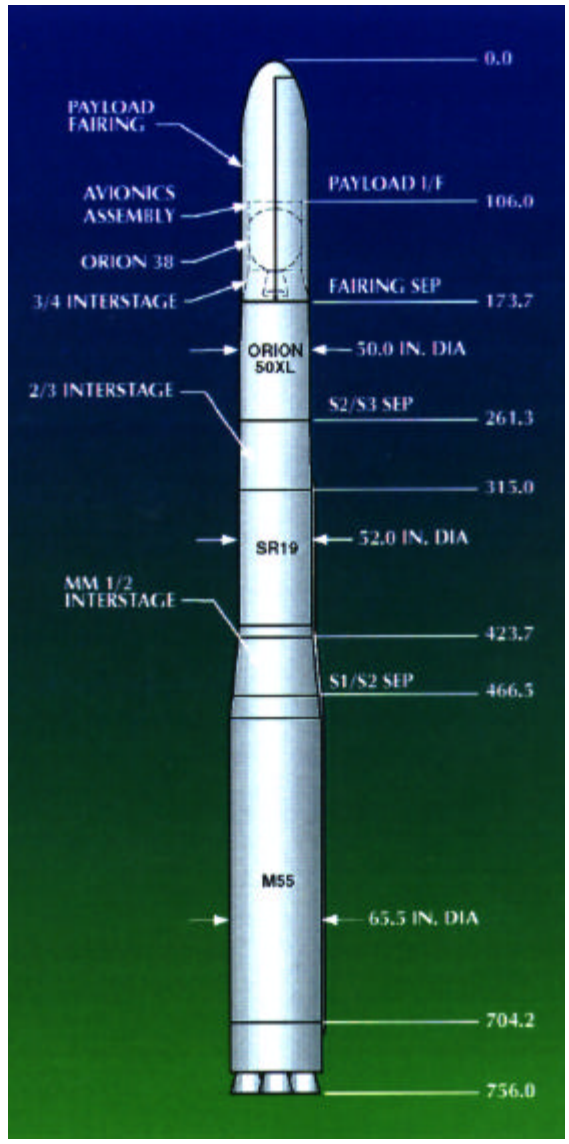

Figure 16: Minotaur Launch Vehicle

Two modes of sampling are necessary which must be changeable on command at least once per day. It does not matter where within the orbit the data collection mode changes. The software for both modes includes scheduling tables which tell the spacecraft how to interleave the sampling

CHAWS-LD for data with operation of the electromagnets used for attitude control. CHAWS-LD will not be powered continuously. Only the data polling will be scheduled.

The required modes of operation are summarized in table 5:

Mode	Operations
Nominal Mode (Mode 1), 90% of operations	Data collected when satellite's within ±25° latitude of either geographic pole. CHAWS-LD will ideally be sampled continuously.
Full Orbit Mode (Mode 2), 10% of operations	CHAWS-LD sampled in 1° intervals throughout the orbit. Sampling interval is 5 seconds long at rate of 5Hz.

Table 5: Modes of Operation

In both modes, similar data products are required. This includes sets of data separated by orbit or by day. The orbital elements, provided by NORAD must be given at least once per each orbit's worth of data. Also, within each data set, an appropriate time stamp must precede each set of 18 bytes representing the twelve different sensor measurements.

End-to End Information System

The mission control center will be responsible for establishing operating regimes for the satellite while on orbit. As CHAWS-LD data is gathered, it will eventually transferred to the end user as shown in figure 17 and the ensuing description.

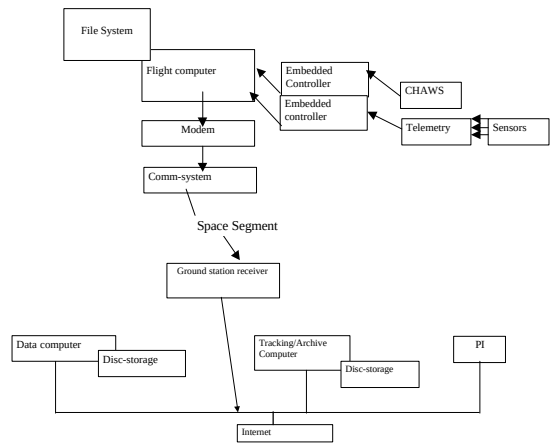

Figure 17: End-to-end data flow diagram

CHAWS-LD provides an analog voltage signal that corresponds to the charging level of the sensors and sends it to the embedded controller. The embedded controller converts the analog signal into a digital data stream, which is sent to the flight computer. The second embedded controller transfers the telemetry data to the flight computer. Telemetry and payload data are stored in the file system. When the spacecraft passes over the mission control center the data are downloaded upon request from the ground station. This process includes the transfer of the digital data to the modem, which packetizes the data stream and sends it to the transmitter. At the ground station the data are received, amplified, demodulated and stored in the data computer. A separate computer is used for spacecraft tracking. All computers are connected to the Internet which allows the principle investigator to access the data whenever necessary.

Spacecraft Bus Operations

We distinguish three modes of operations: start-up, normal mode and safe mode. On start-up operations, the torque rods will be on for the full orbit until the data collection cycle begins to control the attitude of the spacecraft. The magnetometer will be turned on to determine the attitude and send it as

telemetry data to the ground station. During normal operations the magnetic torque rods will begin a duty cycle in the Polar Regions. The Polar Regions are within 30 degrees of each pole. During the off-cycle, the CHAWS data will be collected.

In the case the spacecraft experiences a loss of attitude, the magnetic torque rod will be turned on for the entire orbit until the error is corrected. If power needs to be conserved and the system is turned off, it will take several orbits before the duty cycles can be resumed in order to meet data taking requirements.

If overheating occurs subsystems or components can be shut down. In that case the spacecraft will go into Safe Mode. The spacecraft also automatically goes into Safe Mode if the battery voltage drops below a defined value. In that case the computer starts to shut down the systems in the following sequence: Payload-ADACS-Embedded Controllers.

Organization and Team Responsibilities

FalconSat-1 is being constructed by a team of both cadets and faculty mentors. The organizational chart below shows the breakdown, by subsystem, of cadets and their respective mentors. The goal in creating functional groups, as well as including students from multiple academic majors, is to increase the level of understanding of the systems nature of satellite design. Besides applying technical knowledge, both cadets and mentors are forced to increase their communication skills to insure that the program moves forward. The entire team meets formally every other day during a 2 hour class period; however, a large amount of work takes place out of the formal class period.

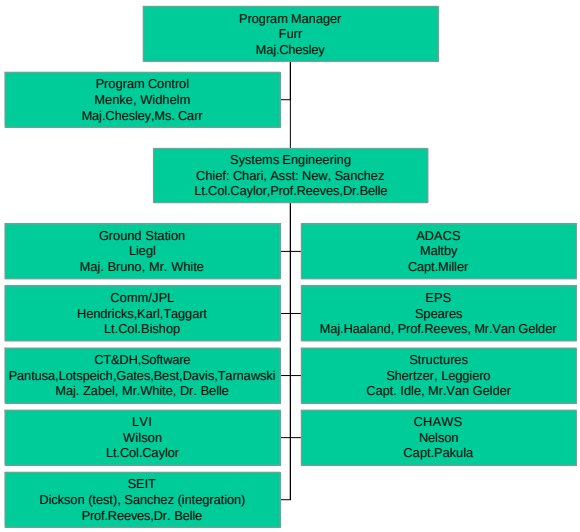

Fig. 18: SmallSat organization

APPENDIX A: Classical Orbital Elements (samples from first day of orbit)

Time (UTCG)	Smi-major Axis (km)	Eccentricity	Inclination (deg)	RAAN (deg)	Arg of Perigee (deg)	True Anomaly (deg)	Mean Anomaly (deg)
15 Sep 1999 00:00:00.00	7128.137000	0.000000	100.000	265.000	0.000	0.000	0.000
15 Sep 1999 00:10:00.00	7121.854355	0.000933	100.004	265.002	170.021	226.044	226.122
15 Sep 1999 00:20:00.00	7111.859288	0.001727	100.012	265.013	228.938	203.197	203.275
15 Sep 1999 00:30:00.00	7111.916398	0.001310	100.012	265.028	280.137	188.084	188.105
15 Sep 1999 00:40:00.00	7121.944819	0.000174	100.004	265.039	90.742	53.588	53.572
15 Sep 1999 00:50:00.00	7128.016044	0.000891	100.000	265.041	179.732	0.724	0.723
15 Sep 1999 07:10:00.00	7112.684218	0.001179	100.014	265.355	285.755	186.126	186.140
15 Sep 1999 07:20:00.00	7123.105414	0.000297	100.007	265.364	120.466	27.527	27.511
15 Sep 1999 07:30:00.00	7128.029841	0.000908	100.003	265.366	186.072	358.049	358.052
15 Sep 1999 07:40:00.00	7120.589835	0.000139	100.008	265.368	339.766	240.480	240.494
15 Sep 1999 07:50:00.00	7111.125504	0.001440	100.015	265.380	86.311	170.042	170.013
15 Sep 1999 08:00:00.00	7112.676772	0.001685	100.014	265.395	137.868	154.569	154.486
15 Sep 1999 08:10:00.00	7123.234041	0.000798	100.006	265.405	199.563	128.943	128.872
15 Sep 1999 08:20:00.00	7128.091822	0.000107	100.003	265.406	94.051	270.520	270.533
15 Sep 1999 08:30:00.00	7120.501450	0.001061	100.008	265.409	177.594	223.043	223.127
15 Sep 1999 08:40:00.00	7111.084831	0.001752	100.015	265.421	235.199	201.511	201.584
15 Sep 1999 08:50:00.00	7112.915694	0.001133	100.013	265.436	286.234	186.565	186.580
15 Sep 1999 09:00:00.00	7123.336392	0.000339	100.006	265.446	126.572	22.341	22.326

APPENDIX B:
Sample Energy Budget Analysis

This analysis examines the ability of the spacecraft power system to power the subsystems as well as to recharge the batteries. The table shown assumes an 80% efficient power conversion unit (PCU) and 67% efficient voltage converters. The different cases represent variations to the modes of operation and different lighting situations. The bottom line is that until Feb 5th, 2000 (anticipated) for every 3 orbits where there are ground station passes, it will require 1.5 orbits for the batteries to recharge.

This table is just one example of the program's effort to model a number of different scenarios assuming varying efficiency values, eclipse times, and other contingencies.

			Case 1	Case 2	Case 3	Case 4
Tray	**Component**	**Power (W)**	Mode 0 + Tx On No Eclipse-5 Feb '00	Mode 0 Everything on except Tx No Eclipse-5 Feb '00	Mode 0 While IN ECLIPSE Worst in Mar '01 (35 min)	Mode 0+Tx On During Lighted part of partially eclipted orbit
Comm 1						
	Rx 0	0.1	0.1	0.1	0.1	0.1
	Rx 1	0.1	0.1	0.1	0.1	0.1
ADACS						
	ECC 0	1.5	1.5	1.5	1.5	1.5
	TCE 0	0.5	0.5	0.5	0.5	0.5
	5V Conv	1	1	1	1	1
	15V Conv	0.65	0.65	0.65	0.65	0.65
	Magnetometer	0.375	0.375	0.375	0.375	0.375
	Torque Rod	3	3	3	3	3
	CHAWS	0.896	0.896	0.896	0.896	0.896
CT&DH						
	Flt.Comp	0.2	0.2	0.2	0.2	0.2
	Modem	0.4	0.4	0.4	0.4	0.4
	3V Conv	0.2	0.2	0.2	0.2	0.2
Battery			Supply	Charging	Supply	Supply
	Battery	??	23.32	6.595555556	11.921	23.32
EPS				Requires 1.5 orbits		
	PCU	??	9.464	4.629138889	0	9.464
	ECC 1	1.5	1.5	1.5	1.5	1.5
	TCE 1	0.5	0.5	0.5	0.5	0.5
	5V Conv	1	1	1	1	1
	7.5V Conv	8.645	8.645	Not on	Not on	8.645
	7.5V Conv	8.645	Not on	Not on	Not on	Not on
Comm 2						
	Tx 0	17.29	17.29	Not on	Not on	17.29
	Tx 1	17.29	Not on	Not on	Not on	Not on
		Total------>	**47.32**	**23.14569444**	**11.921**	**47.32**
		SA Cap.	24	24	0	24
		Batt.Drain	23.32	-0.854305556	11.921	23.32
	Energy Drain on Batts		16.324	**Requires 1.5 orbits for every 3 Tx pass orbits to recharge**	4.214494949	16.324

Appendix C: Communications Link Budgets

Link Budget Elements: Up-link (10 degrees elevation)

Link Element	**148 MHz**
Ground Transmitter Power Output (+ 30 W Amp)	14.8 dBW
Ground Antenna Gain	13.0 dBiC
Ground Station Misc. Loss	-2.7 dB
Ground EIRP	25.1 dBW
Path Loss (2155km @ 148 MHz)	-142.6 dB
Ionospheric/ Atmos. Losses	-1.5 dB
Polarization Loss	-3.0 dB
Isotropic Signal Level @ Ground Station	-122.0 dBW
Satellite Antenna Gain [G]	0.0 dBiL
Satellite Total System Noise Temperature [T]	30.0 dBK
Satellite Figure of Merit [G/T]	-30.0 dB/K
Boltzmann's Constant [K]	-228.6 dBW/K*Hz
Satellite Cable Losses (included in Antenna Gain)	-1.0 dB
Downlink Data Rate (= 9,600 bps)	39.8 dBHz
Satellite Signal Power	-122.0 dBW
Noise Power	-158.8 dBW
S/N Ratio	36.8 dB
Implementation Loss	2.0 dB
Required S/N for 10^{-4} B.E.R.	12.5 dB
Margin	**22.3 dB**

Receiver Noise Temperature	
Receiver front end 2 dB noise factor	169.6 K
Earth temperature	290.0 K
Antenna noise	540.4 K
Total	**1000.0 K**

Link Budget Elements: Downlink

Link Element	**400 MHz**
Transmitter Power Output (7 W)	8.5 dBW
S/C Losses	-1.0 dB
S/C Antenna Gain	0.0 dB
S/C EIRP	7.5 dBW
Path Loss (2155km @ 400 MHz)	-151.2 dB
Ionospheric/ Atmos. Losses	-0.9 dB
Ground Station Pointing Losses	-1.0 dB
Polarization Loss	-3.0 dB
Isotropic Signal Level @ Ground Station	-147.6 dBW
Ground Station Antenna Gain [G]	15.2 dBiL
Ground Station Total System Noise Temp. [T]	27.0 dBK
Ground Station Figure of Merit [G/T]	-11.8 dB/K
Boltzmann's Constant [K]	-228.6 dBW/K*Hz
Ground Station Cable and Misc. Loss	-1.0 dB
Downlink Data Rate (= 9,600 bps)	39.8 dBHz
Ground Station Received Power	-133.4 dBW
Noise Power	-161.8 dBW
S/N Ratio	22.4 dB
Implementation Loss	1.0 dB
Required S/N for 10^{-5} B.E.R.	13.8.0 dB
Margin	**13.6 dB**

System Noise Temperature	
Receiver LNA 0.6dB noise figure K	43.0 K
Receiver noise 0.5 μV sensitivity –16dBLNA gain	75.8 K
Galactic noise	46.0 K
Antenna noise	335.0 K
Total	**499.7 K**