Progress Toward Hydrogen Peroxide Micropropulsion

John C. Whitehead
Michael D. Dittman
Arno G. Ledebuhr
Lawrence Livermore National Laboratory
L-43, PO Box 808
Livermore, CA 94551
925-423-4847
jcw@llnl.gov

Abstract. A new self-pressurizing propulsion system has liquid thrusters and gas jet attitude control without heavy gas storage vessels. A pump boosts the pressure of a small fraction of the hydrogen peroxide, so that reacted propellant can controllably pressurize its own source tank. The warm decomposition gas also powers the pump and is supplied to the attitude control jets. The system has been incorporated into a prototype microsatellite for terrestrial maneuvering tests. Additional progress includes preliminary testing of a bipropellant thruster, and storage of unstabilized hydrogen peroxide in small sealed tanks.

Introduction

A previous paper advocated high test hydrogen peroxide (HTP) for miniature space propulsion.[1] It noted that the smallest satellites have used cold gas propellant. The philosophy presented was that HTP offers more maneuvering capability than nitrogen, at a potentially lower cost than hydrazine. The greatly reduced toxicity of HTP can accelerate development testing of new systems.

Liquid thrusters sized for attitude control on a tiny scale were noted to be unavailable. Scaling equations showed that smaller satellites require a greater propellant fraction or smaller impulse bits for 3-axis control. Given these constraints, it makes sense to carry liquid propellant and react it in a gas generator to feed gas jets. This scheme is synergistic with using reacted propellant to pressurize its own tank, thereby avoiding large and heavy gas vessels.

Ongoing work has embodied these principles. A self-pressurizing HTP system has been completed and used in maneuvering tests of a 25 kg microsatellite prototype. Efforts continue toward flightworthiness and additional performance advances.

Pumped Self-Pressurization

Fluid flow around a complete circuit to its point of origin requires a pressure boost somewhere along the path. As shown in Figure 1A, a differential-area piston tank was implemented for initial testing.[1] This imposes significant constraints on tank design and system packaging. An alternative is to use a gas-driven boost pump based on the same differential area principle, as shown in Figure 1B.

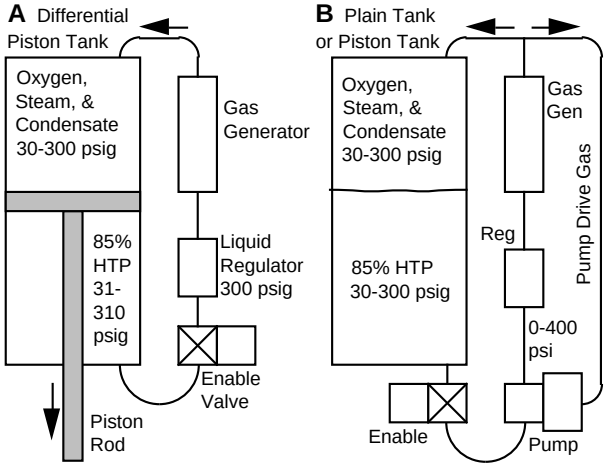

Figure 1. Options for self-pressurizing liquid tanks.

Both concepts are decades old and can be used with different propellants. For example, the latter was tested with hydrazine in the mid 1980's using a gas driven intensifier (GDI) made by Primex Aerospace Company.[2]

While not shown in Figure 1, the tank may directly feed thrusters after system pressurization. Similarly, a branch on a warm gas line would feed tiny control jets. Considering the single source reservoir, there is no need to apportion propellant between translational maneuvers and rotational control in advance.

Boost Pump

The pump shown in Figure 2 was designed at LLNL during 1998 specifically for HTP. It worked the first time it was tested, and ultimately proved to be reliable. The

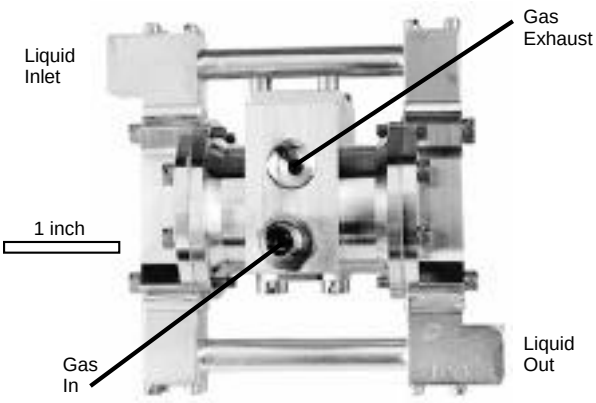

Figure 2. The 220 gram aluminum HTP pump.

design follows a series of prototypes gradually refined during 1994-1997. In the selected configuration, the central gas valving is flanked by a pair of power chambers. The liquid pumping assemblies at the ends have built-in check valves. Double-acting operation permits continuous flow for a steady system pressure. Aluminum construction keeps weight and cost down while aiding liquid cooling of the soft warm gas seals. A related key feature is that gas flow ceases when liquid demand stops at pressure.

Figure 3 shows the powerhead subassembly, along with a set of spare parts (fasteners and seals omitted). Each power chamber has a 3-way intake-exhaust valve, pneumatically switched by the main pistons. The springless powerhead avoids force limits which would narrow the operating pressure range. The upper limit is structural, and the lower limit depends on valve friction. Many system restarts can be reliably had, from tank pressures of just tens of psi. In contrast, prior designs for self-pressurizing propulsion had pump springs and single-use solid propellant starter cartridges.

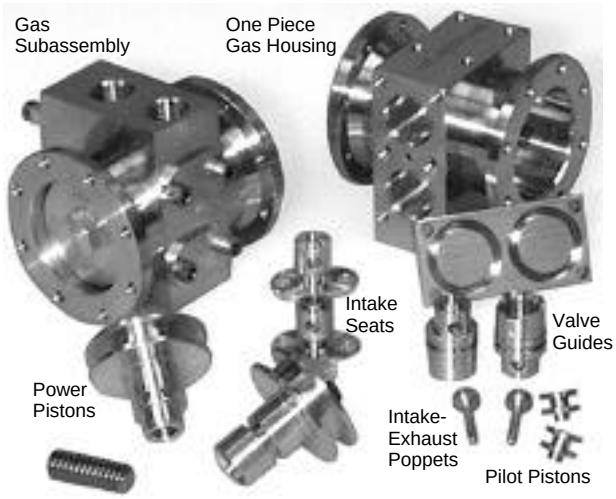

Figure 3. The gas housing and valves consist of 13 parts.

In the photograph, the inch-diameter power pistons are at the lower left. The four smallest items shown are the moving valve parts. Each intake-exhaust poppet is normally opened by supply pressure. However, pilot pressure pushes on the valve stem to close the intake and vent the power chamber. This arrangement permits the pilot signal to simply be the opposite cylinder's state of pressurization. Interrupting the pilot signal near the end of each power stroke ensures automatic oscillation at a frequency proportional to liquid flow.

Regarding the liquid pumping heads, a primary requirement was to ensure they would operate at very low flow over the entire pressure range, even with gas bubbles present. Therefore, unswept volume was minimized. Also, the check valves were given light springs and soft seals to virtually eliminate reverse flow losses.

Note in Figure 2 that sizeable discharge and suction manifolds are needed. The extra mass is not detrimental for a self-pressurizing boost pump. However, this configuration may not be preferred for a high flow-to-weight ratio. For example, propellant is pumped directly to thrust chambers in a pump fed rocket engine. A central liquid manifold surrounded by power chambers joined by gas plumbing is appropriate for this latter application.[3]

Breadboard System Test

Given a working pump tested with air, the next step was self-pressurizing operation of a hydrogen peroxide tank. In Figure 4, the system components were mounted on a 2 liter aluminum piston tank. A commercial adjustable pressure regulator was used, along with a gas generator manufactured by General Kinetics, LLC.

Assembling and testing this system was a one-week benchtop effort for 1-2 people. This may not have been possible with highly toxic or volatile propellant. Aside from room temperature proof-pressure tests, it was not necessary to subject individual components to predicted operating conditions, or to perform rigorous system leak checks. A polycarbonate enclosure was sufficient to protect personnel from potential test failures. Ventilation combined with the low volatility of HTP would prevent a breathing hazard in the event of a fluid release.

A gas solenoid valve at the tank pressurant port was used to introduce compressed air at a fraction of operating pressure. Also included in Figure 4 but not shown in Figure 1B is a check valve for the warm tank pressurant. This prevented the initial air charge from immediately actuating the dry pump.

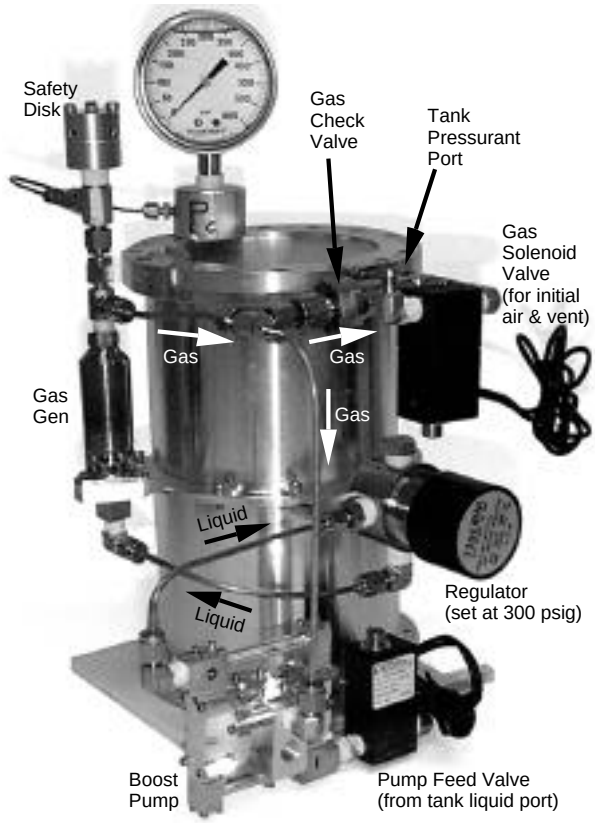

Figure 4. The breadboard self-pressurizing HTP system.

In September 1998, the breadboard system pressurized itself on the first try and subsequently without failure. Six successful system starts were achieved from 50 psig down to 15 (lowest tried). This simply required actuating the pump feed valve. Low pressure HTP then flowed through the pump, regulator, and gas generator. As soon as the resulting warm gas reached the pump, the latter's liquid discharge was boosted to a slightly higher pressure. This positive feedback loop amplified pressure while sending steam and oxygen to the tank.

The pump cycling rate was limited by fluid passageway sizing. It averaged approximately 1 Hz during system startup. An initially lower frequency rose along with pressure, then it gradually slowed to a stop while leveling off at the regulated pressure.

The hysteresis band was approximately 10 psi wide. After the regulator shut, warm gas pressure reached 310 psi as the propellant remaining in the catalyst bed reacted. Over roughly 10 seconds, it then fell back to 300 psi as the system cooled and remaining steam condensed without further liquid HTP flow. In one test series, an additional gauge on the tank ullage indicated a 5 psi reduction there. This most likely corresponded to the cracking pressure of the warm gas check valve.

Thermal

Weakening of aluminum tank walls above 400 F is an obvious concern. At a comfortable 300 F, Al-6061-T6 retains 85-90% of its room temperature strength, depending on duration. Fluoroelastomer seals also have a practical limit in the 400-600 F range. Candidate polymers for tank liners are being evaluated as well. Liquid HTP released above its atmospheric boiling point (282 F for 85% concentration) will partly become vapor. Sufficiently concentrated HTP vapor detonates if ignited.

In the breadboard tests, the tank's upper end (near the pressurant port) typically reached 250 F upon full pressurization. Additional heat transfer from the steam raised this as high as 290 F. These measurements indicate acceptable avoidance of all the above limits.

Note that this test series was thermally stringent. In particular, the 10% propellant load had little thermal mass to receive heat, compared to a full tank. Simultaneously the 90% ullage volume resulted in a high energy input. It filled in 10-30 s (depending on start pressure), with little time for heat dissipation. Thermal stratification in the vertically-oriented ullage may have reduced heat transfer to the liquid, thereby maximizing metal temperatures.

It is unlikely that flight systems operating in vacuum will result in vastly higher temperatures, since observed cooling rates in the lab were many times slower than heating rates. That is, convection and conduction to the lab environment must have been minor effects.

The pump gas housing typically operated near 175 F. System shutdown by closing the pump feed valve resulted in a few seconds of rapid dry pump cycling, a worse thermal condition. During one of these events, the same thermocouple indicated a peak of 245 F.

Based on the number of pump cycles and its ~5 cc volume displacement, roughly 100 grams of HTP had flowed into the 2-liter tank ullage at 300 psi. Considering both peak temperatures and the calculated volume of the product oxygen, the observations are consistent with nearly complete condensation of steam in the tank pressurant. The volume of condensate water drained from the tank pressurant port verified this.

In general, tank temperatures resulting from warm gas pressurization in vacuum can be predicted by energy balance calculations. The Appendix outlines such calculations for HTP systems.

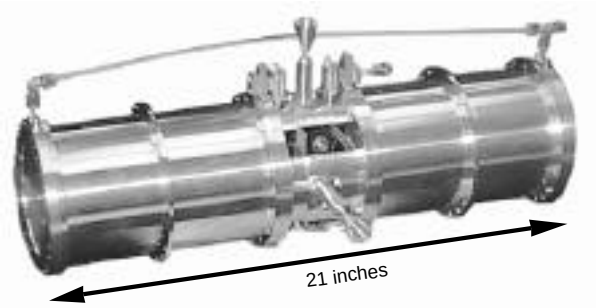

Figure 5. Multi-axis HTP maneuvering system.

Integrated Maneuvering System

A prototype maneuvering system sized for tiny satellites was initially tested in 1997. Figure 5 shows the custom-designed liquid hardware. A pair of piston tanks with connecting structure permits point c.g. control while also serving as the structural backbone for mounting other subsystems. The translational thrust is in the range 3-5 lb and total HTP capacity is 5 kg.

In Figure 5, there is no pressurization system. Initial tests in 1997 used facility pressurization into the long horizontal tube. Tank outlet valves and thruster valves are all located inside the center structure. HTP fill and drain valves are above the tanks at the inboard ends. The total mass of the assembly pictured is under 5 kg.

As indicated in Figure 6, an onboard nitrogen pressurization system was installed for tests in 1998.[4] The four carbon fiber composite overwrapped pressure vessels (COPV's) alone massed 2.4 kg, or half that of the liquid subsystem. Their mounting brackets, the high pressure fill valve, and the gas regulator also added weight. All these items were subsequently removed for the self-pressurizing upgrade.

Most of the components in Figure 4 were transferred onto the liquid maneuvering core. The pressurization hardware and mounting brackets weighed as little as two of the four nitrogen tanks. This could be halved again by eliminating heavy fittings and building a lightweight regulator.

Figure 7 is a line drawing of the assembled system, which may be directly compared to Figure 6. Tests were planned for horizontal thrusting only, so the boost pump was connected in place of the upper thruster. The latter's valve remained and was actuated to initiate self-pressurization. The pump orientation causes any rising bubbles in the liquid manifolds to move upstream instead of naturally escaping. Thus, potential problems with gas pockets in microgravity would become evident during ground testing.

Other parts were located for mass balancing, and to confine the hottest tubing runs in a small area around the aft tank. A normally open vent valve was included on the warm gas circuit so the system would safely shut down upon loss of electrical power during ground testing. The initial low-pressure inert gas was also introduced there. Figure 7 represents a 9.85 kg dry propulsion system. This included over 2 kg of heavyweight attitude jets and 1.6 kg of stainless steel fittings, so at least 3 kg could be trimmed.

In order to meet a programmatic milestone, the assembled system was successfully tested on September 30 1998, before the end of the fiscal year. The only glitch was a corroded check valve in the pump, which had resulted from inadvertent wet (water) storage for 9 days. After 3 successful tests, the propulsion system was declared ready for integration into a microsatellite technology testbed.

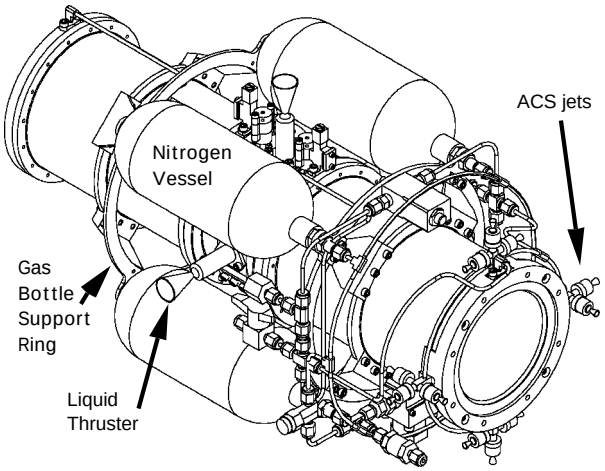

Figure 6. Nitrogen bottles are heavy and bulky.

Self-Pressurizing Upgrade

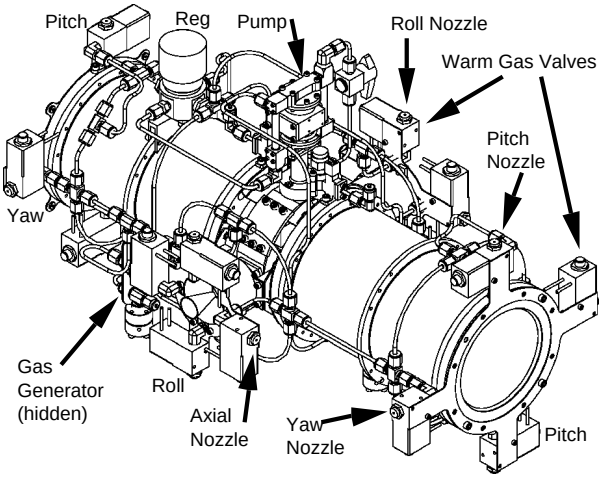

Figure 7. Complete self-pressurizing maneuvering system.

Heavyweight Attitude Jets

The miniature jets indicated in Figure 6 were manufactured by Moog Inc. specifically for cold gas operation. Not only do they incorporate low temperature materials, but axial flow through the solenoid is not a good idea for hot gas. Instead, available valves having high temperature elastomer seal pucks were fitted with conical nozzles. Based on a supersonic flow calculation, pitch and yaw jets for example were sized for 0.51 lb thrust at 300 psi. Multiplying pressure by throat area yielded a rough estimate of 0.38 lb.

Four sets of 4 warm gas jets were used, most of which can be seen in Figures 7 and 8. They are intended to be used in pairs. Those on the ends of the tanks provide pitch and yaw couples, while vertically-oriented pairs near the center of the vehicle similarly deliver pure roll torques. The remaining four near the center of the vehicle (2 on each side) point forward and aft for fine axial maneuvering thrust. In addition, pairs of pitch and yaw thrusters may be selected to obtain translational forces along the two transverse axes.

Thus the set of 16 warm gas jets can provide independent fine control of both translational position and angular orientation for a microsatellite. A particular interest for the present work is the capability to perform close proximity operations near other satellites, such as inspection and possibly docking.

Microsat Maneuvering Tests

A key element of LLNL's MicroSat Technologies Program is to develop user-friendly test capability for 3-D maneuvering using actual "hot-fire" propulsion operation. To date, 5-d.o.f. operation has been demonstrated with nitrogen propulsion. This uses low-friction air bearings on all axes except vertical translation.[4] However, it has not yet been practical to construct an air table large enough for the greater distances of interest (e.g. 30-100 m). Therefore, the HTP propelled system has been tested with 4 d.o.f. on an outdoor linear air track which is 40 m long.

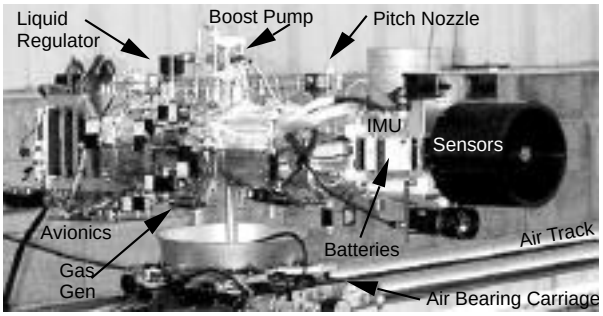

Figure 8. Microsat prototype set up for 4-d.o.f. operation.

Several generations of prototype microsatellites were previously tested with varying degrees of freedom. Technology upgrades have been made in all subsystems, including the dynamic air bearing (DAB) capability. During October 1998, the self-pressurizing HTP propulsion system became part of an autonomous micro-satellite technology testbed, dubbed the ETV-200 (ETV = Engineering Test Vehicle).

As shown in Figure 8, several imaging sensors and an inertial measurement unit (IMU) were attached to the forward tank, and the avionics were located at the opposite (left) end. Also visible in the photograph are the linear track and its air bearing carriage. For rotational freedom, the vertical post supports a hemispherical air bearing surface centered within the microsatellite test article. Pitch and roll are necessarily restricted, but yaw rotation is unlimited. Note that several RF links were used, to avoid umbilical forces and limits.

Test Highlights

To the best of the authors' knowledge, this was the first miniature vehicle, capable of multi-directional liquid propulsive maneuvering under onboard control, without any high pressure gas stored on board. A relatively fast-paced capability was demonstrated, owing in part to the use of minimally-toxic propellant. During all tests, people were permitted to observe at a 20 ft distance with safety glasses. Before the end of October 1998, translation over the length of the track was accomplished with the liquid catalytic thrusters, simultaneously with the first 3-axis attitude control using warm gas jets (4 d.o.f. operation).

One aspect of a fast-paced schedule was that corrosion protection was not at first implemented for the wetted parts. Instead, procedures for air drying were invoked for system storage in excess of a few days. Subsequent disassembly in December nevertheless confirmed surface corrosion, particularly at the steam ends of the tanks. White aluminum hydroxide apparently forms as a result of the hydroxide ions in water. Previously, the metal was left unprotected because the reaction does not readily occur with HTP (HOOH would have to generate an unlikely OH+ in order to make OH–).

All aluminum parts were anodized, including the tanks and pump. An undyed coating was chosen, because HTP bleaches dye from colored anodized aluminum. Propulsion reassembly in January was completed in one day by two people. The drying step was subsequently omitted. Maneuvering tests were performed in January and February. After 4 more months of wet storage and no refurbishment, the propulsion system operated in late June

1999 without incident. This includes successful pump operation after 6 months of wet storage (residual fluids, not full tanks). In all, the propulsion system pressurized itself approximately 35 times, from under 100 psi to 300 psi. The one notable startup failure was directly attributable to corrosion of the bare aluminum check valve early in the course of the project.

Translational Maneuvers

Two different catalytic liquid thrusters were used in the linear track tests with HTP. One is described in Reference 1, and a slightly higher thrust unit having traditional stainless steel construction was purchased from General Kinetics. Throughout the tests to date, informal comparative testing has been done with the LLNL thruster on one side of the vehicle, and the purchased thruster opposing it. Total propellant throughput has been about 5 kg for each engine, with no apparent catalyst degradation.

One test on an outdoor track was set up for translation only, with HTP consumed only by the catalytic thrusters. Specifically, the tank pressurant was nitrogen and rotational freedom was omitted. Thus engine performance could be determined from actual maneuvers. Recorded information included time, position over a 10 m range, and total propellant consumed. Pulsewidths of several seconds resulted in velocities up to 2 m/s. Calculations fit the data at thrust levels of 3 lb and 4 lb, with an average specific impulse between 95 and 100 s. These estimates agree with thrust stand measurements. Note that both thrust levels and Isp would increase by roughly 30% in vacuum.

Attitude Control Measurements

The steam and warm oxygen jets provided 3-axis control, despite uncertainty about the effects of 2-phase flow with condensing water. One test series with the ETV-200 (Figure 8) was done without translation, using a vertical air spindle replacing the hemispherical air bearing. Thus, only the yaw axis was active, and relatively precise performance measurements could be made. The onboard IMU recorded the angular velocity, including information to correct for the air spindle's low friction.

Separately, the rotary moment of inertia on the yaw axis was determined to be 2.4±0.1 kg-m^2 by mounting the vehicle on a rotary spring (0.76 N-m/r) and timing yaw oscillations. The apparatus was calibrated using a 20 kg uniform metal bar having a calculated 1.4 kg-m^2 m.o.i.

In one series, gradually increasing pulsewidths were commanded, starting at 2 ms. Hundreds of pulses of this duration failed to produce rotation, and the valves opened partially or erratically at 3 ms. However, a series of 4 ms pulses at 25% duty cycle produced slightly more angular acceleration than 10 ms pulses at 25%. All this suggests that the valves opened in just over 3 ms but took longer to close. This could be stated in terms of a minimum repeatable pulsewidth of about 4 ms. This is not a limit for warm gas attitude control, but rather a function of the valve technology used.

A key question regarding the potential for 2-phase flow is what effect does it have on Isp? It remains unclear how much steam is condensed in the nozzle throat, but certainly the warm gas attitude jet plumes are visible white puffs. A long duration run alternately used positive and negative yaw torques, so that a lot of propellant was consumed without undue angular velocities. Selected yaw jet pairs were actuated for 1.25 s pulses each 5 s, i.e. a 25% system duty cycle such that the vehicle spun up and stopped again within each 10 second period.

Over the 414 s test duration, the summed absolute value of angular velocity changes was 33 r/s, with friction and drag uncertainties under 2% of this. Multiplying by the rotary inertia, then dividing by the 0.26 m yaw jet moment arm, indicates a total delivered impulse of 305±13 N-s. Subtracting tank pressurant from the total HTP consumed, it was determined that 0.48 kg of decomposed 85% HTP flowed out through the yaw jets and pump exhaust. Dividing yields an effective warm gas jet exhaust velocity of 635±26 m/s, or Isp = 65±3 s at sea level. Delivered Isp in vacuum (including pump drive) would be near 85 s, which is superior to nitrogen propulsion.

The yaw thrust was also obtained from this experiment. Typical 1.25 s pulses delivered by two jets resulted in a 0.42 r/s angular velocity change, i.e. 0.34 r/s^2 angular acceleration. Calculated torque is 0.8±.03 N-m so each thruster delivered 1.54±.05 N (0.35±.01 lb). This is less than design calculations because system pressure was reduced by the gas demand. A tank transducer indicated 260-280 psig variations at the pulsing frequency. Also notable is that pressure drops through the gas feed tubing were not measured. Thus, the in-situ effective "chamber pressure" of the gas jets is not precisely known. In a different test, yaw jet thrust was determined to be 1.85 N.

Temperatures Measured

The avionics visible in Figure 8 included eight thermocouple channels dedicated to propulsion. Reaction temperatures in the gas generator are near 1100 F. As gas is conveyed to points of use, heat is lost through the 1/8 inch tubing walls. The pump is on one branch, 0.5 m from the gas generator. A gas immersion thermocouple is at 0.8

m, on the line to all the attitude jets. An instrumented yaw valve is 0.3 m beyond this. The immersion thermocouple typically reached 600 F when the system was operated for a minute or so. Tank and pump temperatures remained below 200 F during such tests.

Steady-state temperatures were reached during the 7-minute yaw test, which occurred outdoors on a hot dry summer day. Due to the high demand for steam and oxygen, its temperature exceeded 800 F for nearly 5 minutes. The yaw valve hovered near 325 F as the valve pulsed at its 12% duty cycle. At 0.5 Hz cycling, the pump gas valve housing gradually rose to 200 F. Simultaneously, the tank pressurant ends reached 275-295 F, just as in the breadboard self-pressurization test. The liquid ends of the tanks warmed up very slowly throughout the run, and never exceeded 200 F.

Bipropellant Thruster Development

Small satellites can be made far more maneuverable by using monopropellant hydrogen peroxide instead of cold gas propulsion. However, there is no comparison to liquid propellants widely used on spacecraft and launch vehicles. Therefore, the use of HTP as an oxidizer in bipropellant systems is of interest. The specific impulse can at least be doubled over that of HTP alone.

Many advocates have noted that HTP is an ideal coolant for thrust chambers, which has been shown on a scale as small as ~100 lb thrust.[5] Key properties are HTP's high heat capacity, low vapor pressure, and the high mixture ratio (ox/fuel) in bipropellant applications. Thus, there is plenty of cooling capacity available with no concern of boiling.

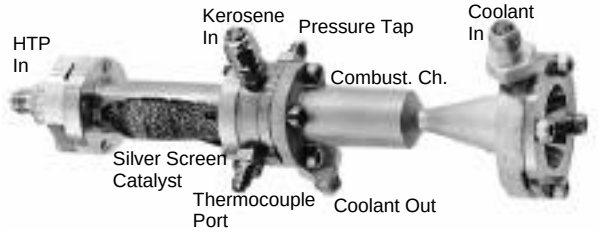

Figure 9. Prototype biprop thruster.

Figure 9 shows a prototype thruster intended to combust kerosene on contact with hot decomposed 85% HTP. It uses a 9/16 inch catalyst diameter, for a thrust goal in the 5-10 lb range. To date, it has undergone thermal tests of the cooling jacket during monopropellant operation. Water flowing at 13.3 cc/s had its temperature raised by 65 C, i.e. 3600 watts. While this may seem high, a key fact is that only 10% of the reaction heat was transferred into the coolant water. The combustion chamber inner wall temperature averaged just 5 C above the coolant, as calculated from the 0.5 mm wall thickness and the high heat conductivity of the copper alloy used.

While the preliminary results are encouraging, bipropellant operation will of course increase the heat load including the possibility of local hot spots. Assuming successful combustion is accomplished with acceptably low water temperatures, this surrogate coolant will finally be replaced by the HTP on its way to the injector.

Test results to date also include measuring the structural limit of brass operating near 1100 F. Weight was trimmed excessively prior to initial testing, as indicated by the "exploded view" of the catalyst chamber in Figure 9. Regrettably, an error in this regard was made in Reference 1. The strength quoted is that after heating then cooling, while the yield stress at temperature is much lower.

Long Term Sealed Storage of HTP

It is widely known that gradual decay during long term sealed storage remains the greatest weakness of HTP when satellite applications are contemplated. It must be stressed that the primary concern is pressure buildup, not the loss of propellant activity. For example, 1% decay hardly affects maneuvering performance but with a 20% ullage volume it increases tank pressure by 250 psi. The relevant factors include tank wall (or liner) material, the volume/surface ratio (tank size), temperature, propellant purity, tank ullage fraction, and the storage and consumption timeline.

The goal of ongoing work is to demonstrate 6 months to a year or more of sealed storage in tanks sized for very small spacecraft. This is sufficient to cover prelaunch timelines and on-orbit health checks of a satellite. If initial maneuvers consume most of the propellant early on, then the tank ullage volume increases greatly and subsequent pressure buildup occurs more slowly.

Recent results include carefully recorded decay data at 70±2 F for small vessels in the 0.2 to 2 liter range. The propellant is concentrated and distilled in accordance with Reference 1, which offers a repeatable purity standard. Tests shown here began with 85% HTP occupying 80% of the volume. Pressure and mass were recorded weekly.

The literature contains a wealth of data from material compatibility tests with HTP. Much of it is useful mainly for relative comparisons, e.g. many tests have been unsealed and were done at elevated temperatures to speed them up. Typically, results were normalized to fractional active oxygen loss (AOL) rates. Changes in AOL rates over time are not evident in historically tabulated data.

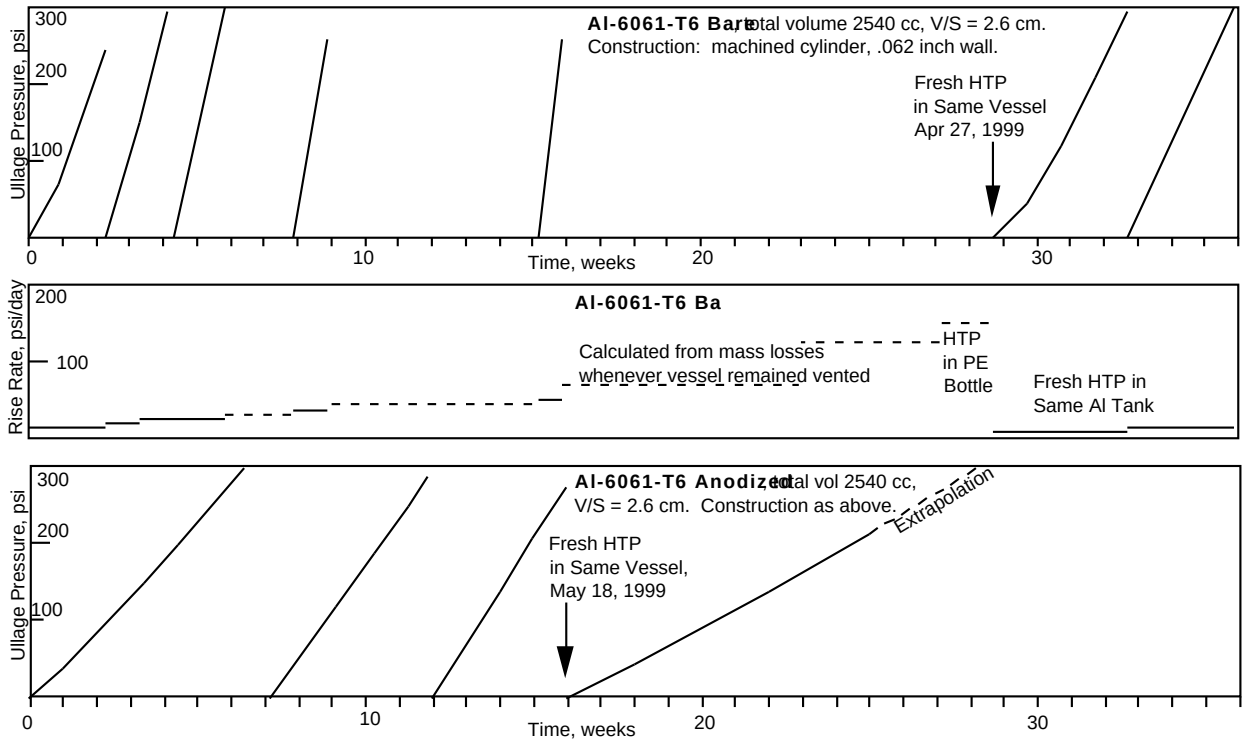

Figure 10. Pressure rises can vary widely when HTP is stored in sealed aluminum tanks.

In contrast, this paper is application oriented, so raw pressures are graphed. A new capability not available in the past is that electronic analytic balances are now accurate enough to observe gas leakage from sealed containers, as well as confirming mass changes upon deliberate venting. Cylinders were sealed by "Viton" o-rings, with negligible leakage verified in most cases. In keeping with the goal of avoiding hazardous materials, all parts were simply washed with detergent followed by demineralized water rinsing.

Aluminum Results

Figure 10 represents multiple tests in 2 aluminum tanks over much of a year. The actual test articles appear as in Figure 4, with a gauge connected but none of the other components (and no internal piston). The upper two graphs show that a bare aluminum tank initially reached its pressure limit in just 2 weeks, and that decay rates subsequently increased dramatically. The rate graph is included for this case only, because the pressure curves are too steep to permit reading their slopes. During much of the time, the vessel was left vented and the effective pressure rises were calculated from mass measurements.

Finally after 27 weeks, the propellant was transferred into a compatible polyethylene container, but the decay rate did not fall. HTP normally decays very slowly in polyethylene, indicating that the fluid had become contaminated by the aluminum tank. This was confirmed by a spectrochemical analysis for the elements known to be in this aluminum alloy. The HTP contained 9 ppm aluminum, 0.7 ppm magnesium, 0.2 ppm silicon, 11 ppb chromium, and 39 ppb copper. The latter two are known to cause HTP decay. While 39 parts per billion seems minimal, it is equivalent to a 0.16 mm cube of copper (a visible speck) dispersed throughout each liter of HTP.

The test vessel was later refilled with fresh HTP. The rightmost two traces in the upper graph indicate that to some extent, the bare aluminum surface had been cleansed. However the decay was still high and it continued to rise.

An identical tank was anodized along with the propulsion system parts as described earlier. Ideally, the aluminum oxide coating would prevent or reduce the dissolution of unwanted metals. The latter appears to be the case in the third graph. After 16 weeks of gradually accelerating decay, the pressure rise rate with fresh HTP was greatly reduced. The data suggest that anodized aluminum tanks might be appropriate for HTP if prelaunch timelines are short and propellant is consumed soon after reaching orbit. Storage times could be extended if prelaunch venting of a few grams of oxygen can be permitted, as was routine in the past for HTP systems. Anodized tanks can be lighter and simpler than plastic-lined tanks, and are also ideal for self-pressurizing systems, due to corrosion protection.

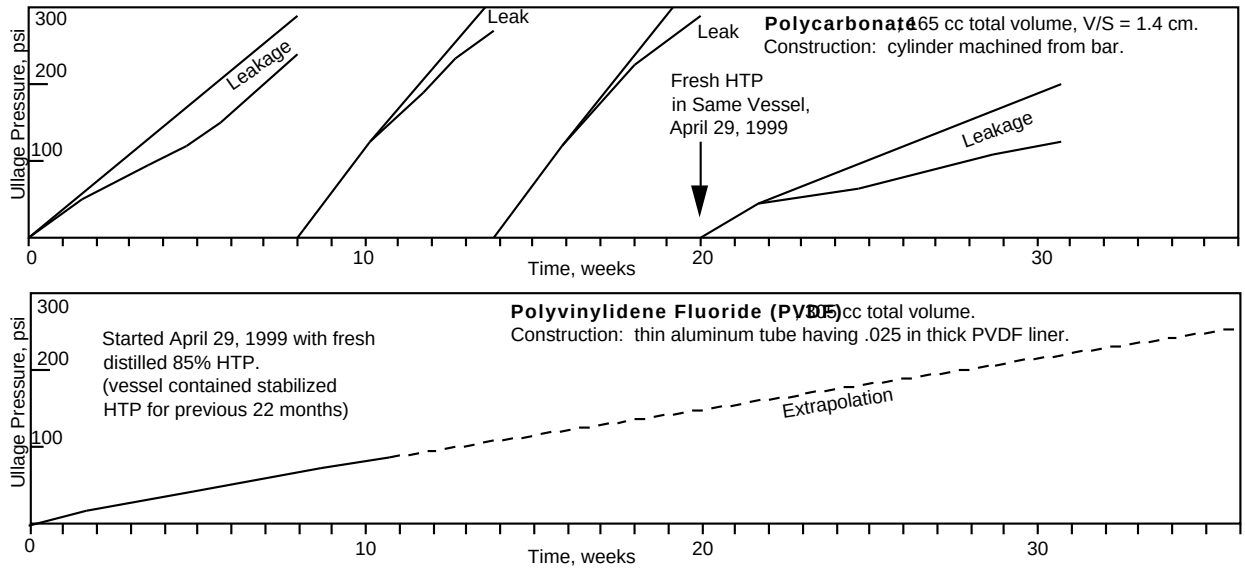

Figure 11. Some polymers offer the potential for many months of sealed HTP storage.

Plastic Results

The effects of exposing HTP to two different plastic tank walls are displayed in Figure 11. Note that these vessels are much smaller than those in Figure 10, with roughly half the volume/surface ratios. If the reaction occurs on the surface only, pressure rises shown in Figure 11 would be half as fast if scaled up to the larger size.

On the polycarbonate graph, the lower curves are actual pressure readings while the upper curves include the additional rise which would have occurred without external losses. While this is labeled as leakage, contributions from oxygen permeation have not been ruled out.

The best results were obtained with polyvinylidene fluoride (PVDF). Its molecular structure is effectively a hybrid between "Teflon" (PTFE) and polyethylene, both of which have similarly excellent HTP compatibility. However, PVDF is more rigid and easier to fabricate parts out of than these related materials. An ongoing activity is to fabricate larger aluminum tanks lined with PVDF. Based on measurements to date, one-year unvented storage should be possible for tanks designed to have similar pressure limits and ullage volumes.

Perspective on Storage

It must be emphasized that a complete treatment of the long-term stability of hydrogen peroxide is beyond scope here. For example, decay increases with temperature, so flight tanks should be tested under representative conditions over appropriate times. Decay and materials compatibility have been discussed extensively in the literature, e.g. by Schumb et al.[6] These authors noted that the ideal situation for long term storage is pure HTP in a clean container having no catalytic activity. Unstabilized HTP is also the best for long thruster life.

Some remarks made in Reference 1 unfortunately ignored rising decay rates and the importance of homogeneous decay due to contaminants in solution. In particular, the potential value of stabilizers in metal tanks should not be ruled out, to the extent that they mitigate the catalytic effect of metals in solution. A previous paper discussed heterogeneous decay on tank walls versus decay in solution, for sealed storage.[7]

Actual long term storage in sealed containers is the most realistic material compatibility test relevant to spacecraft tanks. HTP in vented containers might gain atmospheric water, which introduces mass errors into decay rate measurements. With or without leaks, atmospheric constituents cannot enter a pressurized container.

Discussion

HTP offers the potential for relatively low cost rapid development and testing of liquid propulsion customized for micro satellites. In terms of performance and spacecraft lifetime, HTP does not compete with hydrazine. Thus it is comforting that concepts for self-pressurization, advanced with HTP, can also be applied to hydrazine systems in order to avoid gas bottles while still offering gas jet attitude control to facilitate miniaturization. Decomposed hydrazine offers more performance even after cooling, because its constituents have lower molecular weights and do not condense as easily as the water in decomposed HTP.

Isp measurements reported herein indicate that the potentially 2-phase product gas (i.e. with condensing steam) still offers higher Isp than nitrogen when used in miniature gas jets for attitude control. Temperatures are low enough to permit using aluminum and fluoroelastomer seals in warm gas applications. Performance is even higher for monopropellant HTP liquid thrusters that are appropriate for translational maneuvers. Further, a fuel can be added if more challenging maneuvers warrant greater complexity.

When compared with compressed nitrogen, an equal mass of liquid HTP occupies 2-5 times less volume. Order-of-magnitude lower pressures also permit lighter tanks, even when the HTP tanks are massive enough to serve as primary structure while absorbing heat from warm pressurant gas. This is still true for bolt-together designs that have plastic liners for long term storage. Overall, self-pressurizing HTP propulsion technology appears to be feasible and attractive for tiny satellites, so work toward flight systems continues.

Acknowledgments

LLNL's MicroSat Program team made it possible to showcase and test the propulsion advances described herein in the context of autonomously-operating prototype satellites. Key individuals include Joe Kordas as Deputy Program Leader and Test Director, Don Antelman, Eric Breitfeller, Mark Jones, Larry Ng, Darron Nielsen, Jeff Robinson, Bill Taylor, Dean Urone, and Bruce Wilson.

Work was supported by the U.S. Air Force Research Laboratory. The authors wish to thank Christine Anderson, David Barnhart, and Steven Rodgers. This work was sponsored by the U.S. Government and performed by the University of California Lawrence Livermore National Laboratory under Contract W-7405-Eng-48 with the U.S. Department of Energy.

References

1. Whitehead, J.C., "Hydrogen Peroxide Propulsion for Smaller Satellites," SSC98-VIII-1, The 12th Annual Utah State University Small Satellite Conference, 1998. (or see http://www.ee.surrey .ac.uk/ee/cser/uosat/conf/wpapers.htm)

2. Simpkin, A.J., M.L. Chazen, et al, "KEW Divert Vehicle Propulsion System Technology Verification and Risk Reduction Program Phases I-V," vol 1, TR-PL-12360, Atlantic Research Corporation. Also Air Force Astronautics Laboratory report nr AFAL-TR-88-020, November 1988.

3. Whitehead, J.C., "Mars to Orbit with Pumped Hydrazine," American Institute of Aeronautics and Astronautics paper nr 99-2150, 1999.

4. Ledebuhr, A.G., J.F. Kordas, et al, "Autonomous, Agile, Micro-Satellite Technology for Use in Low Earth Orbit Missions," SSC98-V-1, The 12th Annual Utah State University Small Satellite Conference, 1998.

5. Burtoft, A.C., "A Small Combustion Chamber for Space Application," Journal of the British Interplanetary Society, 20, pp. 48-52, April 1965.

6. Schumb, W.C., C.N. Satterfield, & R.L. Wentworth, "Hydrogen Peroxide," Reinhold Publishing, New York, 1955 (reprinted by University Microfilms).

7. Monger, James M., "Sealed Storage of Concentrated Hydrogen Peroxide," Chemical Propulsion Information Agency, Publication No. 72, paper no. 69-1130I, 1965.

Appendix: Tank Temperature Predictions

Pure hydrogen peroxide releases 2889 J/g upon decomposing, or 2456 J/g for 85% HTP. The latter produces 60% water by mass and 40% oxygen. Water requires 2252 J/g to vaporize at 212 F (100 C), falling slightly to 1915 J/g at 400 F (205 C). Notably, about half the reaction energy of 85% HTP is associated with the water phase change.

When decomposed HTP is used for tank pressurization, a quantity of gas proportional to tank volume introduces a proportionate amount of heat into the tank over the course of expulsion. A worst-case tank temperature would result if all the excess energy is absorbed by the tank wall with no losses. This energy balance can be determined from the specific heat and mass of the tank wall.

For example, if decomposed 85% HTP at 300 psi cools to 300 F, approximately 90% of its steam has condensed. The bulk density is near 40 g/l for this two-phase mixture. Multiplying by 2000 J/g indicates that about 80 kJ must be absorbed by the tank walls for each liter of volume.

At 0.9 J/g-C, aluminum accepts 115 J/g upon heating by 128 C, i.e. from 21 C (70 F) to 149 C (300 F). Thus in the worst case of no heat losses, about 700 grams of tank wall is needed per liter of volume. Note that a tank half as heavy at 350 g/l would equilibrate around 400 F, largely because reduced steam condensation yields a reduction in pressurant mass.

The above calculations indicate ideal limits, not tank design criteria. In particular, the liquid propellant in the tank also absorbs heat. The specific heat of 85% HTP is 2.85 J/g-C, or 365 J/g over the 128 C rise considered above. Thus only 220 g of HTP per liter of ullage is enough to accept all the excess pressurant heat at 300 psi and 300 F. In reality, external losses are also significant for operational lifetimes (total time for tank expulsion) exceeding just a few minutes.

High ullage temperatures without steam condensation would theoretically improve system performance. However, the pressurant is a small fraction of system propellant for the HTP systems tested. Therefore, it is a practical compromise to let steam condense in the tank while avoiding excessive temperatures there.

Biography

John Whitehead earned undergraduate degrees in both science and engineering from Caltech. He received a doctorate in mechanical dynamics and controls from the University of California, Davis, in 1987. At the Lawrence Livermore National Laboratory, he led the development of miniature pump-fed rocket engines. Among his publications are those which have contributed toward understanding unsolved propulsion problems, such as SSTO and Mars departure. Since 1996, he has led development of small-scale hydrogen peroxide propulsion systems.

Mike Dittman earned his undergraduate degree in mechanical engineering from California Polytechnic State University, San Luis Obispo. He received his masters in mechanical engineering, controls and dynamics, from San Jose State University in 1993. Beginning in 1987 at Space Systems/Loral he was a lead engineer for many satellite operations including assembly, alignments, integration & test, control mechanism design & development, and spacecraft systems. Since 1997 he has made a broad set of contributions to micro satellite technology development efforts at LLNL.

Arno Ledebuhr completed studies in physics and math in 1976 at the University of Wisconsin, then earned masters and doctorate degrees in physics from Michigan State in 1982. He spent the following 4 years at Hughes, where he received 13 patents in projection display technology. At LLNL since 1986, he led advanced sensor development for the Brilliant Pebbles interceptor program, and the design of the 1994 Clementine lunar imaging payload. In 1996 he was the Clementine II program leader and is currently the MicroSat Technologies program leader.