Utah State University
DigitalCommons@USU

All Physics Faculty Publications | Physics

2010

Charge Dynamics in Highly Insulating Space Craft Materials

Alec Sim
Utah State University

JR Dennison
Utah State University

Follow this and additional works at: http://digitalcommons.usu.edu/physics_facpub

Part of the Physics Commons

Recommended Citation
Sim, Alec and Dennison, JR, "Charge Dynamics in Highly Insulating Space Craft Materials" (2010). *All Physics Faculty Publications.* Paper 1459.
http://digitalcommons.usu.edu/physics_facpub/1459

This Article is brought to you for free and open access by the Physics at DigitalCommons@USU. It has been accepted for inclusion in All Physics Faculty Publications by an authorized administrator of DigitalCommons@USU. For more information, please contact becky.thoms@usu.edu.

Charge Dynamics in Highly Insulating Space Craft Materials

A. Sim and J.R. Dennison

Abstract

We present a preliminary report on the theoretical and experimental study of transport models in highly insulating materials. The report is developed in four sections; first we give background on the nature of the problems in space craft charging, the contributions and connections made by the Utah State material physics group. Second we discuss the density of states to explore the connections between material composition and the microscopic and macroscopic transport equations. Third from Maxwell's equations we present an overview of the transport equations. Finally we present preliminary results using experimental data on Kapton™, the transport equations and relevant expressions for the density of states.

Introduction

Spacecraft in orbit are exposed to intense plasma environments and high energy particles. Charging to high potentials can lead to satellite material alterations degrading instrumentation performance or inducing systems failures, as well as creating potential safety hazards (Mandell, *et al.*), (Hastings and Garrett, 1996), (Novikov, *et al.*, 2009), (Griseri, *et al.*, 2005). The ubiquity of highly insulating materials in the design of spacecraft and many other technology components places special emphasis on understanding and modeling the electrical properties of the insulators. Detailed study of experimental data and physical models are critical for anticipating and mitigating potentially damaging charging phenomena (Dennison, *et al.*, 2006), (Hastings and Garrett, 1996), (Garrett, 2007). Developing a better understanding of the physics of insulating materials, increasing the versatility and reliability of charge transport models, and expanding the database of information for the electronic properties of insulating materials can assist designers in accommodation and mitigating these harmful effects (Hastings and Garrett, 1996), (Dennison, 2004).

It is the goal of this work and subsequent dissertation to unify both the experimental and theoretical basis of charge transport and related phenomena in highly insulating materials used in spacecraft design. We present a short summary of the problem, group structure at USU, theoretical back ground and conclude with preliminary results.

The complex relationships between spacecraft insulators and their surroundings are fundamentally

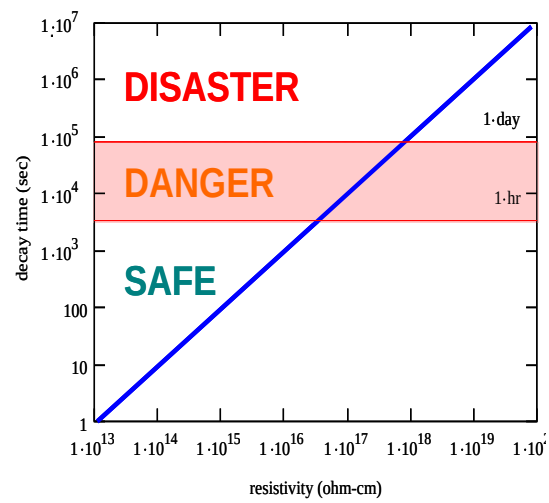

Figure 1: Given a repeated exposure time and high resistivity materials the build-up of charge can lead serious damage and spacecraft failure.

based on a detailed knowledge of how individual materials store and transport charge. The key to mitigating these effects is an understanding of the time required to dissipate harmful charge imbalances on and within the material used in spacecraft construction. (Figure 1) gives a rough estimation of the safety zones associated with charge decay times. The charge decay time results from the resistivity of the material as a function of electric field F, incident flux f, time t, and material temperature T: $\tau \propto \rho(F, f, t, T)^{-1}$. In our discussions of material properties we refer to the conductivity σ as the fundamental measure of charge

transport, where the resistivity is related to the conductivity by $\rho(F,f,t,T)^{-1} = \sigma(F,f,t,T)$.

The conductivity of a material is the key transport parameter in determining how deposited charge will redistribute throughout the system, how rapidly charge imbalances will dissipate, and what equilibrium potential will be established under given environmental conditions (Dennison, *et al.*, 2002). Further the conductivity connects the physical make up of a material with the number of available carriers, their type and how mobile charge is within the material. It is the low charge mobility of insulators that causes charge to accumulate where deposited, preventing uniform redistribution of charge and creating differential local potentials. It is therefore through careful experimental applications that we may come to understand the contribution of carrier type, carrier density and their mobility.

The USU Material Physics Group (MPG) has been developed to specifically address NASA's concerns for the charging of materials (Davies and Dennison, 1997), (Dennison, *et al.*, 2004), (Alec Sim and Thomson, 2005), (Abbott and Dennison, 2005), (Kite, *et al.*, 2000). The USUMPG has built an extensive knowledge base of the behaviors observed in many spacecraft materials (Dennison, *et al.*, 2009). This data base, (J.R. Dennison and Frederickson, 2006) in addition to application of theoretical models has been implemented in engineering tools used in spacecraft design (Dennison, et al., 2009). The accumulation of nearly 15 years of work has provided the USUMPG with a unique platform from which to study the spacecraft charging problem. Each of the experimental systems has been designed to test specific material behavior. (Figure 2) shows the relationship to each of the experimental systems and its dependence on conductivity. In each of these applications the USUMPG has implemented theoretical models to describe the observed behavior.

The current USUMPG engineering models are largely static in their predictions and therefore new models based on the dynamic physics largely developed for photoconductors, must be applied to make significant improvements in predicting time dependant behaviors. Consider a spacecraft near the danger point, see (Figure 1) which undergoes a high energy event; say a sudden high flux of energetic particles. Depending on the charge deposition rate, induced dissipation rate and local field the event may cause a system failure. The need for a dynamic description of spacecraft charging for all time scales is clear. Thus as a final step in this effort all of the models will be extended to include time dependant behavior.

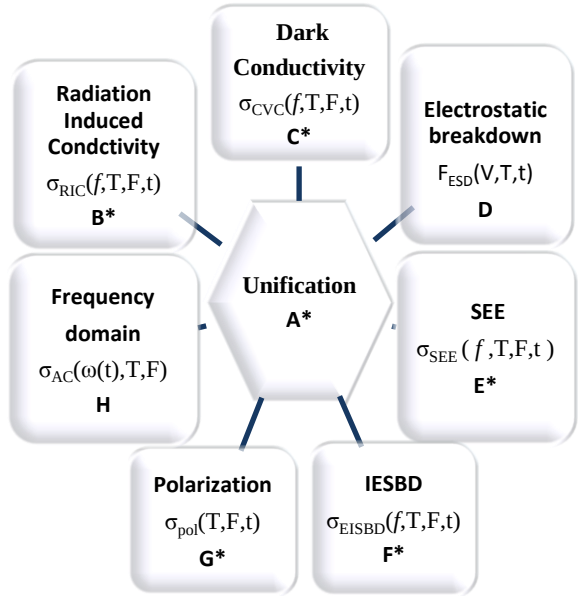

Figure 2: Group organization in relation to this work. Note that each sigma is a conduction mechanism associated with a specific set of experimentally measured parameters.

A. Model unification (Sim, 2010)
B. RIC = Radiation Induced Conductivity, (Corbridge, 2008)
C. CVC = Dark Current Conductivity, (Dekaney, 2009)
D. ESD = Electro Static Breakdown, (C Sim, 2010)
E. SEE = Secondary Electron Emission , (Hoffmann, 2009)
F. IESBD = Induced Electrostatic Break-Down, (Roth, 2009)
G. Pol= Impulse polarization studies, (Brunson, 2009)
H. AC = dielectric constant characterization

*Refers to RMSGC funded research

Recently it has become clear that all of these behaviors may be describe in a single theoretical model. The task of unifying these models will be completed in three stages as follows. First a complete review of the literature, Second a common nomenclature and physical description will be applied to each of the models and finally new information about physical connections and understanding will be brought to light.

Theory

How can we model charge transport and conductivity in disordered insulators as a function of material interactions with incident radiation *f*, electric field *F*, temperature *T*, position *x* and time *t*? In practice the problem is very complex and requires a detailed understanding of the microscopic mechanism at work. However, in a general way we can write the observed current density as $J = \sigma F$, where σ is the conductivity and *F* is the electric field, thus conductivity is paramount to studding a given material.

The conductivity of a single carrier is defined as $\sigma = qn\mu$, where *q* is the charge of the carrier, *n* is the number of carriers and μ is the mobility. The physics to describe a material is found in the dependence of *n* and μ on temperature, time, electric field and incident radiation. The following is a quick list of the parameters, note the subscript *i* defines a specific carrier type and the parameters in brackets are the dependences of a given quantity.

- *Charge carriers*: q_i particles that carry charge, e.g.; electrons, ions, holes and pseudo particles such as exitons and polarons, of these only electrons are considered here. Holes are assumed to be immobile.
- *Mobility* $\mu(T, F, t)$ measures the tendency of an individual charge to move in response to the applied field *F*. Defined as the ratio of carrier drift velocity within the material to applied field $\mu = \frac{v_d}{F}$.
- *Carrier density* $n(f, F, T, t)$ the density of a *collection of charges* per unit volume can depend on material properties and on temporal response of charges to *F* and *T*. In complex cases, material properties can be modified as a function of *F*, *T* or flux of incident particles.

Here we have ordered the parameters *q*, μ and *n* as the type of carrier, the single carrier response and the collective single carrier density. Given the description of macroscopic material response as a function of f, F, T and t we now ask what mechanisms within the material give rise to observed behaviors.

Conduction Mechanisms

There are a large number of mechanisms that can contribute to the observed current: Ohmic, polarization, space-charge, hopping processes, diffusion, dispersion and secondary electron emission, (SEE). Thus we may write the total measured current as:

$$J_{tot} = J_{ohmic} + J_{polarization} + J_{space\,charge} + J_{hopping} + J_{diffusion} + J_{dispersion} + J_{SEE}$$

Each of these processes can be categorized by considering whether they are the result of other fundamental processes or are fundamental. If the process is one that involves no other process, hopping as an example, then it is fundamental in nature. Processes that involve more than one fundamental process are Multi-Component. A summary of processes observed in USUMPG experiments is given in Table 1.

Table 1: This table lists the conduction process as a function of interaction or fundamental physical process.

Processes	*Interaction*
Drift	Scattering
Trapping	Local Potential
Hopping	Quantum Tunneling and thermal activation
Luminescence	Emission-Absorption Single of Multi-Component
Diffusion	Single or Multi-Component
Dispersion	Single or Multi-Component
Secondary Election Emissions	Multi-Component
Radiation Induced Conductivity	Multi-Component
Space Charge	Single or Multi-Component
Polarization	Molecular or atomic distortion
Electrostatic Breakdown	Multi-Component

Density of States

How do the conductivity and mobility depend on the material properties? Highly disordered insulating materials are generally wide band gap materials with considerable intrinsic and extrinsic disorder. The disorder results from concentrations of impurity atoms, the geometry of polymer chains and their impurities. Further, the polymer chains do not lend themselves to the simplifications of a lattice construct and have a myriad of structural and internal degrees of freedom. Additionally, polar groups attached to the chains, cross linking and broken bonds have significant influence on carrier mobility (JR Dennison and Arnfield, 2009), (Wintle, 2003). This high level of disorder leads to a density of states, DOS with complex energetic and positional dependencies.

(Figure 3) shows an idealization of the effects of disorder on the DOS. Here *N(E)* is the DOS as a function of energy and *μ(E)* is the mobility as a function of energy. The mobility is determined by wave function overlap. Thus, when *N(E)* is such that wave function interaction is small the states in the gap become

localized (Anderson, 1958). We categorize the DOS states into three regions, conduction, shallow and deep. In conduction states the carriers move freely as *N(E)* and *μ(E)* are high. In the second region *N(E)* is still fairly high but *μ(E)* begins to drop due to localization onset, thus this point in the figure is called the mobility edge. In the third region both *N(E)* and *μ(E)* are low and the system is fully localized.

Carriers in shallow states can escape by thermal promotion to the conduction band, (CB). Carriers in the mid- to deep-localized states only escape in two ways, thermally activated hopping and variable range hopping, (TAH and VRH). For high temperature, we expect that the (TAH) mechanism will dominate as excitation from shallow traps is possible. For much lower temperatures only (VRH) is possible, thus carriers proceed by hopping, (tunneling) between states whose position and energy dependent wave functions have significant overlap. The range of the hop will change as a function of the DOS energy and thus different regions can act in different ways producing different behaviors.

The processes of drift, diffusion, dispersion and trapping are all governed by scattering, hopping or hopping-like interactions within the DOS. Radiation induced conductivity (RIC) and luminescence are generally multi-step processes that involve transitions from the conduction or shallow states to deep states or the valence band. Processes like secondary electron emission, (SEE) and breakdown; (IESBD and ESD) are composites that involve deep trapping or distortion of the DOS due to high charge density or high field effects. There are many reviews in the literature on each of these areas of study, see for instance (Dennison and Brunson, 2008), (H. Bässler, 1993), (Mott, 1973), (Montanari, *et al.*, 2001),(Rose, 1955).

Given a specific description for the DOS we can estimate the charge density in both trapped carriers and conduction states. This problem can be approached in two ways. First one can attempt to construct accurate atomistic models of appropriate disorder, (Böttger and Bryksin, 1985). Second the DOS can be estimated as an average function that treats specific energy regions within the DOS in different ways, (Monroe, 1985), (Dennison, et al., 2009), (Arkhipov, *et al.*, 2006).

In this work we take that latter approach. There is a great deal in the literature to support the use of specific functions within the DOS for describing nearly all of the physical phenomena observed, (Monroe, 1987), (Orenstein and Kastner, 1981), (Schmidlin, 1980), (Rose, 1951), (H. Bässler, 1993), (V. I. Arkhipov, 2006). Given an accurate description of the DOS, number of transport states and carriers the current may be estimated using the transport equations. In the following sections we present a brief introduction to **microscopic**, (atomistic) mechanisms and the **macroscopic**, (average behavior) approach. Finally we make contact with the **transport** equations that represent a combination of average microscopic, macroscopic behavior and therefore fundamental material structure.

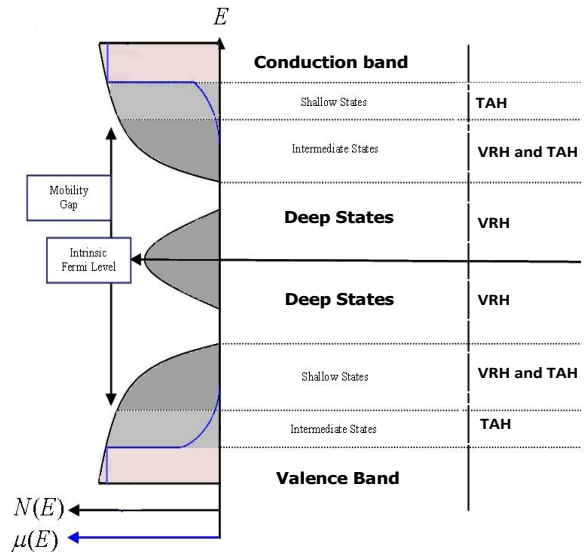

Figure 3: A composite plot showing the band gap, mobility gap and a possible arrangement of the DOS resulting from both intrinsic and extrinsic disorder. The thermally activated, (TAH) and variable range, (VRH) hopping conduction mechanisms are shown at the energy where they become important.

Microscopic transport

The microscopic description of charge transport, and thus the current are dependent on stochastic processes between individual atomic or molecular sites. These processes are driven with the energy supplied by the phonon spectrum, particle flux (where radiation is present) and electric field, ***F***. It is then the interaction of atomic or molecular wave functions, effects of the applied field, *N(E)*, and *μ(E)* that determines the observed transport. Consider two atomic states $\acute{\eta}$ and η one of which is occupied by a carrier (perhaps an electron), and the other which is empty. In this case, there are two possibilities. First, the electron will escape via thermal excitation and is either recaptured or excited to the conduction states. The second occurs when phonon contribution is small compared with the wave function interaction between the sites. The change in the probability for a given site η to be occupied is given by the Pauli master equation, (PME)

$$\frac{\partial p(\eta,t)}{\partial t} = \sum_{\acute{\eta}} \left(U_{\acute{\eta},\eta} p(\eta,t) - U_{\eta,\acute{\eta}} p(\eta,t) \right) \qquad 1.0$$

Here $p(\eta, t)$ is the probability that an atomic state is occupied at time t and $U_{\eta,\acute{\eta}}$ is the transition probability per unit time for $\eta \xrightarrow{trans} \acute{\eta}$.

Many authors have shown the connection between the macroscopic measurements resulting in behaviors described in Table 1 and the microscopic (PME) or some variation of the (PME); see for instance (Schmidlin, 1980), (Wintle, 1998), (Böttger and Bryksin, 1985). In practice however calculation of the conductivity from Eq. (1.0) is difficult and can only be done numerically and semi-analytically with approximations that are often difficult to quantify in an experimental context.

In principle the PME can be applied to any material as it is an atomistic picture. However, it is most useful in materials with low to modest disorder where estimation of the wave function interaction is more accurate. In spacecraft materials -particularly polymeric insulators- we often encounter disorder that is too great for the PME to be useful in practice. Thus we rely on averaging and approximations to estimate the results. The current USUMPG models (Apsley and Hughes, 1974) and (Wintle, 1990) used to describe VRH conductivity (Dennison, et al., 2009) are based on the ideas of (Ambegaokar, *et al.*, 1971) and (Miller and Abrahams, 1960) in conjunction with mean field approximation techniques. These approaches are largely macroscopic in nature. We therefore turn out attention to the development of a macroscopic description of charge transport.

Macroscopic transport

From the macroscopic point of view we first approach the problem using Maxwell's equations in media:

$$\nabla \cdot \boldsymbol{D} = \rho_f \qquad 2.0$$

$$\nabla \cdot \boldsymbol{B} = 0 \qquad 2.1$$

$$\nabla \times \boldsymbol{E} = -\frac{\partial \boldsymbol{B}}{\partial t} \qquad 2.2$$

$$\nabla \times \mathbf{H} = \mathbf{J}_f + \frac{\partial \mathbf{D}}{\partial t} \qquad 2.3$$

Where we use the continuity equation to relate the current to the change in charge density:

$$\nabla \cdot \mathbf{J} + \mathbf{J}_{\mathbf{inj}} = -\frac{\partial \rho}{\partial t} \qquad 2.4$$

Here ρ_f is the free charge density, **D** is the electric displacement field, **B** is the magnetic field, $\mathbf{J}_{\mathbf{inj}}$ is the injected current that becomes either space charge or migrating trapped charge and **H** is the magnetizing field. Only in rare cases is the effect of the magnetic field considered, thus in general we concern ourselves only with equations (2.0) and (2.4). Note that inherent in these equations is the total charge density, displacement field and polarization charge given by:

$$\rho_{tot} = \rho_{pol} + \rho_f \qquad 3.0$$

$$\boldsymbol{D} = \epsilon_0 \boldsymbol{F} + \boldsymbol{P} \qquad 3.1$$

$$\rho_{pol} = -\nabla \cdot \boldsymbol{P} \qquad 3.2$$

Since the current is the sum of effects produced by all species of carriers, molecular and atomic sites we may write the charge density as follows:

$$\rho_i = q_i n_i \qquad 4.0$$

Here *i* charge species and n_i is its concentration and q_e is the electronic charge, (Dissado and Fothergill, 1992). Note that we can refer here to charge in trapped states, bands, free charge or even surface charge. The difficulty in determining the flavor of macroscopic equations to use is a reflection of the complexity of the material and its environment, i.e. boundary conditions, DOS function models and Fermi Dirac statistics.

Transport Equations

Using Poisson's equation $\nabla \cdot \boldsymbol{D} = \rho_f$, the continuity equation $\nabla \cdot \mathrm{J} + \mathrm{J}_{\mathrm{inj}} = -\frac{\partial \rho}{\partial t}$, Ohm's law, a thermodynamic description of charge excitation and capture we can write down a set of one dimensional non-liner differential transport equations that describe the nature of charge transport in space craft materials.

$$J = nq\mu F + \epsilon\epsilon_0 \dot{F} + \frac{9\epsilon\epsilon_0 F^2}{8x} - \epsilon\epsilon_0 D_{dif} \frac{d^2F}{dx^2} \qquad 5.0$$

$$\frac{\partial n_t(x,t,\varepsilon)}{\partial t} = nC_t N_t(\varepsilon) - C_t N_c(\varepsilon) n_t(x,t,\varepsilon) e^{-\frac{(E_c - E_i)}{kT}} \qquad 5.1$$

Where the total charge, energetic dependence of the total charge and DOS is captured in the following definitions;

$$n = n_f + n_t \qquad 5.2$$

$$n_t = \int_{\varepsilon_{low}}^{\varepsilon_{high}} n_t(x,t,\varepsilon)\, d\varepsilon \qquad 5.3$$

$$N_t = \int_0^{\infty} N_t(\varepsilon)\, d\varepsilon \qquad 5.4$$

Eq. (5.0) is the sum of the, drift, polarization, space charge and diffusion currents. Note the continuity equation accounts for additional currents such as those due to radiation and recombination. Eq. (5.1) defines the effect of the trapping capture cross section C_t, density of traps N_t, density of conduction states N_c and thermal

excitation from an energy E_i to the conduction states at E_c due to the phonon spectrum. Eq. (5.3) is the integration over the time dependant trapped carrier distribution and Eq. (5.2) is the total carrier concentration. The final Eq. (5.4) is the integrated average over the DOS function and is therefore the total density of states available to the carrier concentration. These six equations combine with an understanding of the material gives tremendous physical insight into the nature and prediction of behavior for polymeric spacecraft materials. Thus we present an application of the transport equations in what follows.

Results

It is the overall goal of this dissertation work funded by the RMSGC to unify the experimental results collected by USUMPG (Figure 2) and the transport equations in a common language with the inclusion of time dependant behavior. A complete description of the proposed work is given in (Sim 2010) and may be summarized as follows: literature review, development of theoretical models with common nomenclature and physical concepts that bring together the results of experimental efforts at USUMPG, the development and implementation of new time dependant models, upgrade current USUMPG engineering tools used by NASA and development of new experimental methods designed to single out pertinent physical phenomena.

As an illustration of the progress made towards completing these goals we present brief results from theoretical and experimental work in time dependant radiation induced conductivity on Kapton HN™ for two DOS models (See Figures 3 and 4). Experimental data taken by the USUMPG, (JR Dennison and Spalding, 2009),(Corbridge, 2008) is normalized and fitted with the transport equations (Weaver, *et al.*, 1977), (A. P. Tyutnev, 1984a).

The results are presented qualitatively to highlight only the physical dependence of the DOS and solution methods used. The first DOS is a delta function $N_t(\varepsilon) = N_0\delta(\varepsilon - \varepsilon_0)$, (Weaver, et al., 1977) and the second an exponential $N_t(\varepsilon) = \frac{N_0}{kT}e^{-\frac{\varepsilon}{kT}}$, (A. P. Tyutnev, 1984b). The first DOS is applied both numerically and analytically the second only analytically. Note both analytical solutions are in the long time scale limit. In (Figure 3) the data is presented with all three fits.

(Figure 4) presents the residuals to the numerical and two analytical expressions compared with measured data. For times before 20 seconds the experimental system is settling and is therefore not considered in the analysis. There are two clear regions in the data. First is the region defined as less than 100 seconds and 2nd is the region greater than 100 seconds. The first region has a marked deviation between the numerical solution and both analytical solutions. However, the analytical solution for a delta function DOS model provides a good fit only for data after 20 seconds and before 300 seconds. After 300 seconds the analytical fit using the

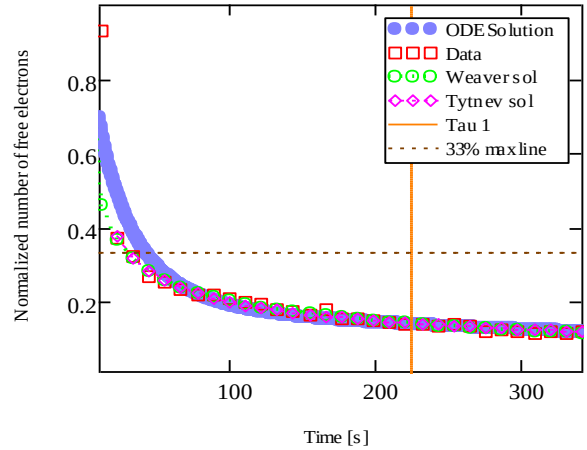

Figure 3: The solutions to the transport equation fitted to RIC data for Kapton™ HN. Three solutions are considered. First a numerical solution using a delta function DOS. Second an analytical solution using a delta function DOS. The third fit is an analytical solution using an exponential DOS.

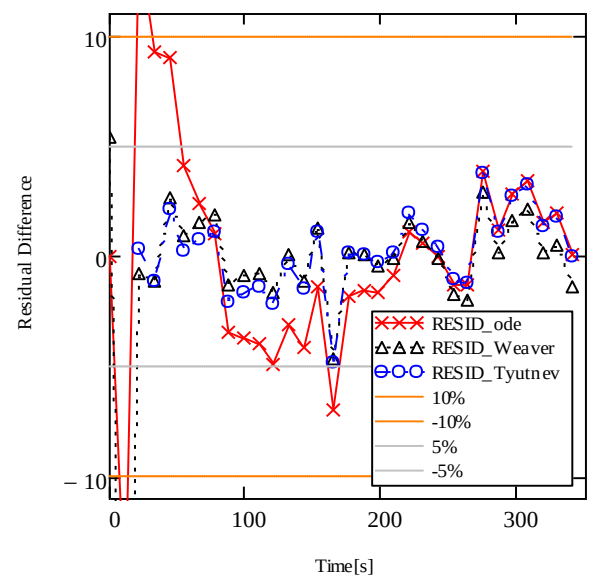

Figure 4: Residuals of the fitted solutions to RIC data for Kapton™. Error lines are show for 10% and 5% error respectively. Three residuals are considered. First a numerical solution using a delta function DOS. Second an analytical solution using a delta function DOS. The third fit is an analytical solution using an exponential DOS.

delta function DOS begins to fail. Only the exponential DOS model provides a good fit for all data considered.

There are three distinct possibilities for the observed behavior. For the numerical solution it is clear that our numerical method is insufficient for early time scales but seems to do well for long time scales. This becomes clear when the numerical method and the analytical solution for the delta function model are compared. The two approaches disagree strongly in the first region and modestly in final region. The slight disagreement in the tail of the data is not surprising as the complete transport equations contain additional recombination terms not accounted for in the analytical solution. The second possibility is that the delta function DOS model is incorrect. In the literature (Aragoneses, *et al.*, 2008), (A. P. Tyutnev, 1983), (Hodges, 2010) Kapton™ is reported to have an exponential DOS and we see better agreement from the analytical solution of (A. P. Tyutnev, 1983) to the data over the entire data set. It is interesting to note that the numerical solution and that of Tyutnev agree well for long timescales. Finally we must consider the condition of the original data. The data has not been adjusted for signal drift due to previous irradiations. This can affect the data by skewing the long time tails to a higher current than would otherwise be expected and could affect any fitting algorithm that uses a weighting function placing emphasis on the tails. This type of weighting is applied in our analysis and we therefore expect some improvement when the corrections to the data are made.

These results highlight both the importance of DOS modeling and application of the transport equations in time dependant behavior. Since the analytical and numerical solution for the delta function model are not in complete agreement, investigation of the numerical scheme and experimental conditions is required. Again we stress that this is a preliminary result and is only presented to highlight the progress thus far and demonstrate that at least in part the concepts presented above are physically relevant. While the results warrant further work it's clear that our models are in reasonable agreement with time dependant data.

In conclusion, we have presented a consistent framework for the theoretical and experimental study of highly insulating space-craft charging materials that will when completed unify 15 years of work at USUMPG. The author thanks the RMSGC for its generous support of this work and that of the USUMPG.

References

A. P. Tyutnev, G. S. M., A. V. Vannikov, A. F. Dunaev, V. S. Saenko, V. S. Likhovidov,, 1983,"Kinetics of Radiation-Induced Conductivity in Some Polymers," Physica Status Solidi (a) **75**, 385.

A. P. Tyutnev, V. S. S., A. I. Karpeurin, G. S. Mingaleev, V. I. Arkhipov, A. I. Rudenko, A. V. Vannieov,, 1984a,"Radiation-Induced Conductivity in Polymers under Continuous Irradiation," Physica Status Solidi (a) **83**, 365.

A. P. Tyutnev, V. S. S., A. V. Vannikov, V. E. Oskin,, 1984b,"Radiation Induced Dielectric Effect in Polymers," Physica Status Solidi (a) **86**, 363.

Abbott, J. and J. Dennison, 2005, "Methods for Determining Crossover Energies in Insulating Materials" in *Utah State University Student Showcase*, Logan, UT.

Alec Sim, J. R. D. and C. Thomson, 2005, "Evolution of the Electron Yield Curves of Insulators as a Function of Impinging Electron Fluence and Energy" in *Proceedings of the 9th Spacecraft Charging Technology Conference*, Epochal Tsukuba, Japan), p. 19.

Ambegaokar, V., B. I. Halperin, and J. S. Langer, 1971,"Hopping Conductivity in Disordered Systems," Physical Review B **4**, 2612.

Anderson, P. W., 1958,"Absence of Diffusion in Certain Random Lattices," Physical Review **109**, 1492.

Apsley, N. and H. P. Hughes, 1974,"Temperature and Field-Dependence of Hopping Conduction in Disordered Systems," Philosophical Magazine **30**, 963.

Aragoneses, A., M. Mudarra, J. Belana, *et al.*, 2008,"Study of Dispersive Mobility in Polyimide by Surface Voltage Decay Measurements," Polymer **49**, 2440.

Arkhipov, V. I., I. I. Fishchuk, A. Kadashchuk, *et al.*, 2006,"Charge Transport in Disordered Organic Semiconductors," Photophysics of Molecular Materials, 261.

Böttger, H. and V. V. Bryksin, 1985, *Hopping Conduction in Solids* (VCH, Deerfield Beach, FL).

Corbridge, J., 2008, Thesis (Utah State University).

Davies, R. and J. Dennison, 1997,"Evolution of Secondary Electron Emission Characteristics of Spacecraft Surfaces," Journal of Spacecraft and Rockets **34**, 571.

Dennison, J. Gillespie, S. Hart, *et al.*, 2009,"Engineering Tool for Tempurature, Electric Field and Dose Rate Dependence of Low Conductivity Spacecraft Materials," AIAA **092407**.

Dennison, J., 2004, "Â€Œinteraction of the Space Environment with Spacecraft Materialsâ€ • " in *Invited Seminar*, Alcatel Space Facility, Cannes, France.

Dennison, J., A. Chang, N. Nickles, *et al.*, 2002, "Database of Electronic Properties of Spacecraft Materials for the Nasa See Spacecraft Charge Collector Knowledgebase" in *NASA Space Environments and Effects Kickoff Meeting*, San Diego, CA.

Dennison, J., C. Thomson, and A. Sim, 2004, "The Effect of Low Energy Electron and Uv/Vis Radiation Aging on the Electron Emission Properties and Breakdown of Thin-Film Dielectrics" in *Proceedings of the 8th 2004 IEEE Dielectrics and Electrical Insulation Society (DEIS) International Conference on Solid Dielectrics (ICSD)*, Piscataway, NJ), p. 967.

Dennison, J. R. and J. Brunson, 2008,"Temperature and Electric Field Dependence of Conduction in Low-Density Polyethylene," IEEE TRANSACTIONS ON PLASMA SCIENCE **36**, 2246.

Dennison, J. R., J. Brunson, P. Swaminathan, *et al.*, 2006,"Methods for High Resistivity Measurements Related to Spacecraft Charging," IEEE TRANSACTIONS ON PLASMA SCIENCE **34**, 2191.

Dissado, L. A. and J. C. Fothergill, 1992, *Electrical Degradation and Breakdown in Polymers* (P. Peregrinus, London).

Garrett, H. B., I. Jun, A. A. Shapiro,, 2007, "Interstellar Space Missions: Ultra-Reliability Requirements and Engineering Issues" in *45th AIAA Aerospace Sciences Meeting and Exhibit*, Reno, Nevada).

Griseri, V., C. Perrin, K. Fukunaga, *et al.*, 2005,"Analysis of Electron Behaviour in Polymeric Films During Electronic Irradiation," Electrical Insulation and Dielectric Phenomena, 2005. CEIDP'05. 2005 Annual Report Conference on, 645.

H. Bässler, 1993,"Charge Transport in Disordered Organic Photoconductors a Monte Carlo Simulation Study," physica status solidi (b) **175**, 15.

Hastings, D. and H. Garrett, 1996, *Spacecraft-Environment Interactions* (Cambridge Atmospheric and Space Science Series).

Hodges, J., 2010,"Novel Surface Potential Measurements Using Th Flipper," Masters thesis proposal.

J.R. Dennison, J. B., Prasanna Swaminathan, Nelson Green and A. R. Frederickson, 2006,"Methods for Resistivity Measurements Related to Spacecraft Charging," IEEE Transaction on Plasma Science **34**, 2191.

Jr Dennison, A. S., Jerilyn Brunson, Steven Hart, Jodie Gillespie, Justin Dekany, Charles Sim and D. Arnfield, 2009, "Engineering Tool for Temperature, Electric Field and Dose Rate Dependence of High Resistivity Spacecraft Materials Paper Number" in *Proceedings of the 47th American Institute of Aeronautics and Astronomics Meeting on Aerospace Sciences*).

Jr Dennison, J. G., Josh Hodges, Rc Hoffmann, J Abbott, Alen Hunt and R. Spalding, 2009, "Radiation Induced Conductivity of Highly-Insulating Spacecraft Materials" in *American Institute of Physics Conference Proceedings Series*, Melveille, NY, 2009 (American Institute of Physics), p. 203.

Kite, J., J. R. Dennison, W. Y. Change, *et al.*, 2000, "Effects of Evolving Surface Contamination on Spacecraft Charging" in *American Physical Society Four Corner Sectional Meeting*, Fort Collins, CO.

Mandell, M., I. Katz, and M. Hilton, "Nascap-2k Spacecraft Charging Models: Algorithms and Applications, in 2001: A Spacecraft Charging Odyssey," Proceed. of the 7th Spacecraft Charging Technology Conf., 23â€“27 April, 2001, 499â€“507.

Miller, A. and E. Abrahams, 1960,"Impurity Conduction at Low Concentrations," Phys. Rev. **120**, 745.

Monroe, D., 1985,"Hopping in Exponential Band Tails," Phys. Rev. Lett. **54**, 146.

Monroe, D., 1987,"Band-Edge Conduction in Amorphous Semiconductors," Disord. Semicond., 705.

Montanari, G. C., G. Mazzanti, F. Palmieri, *et al.*, 2001,"Space-Charge Trapping and Conduction in Ldpe, Hdpe and Xlpe," Journal of Physics D Applied Physics **34**, 2902.

Mott, N. F., 1973,"Transport in Disordered Materials," Physical Review Letters **31**, 466.

Novikov, L. S., V. N. Mileev, E. N. Voronina, *et al.*, 2009,"Radiation Effects on Spacecraft Materials," Poverkhnost, 32.

Orenstein, J. and M. A. Kastner, 1981,"Thermalization and Recombination in Amorphous Semiconductors," Solid State Commun. **40**, 85.

Rose, A., 1951,"An Outline of Some Photoconductive Processes," RCA Review **12**, 362.

Rose, A., 1955,"Space-Charge-Limited Currents in Solids," Physical Review **97**, 1538.

Schmidlin, F. W., 1980,"Kinetic Theory of Hopping Transport. I. The Formalism and Its Relationship to Random Walks," Philosophical Magazine B Physics of Condensed Matter Statistical Mechanics, Electronic, Optical and Magnetic Properties **41**, 535.

Sim , A., (Utah State University, Logan, UT, 2010).

V. I. Arkhipov, I. I. F., A. Kadashchuk, H. Bässler,, 2006, in *Photophysics of Molecular Materials*, edited by L. Guglielmo Charge Transport in Disordered Organic Semiconductors, 2006), p. 261.

Weaver, L., J. Shultis, and R. Faw, 1977,"Analytic Solutions of a Model for Radiation-Induced Conductivity in Insulators," Journal of Applied Physics **48**, 2762.

Wintle, H. J., 1990,"Basic Physics of Insulators," IEEE Trans. Electr. Insul. **25**, 27.

Wintle, H. J., 1998, "Charge Motion and Trapping in Insulators: Surface and Bulk Effects" in *Electrical Insulation, 1998. Conference Record of the 1998 IEEE International Symposium on*), p. 1.

Wintle, H. J., 2003,"Charge Motion in Technical Insulators: Facts, Fancies and Simulations," IEEE Transactions on Dielectrics & Electrical Insulation **10**, 16p.