THE GPS-LINKED TRANSPONDER—A COMMAND, TELEMETRY, AND POSITIONING SYSTEM FOR SMALL SPACECRAFT

William S. Devereux and Dennis J. Duven
The Johns Hopkins University Applied Physics Laboratory
Laurel, Maryland 20723-6099

Abstract

A proposed GPS-Linked Transponder (GLT) Command, Telemetry, and Positioning System is described that offers significant advantages over present systems. The new system would replace the standard coherent transponder and modify existing ground-based systems to provide the U.S. space industry with significantly smaller and lighter-weight flight systems in addition to simplified ground stations with reduced operating costs. The GLT comprises a NASA STDN/DSN-compatible or AFSCN/SGLS-compatible command receiver/detector, a 20-Mbps-capable PCM/PSK telemetry transmitter with a selectable-rate FEC encoder and optional encryptor, and a dual-mode spacecraft positioning subsystem including a full GPS receiver/navigator and/or GPS transdigitizer. The GLT design is based on similar hardware developed by APL for SDIO. The system will recover high-accuracy spacecraft position and time data—either in real time autonomously or in near-real time on the ground—using advanced GPS positioning techniques. A simplified command receiver option is also available when compatibility with existing standards is not required and improved capability is desired. In the transdigitizer-only mode, mass and size are reduced to nearly one-tenth of existing transponder systems. Other advantages include reduced complexity and significantly higher uplink and downlink data rate communications than presently supported. Five ground-station configurations are defined, each providing varying levels of spacecraft positioning accuracies to the user.

Introduction

SGLS and NASA standard transponders are used as flight components of many satellite communication and positioning systems, providing uplink command reception and detection, primary downlink telemetry transmission, and positioning by coherently retransmitting an uplinked ranging signal. This paper presents an alternate approach that provides the same basic capabilities (command, telemetry, and positioning) with smaller, lighter, simplified spacecraft hardware and ground stations that are far less complex with vastly simplified mission command, control, and positioning operations. The new system is called the GPS-Linked Transponder (GLT) Command, Telemetry, and Positioning System. The GLT, a new spacecraft subsystem that would replace the standard transponder, is ideally suited for small satellites or any spacecraft with command, telemetry, and moderate-to-high-accuracy positioning requirements and where reduced spacecraft size and weight are important. Likewise, the GLT, along with its associated ground system, is ideally suited for small satellite programs, with their characteristically small budgets; by using the new system, it is anticipated that millions of dollars can be saved, per mission, in hardware acquisition and mission operations costs. At a time when NASA and Air Force Space Command leaders are calling for "faster, cheaper, better," the GLT concept seems most appropriate.

The present method of positioning satellites involves the use of complex spacecraft hardware to accomplish coherent retransmission of an uplinked ranging signal and to allow two-way Doppler measurements on the ground. Several severe penalties are imposed on the user with this approach, including the complexity and excessive size, mass, and cost of the spacecraft hardware. Additionally, because complex ground-station hardware is needed to generate and transmit the ranging signals to the spacecraft and to receive and process the signals retransmitted by the transponder, the user is constrained to more costly institutional methods for generating accurate orbit estimates of the spacecraft. Mission planning, operations, and ground-system scheduling tasks to accommodate the positioning process are significant, labor intensive, and costly.

To overcome these limitations and provide significant enhancements, the GLT incorporates a dual-mode positioning system that uses the GPS satellite navigation signals in a unique way to satisfy the positioning requirements of the host spacecraft. The GLT uses a GPS transdigitizer and, optionally, a full GPS receiver, depending on mission requirements and budgets. The proposed system would significantly reduce the complexity, size, mass, and cost of the spacecraft hardware and also would simplify the ground-based processing by removing the coherent uplink carrier and ranging requirement. Ground stations could be smaller and more transportable, providing flexibility for mission operations, even to the point where individual principal investigators could afford to command, control, track, position, and collect data from their own spacecraft. For typical moderate-accuracy positioning requirements of low-Earth-orbiting spacecraft, only one ground

station is required. Position, velocity, and ephemeris data would be available in near-real time to NASA, DoD, and the investigator. Traditional institutional orbit processing facilities would be freed of routine tasks.

In time, fully embedded GPS receivers will be the navigation instrument of choice for most spacecraft, providing full autonomy for position-dependent sensor orientation maneuvers, attitude control, and data/position correlation. The GLT system design concept and topology promote that goal by providing a logical path (both technical and programmatic) for the embedment of GPS receivers into the spacecraft communciations system. However, many small satellites cannot yet accommodate the cost, size, and weight of space-qualified GPS receivers. For these applications, the GLT, via the transdigitizer, provides an alternate method for the exploitation of the GPS system for spacecraft positioning.

For missions where the transdigitizer-derived position data are adequate (the vast majority of missions), a GLT configured with only a transdigitizer (versus a full GPS receiver) is the optimal configuration. Impacts to the spacecraft are nearly imperceptible as measured by size, mass, and power dissipation, and reliability is inherently increased. For missions where a full GPS receiver is required, the transdigitizer is still incorporated, providing a built-in backup with a graceful degradation of service. Whether used in conjunction with a full GPS receiver or by itself, the transdigitizer provides an "umbilical cord" between the spacecraft and ground controllers, yielding high-accuracy positioning capability using high-reliability and minimum-complexity hardware on the spacecraft while allowing the sophisticated positioning processing to execute on the ground. Thus, one could expect the use of the transdigitizer to overcome the hesitancy of programs to rely solely on fully autonomous GPS receivers for orbit determination.

This paper describes the GLT, its associated ground system, and the application and importance of the system to small satellite programs. Preliminary operational and physical characteristics are defined, and a summary of predicted positioning accuracies is provided.

Background

Although the system described herein represents a new spacecraft command, telemetry, and positioning system, many of its components have significant heritage. For over 17 years, the Applied Physics Laboratory has been supporting the Navy, the Air Force, and the Strategic Defense Initiative Organization (SDIO; now the Ballistic Missile Defense Organization) in developing sophisticated GPS positioning systems for high dynamic platforms. The concept of using GPS translators (the analog predecessors to the transdigitizer) for ground-based missile trajectory reconstruction and guidance system evaluation was first developed and tested by APL in the mid-1970s, and has been reduced to practice as evidenced by the processing of over 140 ICBM test flights using APL's Post-Flight Tracking System, which generates high-accuracy best-estimate trajectories.[1-5] The GPS transdigitizer was first invented at APL in the early 1980s.[6,7] The latest GPS transdigitizer developed by APL, and the predecessor to the proposed GLT, is called the GPS/Telemetry Transmitter (GTT), which was developed for SDIO to satisfy the need for miniature flight test and evaluation instrumentation in support of space-based missile interceptor test programs.[8,9] Two flight-qualified GTT systems, each weighting ≈ 1.1 lb, have been delivered to SDIO for use during an upcoming missile intercept flight test. The concept of transmitting high-data-rate telemetry and instrument data concurrently with transdigitized GPS data, proven by the GTT, is incorporated in the design of the GLT system.

Work by APL and others supports the feasibility of positioning satellites using GPS. As a proof of concept for remote positioning of moving bodies using GPS translators, APL flight-tested a translator on a Transit satellite (called Transat) launched in 1978, and periodically tracked the satellite with ground-based GPS processing equipment for over 10 years.[10] The autonomous positioning of satellites using spaceborne GPS receivers was first demonstrated in the early 1980s when APL developed and flew four GPSPAC systems,[11] and most recently by NASA and the Jet Propulsion Laboratory on the TOPEX/Poseidon spacecraft.[12] LeFevre and Mulally[13] present arguments for the use of stand-alone analog translators for ground-based positioning of small satellites. Marth and Stott[14] describe a combined Tracking and Data Relay Satellite System (TDRSS) command receiver/antenna steering system and GPS receiver for use on spacecraft.

Theory of Operation

The GLT and its associated ground system (Fig. 1) are equivalent to the NASA standard transponder and associated Spaceflight Tracking and Data Network (STDN) or the USAF Space Ground-Link System (SGLS) transponder and associated Air Force Satellite Control Network (AFSCN). The major elements of the system are: (1) the GLT, (2) spacecraft L-band antenna for reception of GPS satellite signals, (3) spacecraft S-band antenna for reception of command uplink and transmission of GLT downlink, and (4) one or more ground stations including optional ground-based GPS receivers for differential navigation. Existing GPS satellite signals are utilized in real time by the system.

The GLT comprises a NASA STDN/Deep Space Network (DSN), USAF/AFSCN, or GLT command-format (GLT-CF) compatible command receiver/detector, a 20-Mbps-capable pulse code modulation/phase shift keying (PCM/PSK) telemetry transmitter with a selectable-rate forward error correction (FEC) encoder and optional embedded encryptor, and a dual-mode spacecraft-positioning subsystem including a GPS receiver and/or GPS transdigitizer. By combining command, telemetry, and positioning functions into one subsystem, overall spacecraft assets are conserved because resources (DC/DC power converters, local oscillator signals, small signal and power amplifier circuits, chassis mounting deck space and weight, cable harnesses, connectors, etc.) are shared. Losses due to inefficiencies in circuits are incurred

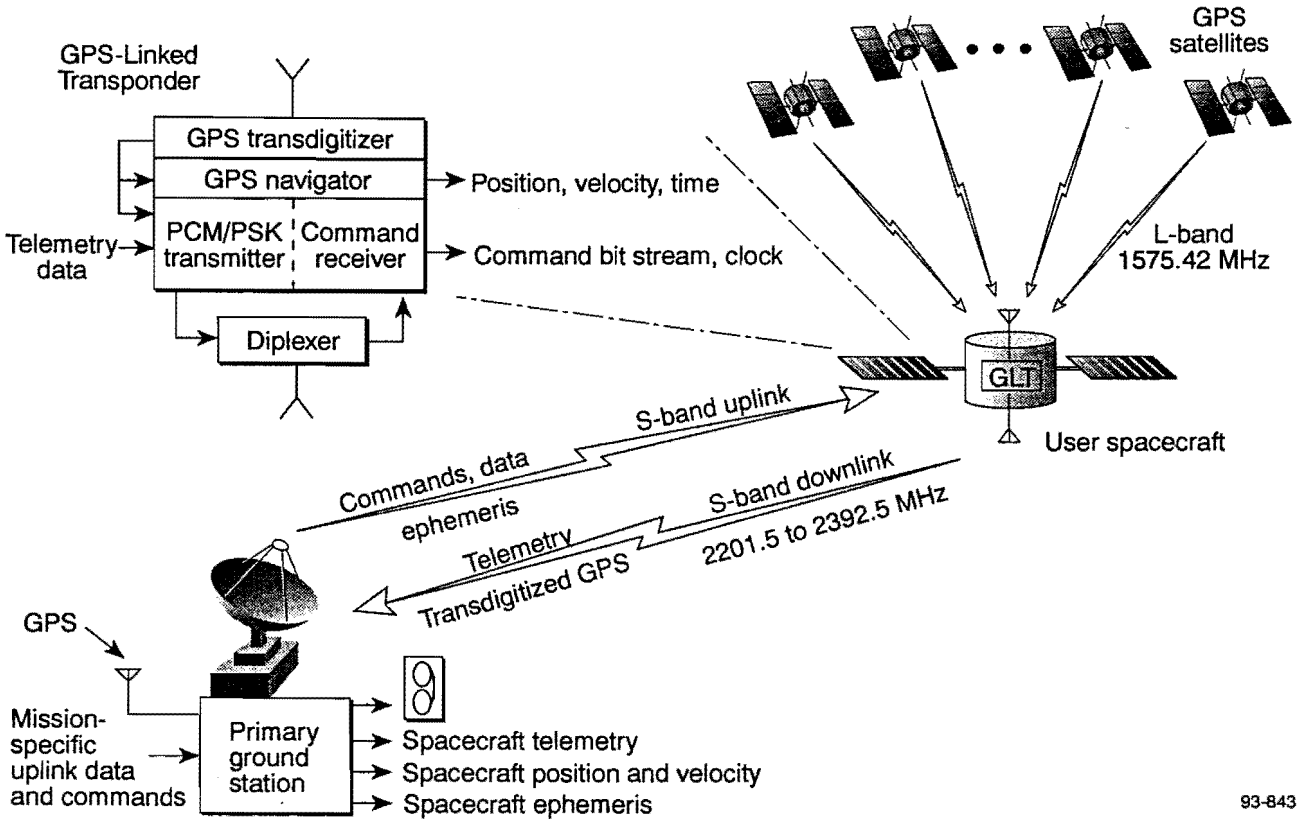

Fig. 1. The GPS-Linked Transponder (GLT) Command, Telemetry, and Positioning System in the dual-mode positioning configuration (autonomous real-time navigation using an onboard GPS navigator and near-real-time ground-based navigation using the GLT S-band downlink signal). For STDN, frequency of S-band uplink = 2025 to 2117 MHz; for SGLS, 1760 to 1840 MHz.

only once, thereby saving the valuable resources of the small satellite. With the mass and size of "overhead" systems (e.g., communications and navigation) conserved, the primary objectives of the mission can be more easily and efficiently met, or those objectives can be expanded for the overall benefit of the program.

The primary benefits of this system include significantly increased uplink and downlink data rates; simplified mission operations; and, while in the transdigitizer-only configuration, significant mass and size reduction for a major spacecraft subsystem. High-accuracy orbit predictions and measurements are made on the ground, thereby minimizing the hardware functions required onboard the spacecraft. In the transdigitizer-only mode, mass is reduced from ≈ 7 to < 1 lbm, and size from ≈300 to < 30 in.^{3} relative to today's standard transponders. As space-qualified GPS receiver technology matures, similar mass and size savings will likewise be realized in the full receiver configuration. Downlink data rates can be increased from the typical 1 to 3 Mbps rates to 20 Mbps with a built-in and selectable-rate 1/2, 3/4, or 7/8 convolutional encoder and optional data encryptor. Standard uplink command data rates and structures (NASA STDN or AFSCN SGLS) are supported, but if desired, uplink command and data rates can be increased to greater than 1 Mbps using the GLT-CF. Such increases are achievable because with the GLT system, compatibility with signal structures designed for ranging code transmission is no longer required. Instead, modulation schemes are employed that are designed for data transmission and that promote streamlined spacecraft hardware. Mission operations are greatly simplified and costs dramatically reduced because planning, scheduling, and use of in-orbit and ground-based coherent ranging systems are not needed. High-accuracy orbits can be predicted or calculated, capitalizing on GPS positioning techniques.

GLT Positioning Methods

The complexities and costs of mission operations are reduced as a result of the way the GLT positioning function is implemented. Rather than ground stations and/or TDRSS satellites transmitting a high-power spread-spectrum or tonal ranging signal to be received, detected, and coherently retransmitted by the spacecraft's transponder, the GLT receives the existing and continuously available signals transmitted by satellites in the GPS constellation. Therefore, no ranging operations have to be scheduled for ground stations or for the TDRSS. The GPS signals, which are code-division multiplexed in a frequency spectrum common to all satellites, are

transdigitized (received, filtered, amplified, and digitized) by the GLT, thus creating a single bit stream. Then, depending on the mode of operation implemented, the resultant bit stream is either processed onboard by a GPS tracker/navigator or transmitted to the ground along with the spacecraft telemetry data via a special type of quadraphase-shift-keyed modulation of the downlink carrier. In the latter case, ground-based systems recover the transdigitized GPS signals and generate the spacecraft position and velocity in near-real time. Single- or multiple-pass data sets can be extrapolated to generate satellite ephemeris data. The GLT-derived position data can be used exactly as two-way Doppler-derived position data are now used: in real time by ground users, they can be logged for later correlation with sensor/instrument data, or they can be immediately uplinked to the spacecraft for use onboard.

A principal advantage to the use of GPS for orbit determination comes from the fact that the GPS constellation provides users with multilink observability, providing geometric "strength" to the position determination processing. This fact is exploited when using either full GPS receivers or transidigitizers, even when only one ground station is processing transdigitized data. Thus accurate orbit solutions can be obtained from relatively short-arc observations of the user satellite being tracked. Long data collection intervals from multiple ground-based tracking stations, typically required with two-way Doppler tracking methods, are not necessary.

As is the case for any GPS navigation system, position, velocity, spacecraft time, and orbital ephemeris data can be provided at several levels of accuracy. The GPS Standard Positioning Service (SPS), which is available to all users, provides signals and data that allow the accuracy of the users' navigation solutions to be controlled by operators at the GPS Master Control Station (MCS) to any level between 15 and 500 m, SEP (spherical error probable). This degradation to accuracy is achieved via the selective availability (SA) feature in which the signals and data are intentionally modified so as to degrade the accuracy of the users' navigation solutions to the level selected by the MCS controllers. Authorized users are able to employ the GPS Precise Positioning Service (PPS) in which encrypted information in the GPS message data can be applied to undo the effects of the SA modifications and thereby maintain an accuracy level of approximately 15 m, SEP. The accuracy of both positioning methods, particularly the SPS, can also be improved through special tracking and data processing procedures. One very effective method is differential processing whereby a ground-based reference receiver, using a surveyed receiving antenna, tracks and processes signals from the same GPS satellites being used to navigate the GLT-equipped satellite. Since many of the error sources (including SA-induced error sources) affecting GPS measurements are highly correlated over fairly large baselines, the data produced by the reference receiver can be used to compute corrections for the data obtained through the GLT, thereby improving the accuracy of the position/orbit estimates for the host vehicle. Alternately, the ground-based GPS receiver operating on the GLT-transdigitized data stream can be PPS-compatible. Cryptovariable key changing and similar PPS-related procedures are accomplished more easily on the ground than in orbit. Other improvements are possible through the use of long arc or multi-orbit processing and kinematic positioning techniques. These GPS processing techniques are well developed and understood and can be implemented in ground stations using systems based on existing hardware and software developed and operating at APL and other locations.

Combined GPS Receiver/Transdigitizer Positioning Configuration

When configured with an embedded GPS receiver (option 'a' in Fig. 2), the GLT provides fully autonomous positioning and time recovery. This configuration (when used with ground-network receivers for differential GPS operation) provides the most accurate positioning capability. Standard GPS receiver and navigation control software would be implemented.[12, 15] In this configuration, the transdigitizer output feeds the GPS signal tracking and navigation hardware, thereby eliminating redundancy for the RF section of the receiver and saving mass, size, and power for this function. The transdigitizer then provides backup and graceful degradation functionality without measurable impact on the spacecraft hardware except for transmission of the bits to the ground, shown later in this paper to be of minimal consequence.

GPS Transdigitizer-Only Positioning Configuration

Use of the transdigitizer-only configuration (Fig. 2 without option 'a') has several unique advantages. In this configuration, the spacecraft position is computed on the ground rather than on the spacecraft. The configuration provides the highest system reliability, significant GPS-processing flexibility, and minimum size, mass, cost, and complexity of the flight hardware. Position and velocity of the spacecraft are computed within seconds of ground data reception, and accurate spacecraft orbital ephemeris elements are computed before the end of one pass over a single ground station. The ephemeris can be uplinked to the spacecraft for use by an onboard orbit propagator, optionally embedded within the GLT (option 'b' in Fig. 2). In this configuration, ground-computed ephemeris data are internally and automatically extracted by the GLT's command detector subsystem from the uplinked command and data stream and are then fed to an internal orbit propagator microcontroller/timing circuit, which generates position, velocity, and time data and a hardware 1-pps signal. This function could be implemented in a low-throughput radiation-tolerant high-reliability microcontroller implemented in a single digital gate array with virtually no increase in GLT mass, size, and power. The ground station could easily be automated to compute the ephemeris data set and uplink it to the spacecraft at the end of each pass that data are collected, thereby emulating fully autonomous onboard navigation.

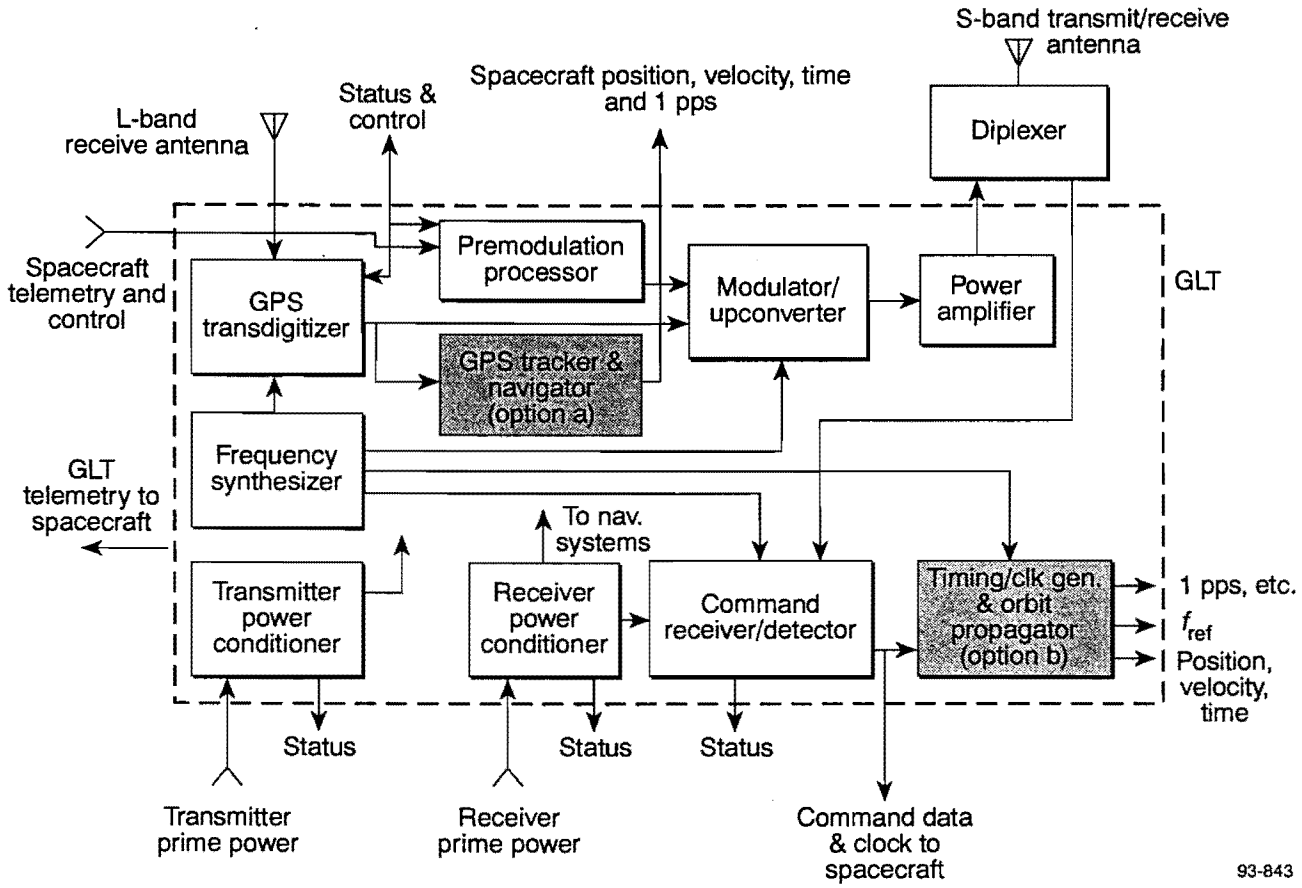

Fig. 2. Simplified block diagram of the GLT. When option 'a' is included, the system has full onboard tracking and navigation capability plus backup ground-based support (dual-mode positioning configuration). When option 'b' is included, an onboard orbit propagator and timing/clock generator provide the same functionality as the onboard receiver/navigator (using uplinked ephemeris and clock data provided by the ground tracking station(s)).

Functional Description of the GLT and Supporting Spacecraft Hardware

The space segment hardware consists of four functional elements: GLT, L-band receive antenna, S-band transmit/receive antenna, and diplexer.

GPS-Linked Transponder

Like a standard transponder, the GLT is a composite system incorporating three major elements or subsystems: a command receiver/detector, a telemetry transmitter, and hardware to allow ground-based systems to determine spacecraft position and orbit information. The GLT is a new instrument that would be developed as a follow-on to several earlier designs developed at APL. Although the design baselines STDN and SGLS compatability, minor modifications could also make the GLT compatible with the TDRSS. However, the initial GLT concept is compatible with terrestrial systems to address the needs of small satellites. High functionality, yet very small size (less than 30 in.^{3}) and mass (less than 1 lbm) as well as low parts count, reduced complexity, and low power dissipation are distinguishing characteristics of the GLT.

The GLT comprises eight subsystems: GPS transdigitizer, premodulation processor, modulator/upconverter, power amplifier, frequency synthesizer, command receiver/detector, and transmitter and receiver power conditioners. Two different optional configurations include a ninth subsystem: one incorporates a GPS tracker and navigator (option 'a' in Fig. 2), whereas the other incorporates a timing/clock generator and orbit propagator (option 'b' in Fig. 2). Table 1 lists the GLT preliminary system specifications. The functional operation of the GLT is summarized in what follows.

The first of three primary functions of the GLT is that of a command receiver/detector. The command receiver accepts uplink command signals from the S-band diplexer via the transmit/receive antenna. Any channel in the standard STDN or SGLS command uplink band can be selected for use at time of manufacture. Of the two, the STDN command structure is the most difficult to process, and a preliminary design for an STDN receiver will be described. With this design, a dual-heterodyne downconverter outputs the selected channel to a phase demodulator, which recovers the 16-kHz subcarrier containing the PCM/BPSK (biphase shift keying) data. A command detector demodulates the subcarrier, bit synchro-

Table 1. GPS-Linked Transdigitizer Preliminary Specifications.

Parameters	Specifications
Primary functions	GPS transdigitizer; telemetry transmitter; command receiver/detector compatible with STDN/DSN, SGLS, or GLT-CF signal structures
RF output power	Options from 1 to 10 W
RF output frequency	2207.5 to 2392.5 MHz, selectable in 5-MHz steps
Spectrum characteristics	Output spectrum is IRIG-106-86-compatible
Telemetry data rate	≤20 Mbps
GPS transdigitizer	3 options: L1 C/A code, L1/L2 narrowband, L1/L2 wideband
GPS sample/data rate	Function of transdigitizer option selected; option 1 not sampled
Modulation	Transdigitizer option 1: UA-QPSK (telemetry = I; GPS = Q); GPS not sampled
	Transdigitizer options 2 & 3: U/QPSK, GPS sampled and L1/L2 interleaved on Q
	For band-limited applications: trellis-coded modulation (TCM)
I/Q power ratio (for U/QPSK)	6 dB
Signal processing	Differentially encoded (NRZ-L to NRZ-M), optional encryption via KG-46, FEC
FEC	Rate 1/2, 3/4, 7/8 selectable; PLL provided for symbol-rate clock generator
Encryption	Optional; KG-46 algorithm
Command receiver (STDN)	2025 to 2117 MHz; PM demodulator, BPSK command detector and bit sync, ≤2 kbps
Command receiver (SGLS)	1760 to 1840 MHz; FSK demodulator and command detector; AM bit sync, ≤2 kbps
Command receiver (GLT-CF)	2025 to 2117 MHz; ≤1-Mbps FSK noncoherent demodulator and bit sync (prelim.)
Primary input power	+28 (±7) Vdc
Power dissipation	<20 W for 1-W output power option
Mechanical outline	4" × 5" × 1.5" (30 in.^{3}); Goal: 2" × 3" × 1.5" (9 in.^{3})
Mass	<1 lbm; Goal: <0.6 lbm
Thermal	−10°C to +55°C, conduction-cooled, extended operation in vacuum

nizes to the data, and, if the data are differentially encoded, converts them from non-return-to-zero mark (NRZ-M) to NRZ level (NRZ-L) and outputs the command bit stream and clock to the spacecraft.

Optional GLT-CF channel specifications are being developed whereby the command channel is, by choice, no longer STDN- or SGLS-compatible. Significant advantages can be achieved because the GLT system design permits removal of the typical coherent receiver requirement that exists for the benefit of the ranging and two-way Doppler functions of the standard transponders. The new GLT-CF channel permits higher uplink command and data rates, in the megabits-per-second range, for more efficient software uploads and other possible advantages. A noncoherent command receiver/detector will be specified, resulting in smaller, lighter, simpler, less expensive, and higher-reliability flight hardware. The feasibility of a fully digital demodulator and command detector design is also under investigation. Such a design would present simplified symbol and data rate switching and other obvious advantages inherent when digital components replace analog circuits.

The second function of the GLT is that of a telemetry data transmitter. This function is performed by receiving the telemetry bit stream from the host satellite's pulse code modulation encoder and processing the data with an optional encryptor and differential encoder. Variable-rate FEC encoding is also provided. The resultant bit stream is then transmitted to the ground station(s) via an S-band RF digital data link through the S-band diplexer/antenna system.

The third function is that of a GPS transdigitizer, which can operate in one of three modes: L1 clear acquisition (C/A) code, L1/L2 narrowband, and L1/L2 wideband. The L1 C/A mode function is implemented by receiving GPS L1 C/A code signals via an L-band microstrip antenna system and downconverting these signals to near-baseband. The baseband signal is hard-limited, optionally sampled, processed like the telemetry data (optionally encrypted and encoded), and also transmitted to the ground station(s) via the same S-band RF data link as the telemetry data. For the L1 C/A mode, the signal is not sampled and is therefore asynchronous with the telemetry data. For the dual-frequency modes, each signal is sampled, and the two products are interleaved to create one bit stream for transmission.

A frequency synthesizer generates the local oscillator signals required by the GPS transdigitizer, the command receiver/detector, and the modulator/upconverter. The frequency synthesizer includes a fundamental crystal oscillator and two phase-locked loop (PLL) synthesizers. This setup

enables selection of the GLT output frequency from 2207.5 to 2392.5 MHz. To minimize size, mass, and power dissipation, the frequency plan is devised so that the command receiver, telemetry transmitter, and GPS downconverter share the same local oscillator signals whenever possible.

The receiver and transmitter power conditioners accept primary power from the spacecraft at 28 (±7) Vdc. Each power conditioner reduces this value to a lower voltage with a DC/DC converter and conditions the voltage via linear regulators for use by the command receiver, GPS transdigitizer, and transmitter electronics. Power-on and power-off sequencing are provided to ensure reliable operation of the GLT's gallium arsenide field-effect transistor devices.

GLT Antenna and Diplexer System

The GLT will receive the GPS signals from an L-band receive antenna with hemispherical coverage pointing toward the local zenith. GLT downlink signals will be transmitted and uplink command signals will be received by an S-band transmit/receive antenna with hemispherical or spherical coverage pointing toward Earth. Typical configurations for both antennas include the bifilar helix and the microstrip patch. Typical achievable antenna gains are > -6 dBic for all elevations $> 10°$ and > -2 dBic for all elevations $> 30°$ relative to the ground plane of each antenna.

An S-band antenna diplexer is provided as an integral part of the system. The GLT S-band downlink signal is received and passed through a band-reject filter with a notch at the command receive frequency. The circulator routes this output signal to the S-band antenna. The command uplink signal is received from the S-band antenna and is routed to a bandpass filter by the circulator. The bandpass filter is tuned to the command receive channel selected for the mission. A miniature design, perhaps integral to the GLT, is feasible using ceramic filter technology.

GLT Downlink Signal Structure

The GLT's downlink signal structure is unique. For the two RF data links supported, considerably different requirements exist. For typical applications, the telemetry channel is the higher data rate channel with a postdecryption bit-error-rate (BER) requirement of 10^{-6}, whereas the GPS transdigitizer channel must transmit only ≈2 Mbps (in the L1 mode) with an equivalent BER requirement of 10^{-3}. To optimally satisfy the different sets of requirements for this configuration, a modulation scheme called unbalanced asynchronous quadrature-phase shift keying (UA-QPSK) is used, wherein the telemetry data modulate the in-phase or "I" channel of a QPSK modulator, while the GPS data modulate an attenuated quadrature-phase or "Q" channel. The resultant signal has an I/Q power ratio of 6 dB, and the "penalty" to the telemetry link due to the presence of the GPS data link is only 1 dB. The modulator block diagram and the output spectrum are shown in Figure 3. For higher data rate transdigitizers working with both L1 and L2, trellis-coded modulation may be more practical, depending on transmission bandwidth considerations. The optimal design considering bandwidth and power efficiency is very application-specific and complex and thus beyond the scope of this paper. L1 C/A code transdigitizers will be the baseline configuration for the discussion to follow. In this mode, the GPS data are not sampled, and therefore BER has no meaning. However, the concept can still be used to qualitatively describe channel performance.

The UA-QPSK modulation scheme is uniquely well-suited for the GLT application. It enables concurrent transmission of two different data streams on a single downlink and allows the ground-system demodulator to unambiguously separate the I/Q signals. It permits standard ground-station telemetry receivers with BPSK demodulators to recover spacecraft telemetry data while the GLT concurrently transmits GPS-transdigitized data. In addition, the scheme allows sharing of resources like the mechanical package, internal power conditioners, oscillator, frequency synthesizers, amplifiers, etc., thereby providing a combined system that is smaller and lighter than the sum of two separate systems. Finally, it facilitates the optimal sharing of transmitter power between the two links. It can be seen that the GPS transdigitizer function comes very nearly "free" to the host vehicle as measured by size, mass, and prime power relative to what is required for the telemetry transmitter function alone.

Application to Small Satellites

The weight and size reductions of a major spacecraft subsystem, as described in this paper, are obvious reasons why the GLT has application to small satellite programs. Second-order effects are also realizable and significant, as mounting space, spacecraft structure, cable harness, and connectors are reduced. However, cost reductions in ground operations may be an even more significant advantage. Small satellite programs typically rely on NASA and Air Force institutional services to obtain orbit data. Moreover, there is serious consideration to requiring that the funds needed to operate a spacecraft be included from the beginning in the budgets of individual programs. The reason for this is obvious, and implementing the idea is long overdue: NASA requested over $625 million for mission operations and data analysis for 1994, and it is estimated that the Air Force Space Command typically expends similar amounts for SGLS transponder-based mission operations and data analysis. If operational costs were to be shifted to individual programs and if new techniques are not employed, these factors will weigh heavily on small satellite programs that now rely on institutional NASA and SGLS systems for tracking, positioning, telemetry recovery, and commanding. Typically, the budgets for these programs are below $50 million over their life, and the bill for three years of operational costs could become a significant percent of the total program cost.

The concept of highly integrated systems promoted by the GLT can be extended even further. Subsystems to provide command and data handling (C&DH) as well as attitude

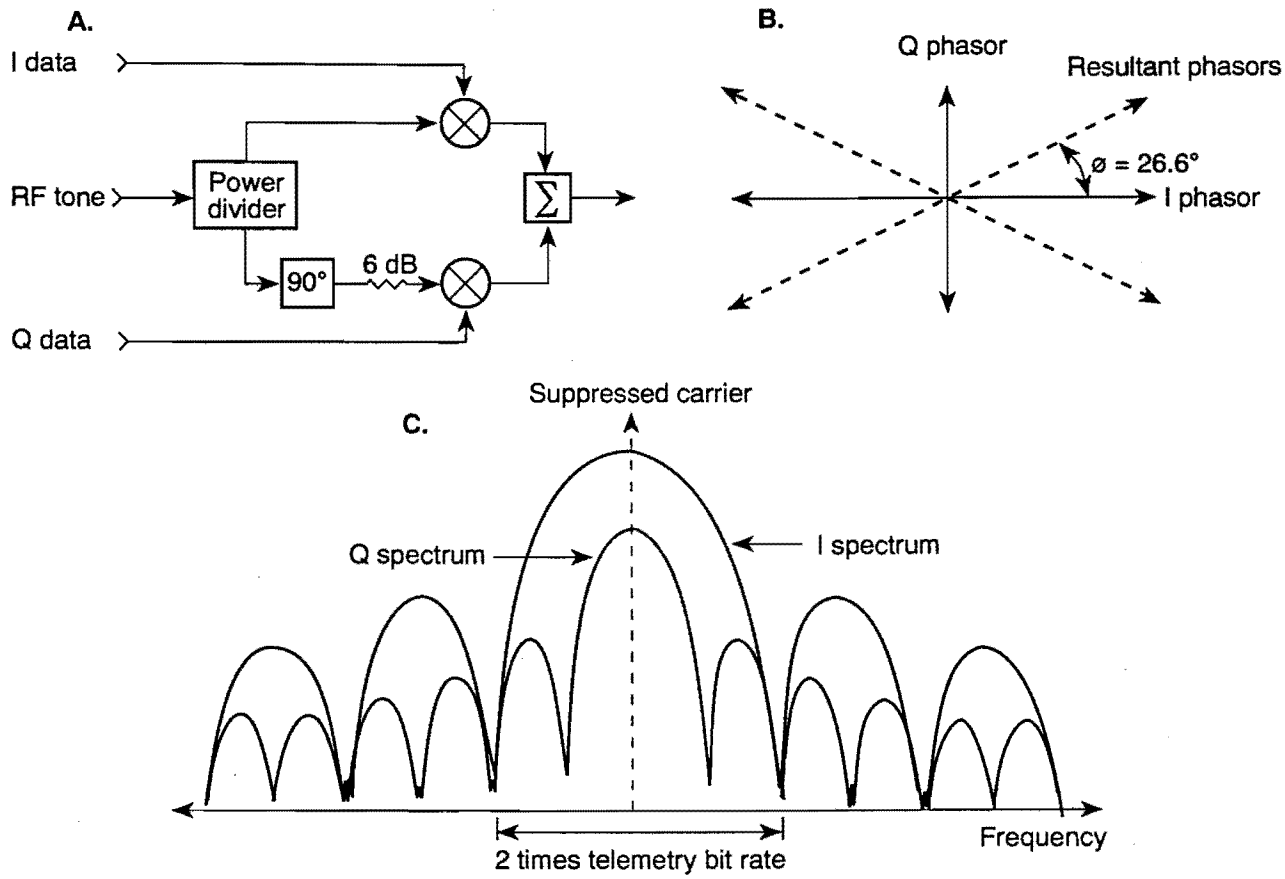

Fig. 3. Implementation and characteristics of the UO-QPSK modulators. A. Block diagram. B. Phasor diagram. C. Spectrum.

measurement and control functions can be integrated into the GLT, further reducing the weight and size overhead of small satellite systems. The feasibility of providing extended capability with the GLT, beyond the nominal configuration described in this paper, is being explored with a government sponsor.

Ground Station Description

The GLT ground system can take on one of five different configurations: single-station stand-alone, single-station differential, multiple-station stand-alone, multiple-station differential, and high-precision postevent processing. Accuracy predictions for each configuration are currently being analyzed and will be presented in a forthcoming paper at the ION GPS-93 International Technical Meeting.

The distinctions between the different ground-station operating modes are illustrated in Figures 4 through 7. In Figure 4, the signal and data flow paths for the most basic ground system are shown. In this single-station stand-alone configuration, moderate positioning and orbital ephemeris accuracies are achievable. The 1-bit quantized baseband data generated by the GPS transdigitizer in the GLT and modulated onto the Q channel of its QPSK modulator are recovered by the U-QPSK demodulator, along with the reconstructed carrier signal. These signals are passed on to the GPS downconverter/timing unit, where the reconstructed carrier is downconverted to baseband. The reconstructed carrier and the Q output of the demodulator are sampled and passed on to the GPS navigation system (as well as being stored on digital magnetic tape if desired). The navigation system contains a standard GPS tracking and navigation system with sufficient Doppler and Doppler-rate dynamic range to track the satellite-motion-induced Doppler effects. The system locks on to the GPS L1 C/A signals (or L1 and L2 P-code signals) received by the GLT L-band antenna and generates range and Doppler measurements for the GPS satellites being tracked. The range and Doppler measurements are then processed with a Kalman filter to generate the position, velocity, and orbital ephemeris estimates. At least four satellites are necessary to produce usable tracking results, but five or six are highly recommended to produce results that are consistently of high quality. No additional equipment in the satellite-borne GLT is needed to be able to track additional satellites; tracking is totally determined by the ground processing stations. The GLT processes all GPS signals visible to it.

Substantial improvement in accuracy can be achieved by adding a differential GPS ground processing capability as shown in Figure 5. This is the baseline configuration for the GLT system, since so much is gained in system performance for so little additional ground-station equipment. Here, a GPS reference receiver is added, which receives signals directly

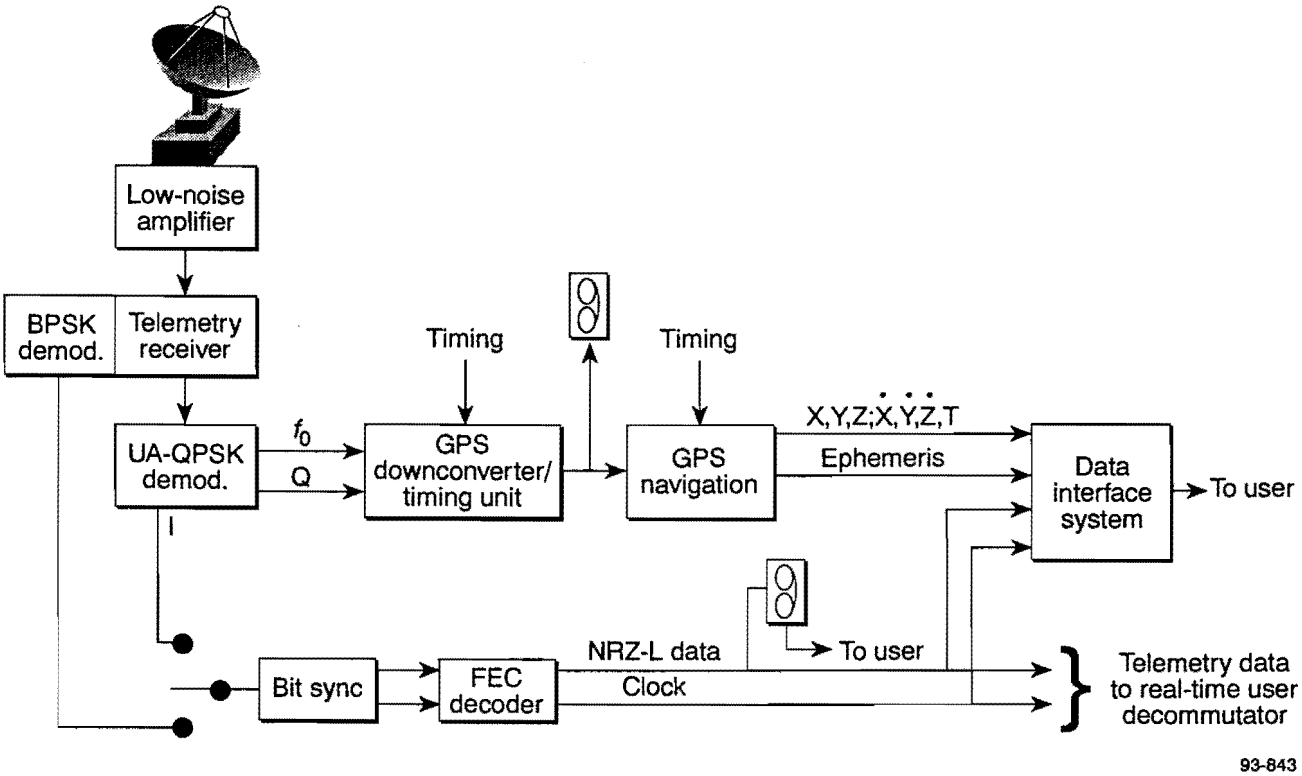

Fig. 4. Single-station stand-alone configuration of the GLT ground system for moderate-accuracy positioning applications.

from the GPS satellites through a precisely surveyed receiving antenna. The tracking data from this receiver enable the systematic error sources in the GPS measurements, which are highly correlated over the relatively short baseline between the tracking station and the satellite being tracked, to be calibrated and thereby removed from the data being sent to the Kalman filter orbit estimator. The expected accuracy for this single-station differential mode is 2 to 5 m, SEP, for a short-arc solution, even with large SA-induce system offsets.

System accuracy, in either stand-alone or differential configurations, can be improved by processing data from multiple receive stations, thereby achieving observability of a greater portion of the satellite orbit. The multiple-station differential configuration is shown in Figure 6. The processed data are sent from the "remote" stations to the primary ground station for integrated orbit determination processing via modem or a satellite communications channel. If the selected site is not equipped with a precision frequency reference system, the GLT ground-station system will include a GPS timing receiver with a GPS-controlled disciplined reference oscillator to generate the required timing signals. Existing NASA ground reference stations exist that are used for the TOPEX and similar missions for differential correction of GPS-based navigation data. The GLT system would be compatible with those data sets. The logical location of the GLT ground stations for this high-precision operating mode would be these TOPEX reference stations. Existing equipment, with small or no modifications, could probably be used in the mode described here.

A final level of improvement can be achieved by reprocessing all the data tapes recorded at the tracking station(s) in the Post-Flight Processing Center established at APL for accuracy analysis of the Navy's Trident missile system. In this high-precision postevent processing mode, shown in Figure 7, accuracy improvements are achieved by optimal tracking of the GPS signals, improved modeling of the GPS error sources (particularly the ionospheric errors), and the use of improved GPS ephemeris estimates (posttest smoothed estimates rather than real-time predicted estimates obtained from the GPS message data). The accuracy achievable under this scenario, over the observation arc, is estimated to be in the 1- to 15-ft range, depending on whether a single- or dual-frequency transdigitizer is employed, the altitude of the satellite, and the total electron content of the ionosphere at the time. Potential uses for this method include special experiments that may required high-precision position data over a short arc of an orbit.

The GLT-transmitted signal structure is such that standard ground stations throughout the world (i.e., not only NASA STDN or AFSCN SGLS stations) that employ standard BPSK demodulators and receiver IF frequencies of 20 MHz can recover GLT-transmitted data for data rates at or below 6 Mbps if FEC is disabled, and for data rates at or below 3 Mbps if FEC is enabled. For higher data rates, sites employing other often-used receiver IF frequencies of 70 and 110 MHz can support the higher bandwidths associated with data rates up to 20 MHz. The telemetry receive site could be positioned anywhere adequate antenna resources are avail-

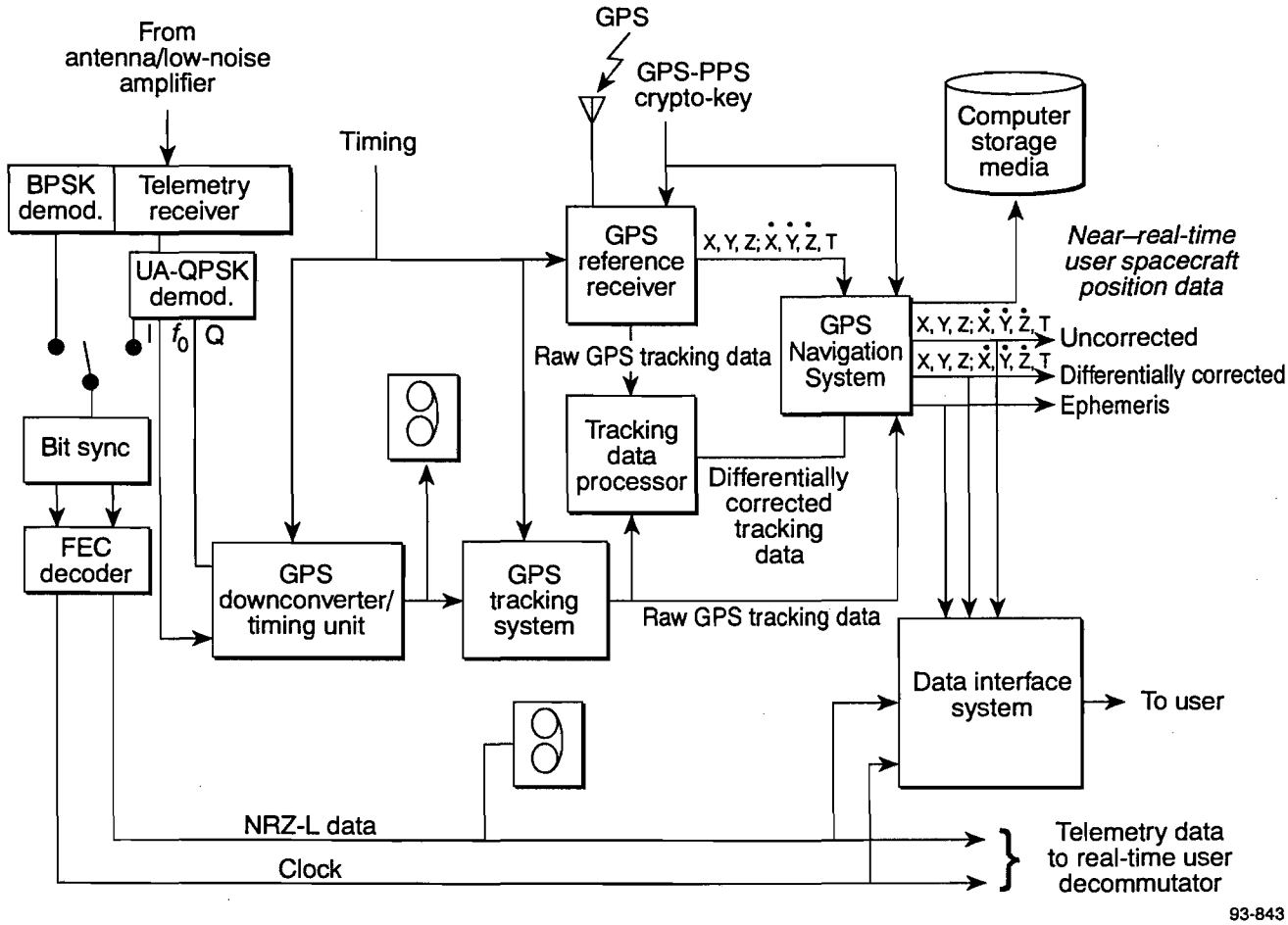

Fig. 5. Single-station differential GPS configuration of the GLT ground system for high-accuracy positioning applications.

able and in view of the spacecraft. This mode of operation of the GLT/Command, Telemetry, and Positioning System provides significant flexibility for telemetry recovery operations. The Applied Physics Laboratory is working with several potential sponsors that may have X-band requirements, and design options to support X-band transmission frequencies are being developed.

Conclusion

The salient features of the GLT Command, Telemetry, and Positioning System include the following:

- NASA/STDN- or AFSCN/SGLS-equivalent system
- Provides a logical path for use of GPS for satellite positioning
- Enables significant simplification of ground stations and reduction in mission operations costs
- Small size, low mass, low power
- Power-efficient phase modulation for transmitter
- High data rate telemetry transmitter (up to 20 Mbps)
- Embedded GPS transdigitizer
- Embedded COMSEC if required
- Built-in variable-rate FEC and differential encoder
- Signal structure enabling standard range hardware to recover telemetry data
- GPS-derived position and orbit data provided nearly "free" to host satellite

These features are especially significant for small satellite programs because they result in small, light-weight, simplified hardware elements that combine several functional capabilities into a single satellite-borne flight module. The system offers improved performance relative to present uplink command and downlink telemetry data rate capabilities. In addition, simplified, highly accurate and reliable determination of satellite position, velocity, and orbit parameters is provided through ground-based processing of the transdigitized GPS signals. Such processing can be accomplished at the telemetry receiving station and does not require a global tracking network or a large, centralized data processing facility. Very substantial cost savings to small satellite programs could be realized and could make the difference between an affordable program and one that is not. In addition, the system can potentially give command and control capability to the principal investigator of a small satellite program without having to establish complex and costly interfaces with the NASA STDN and/or AFSCN. Further integration of func-

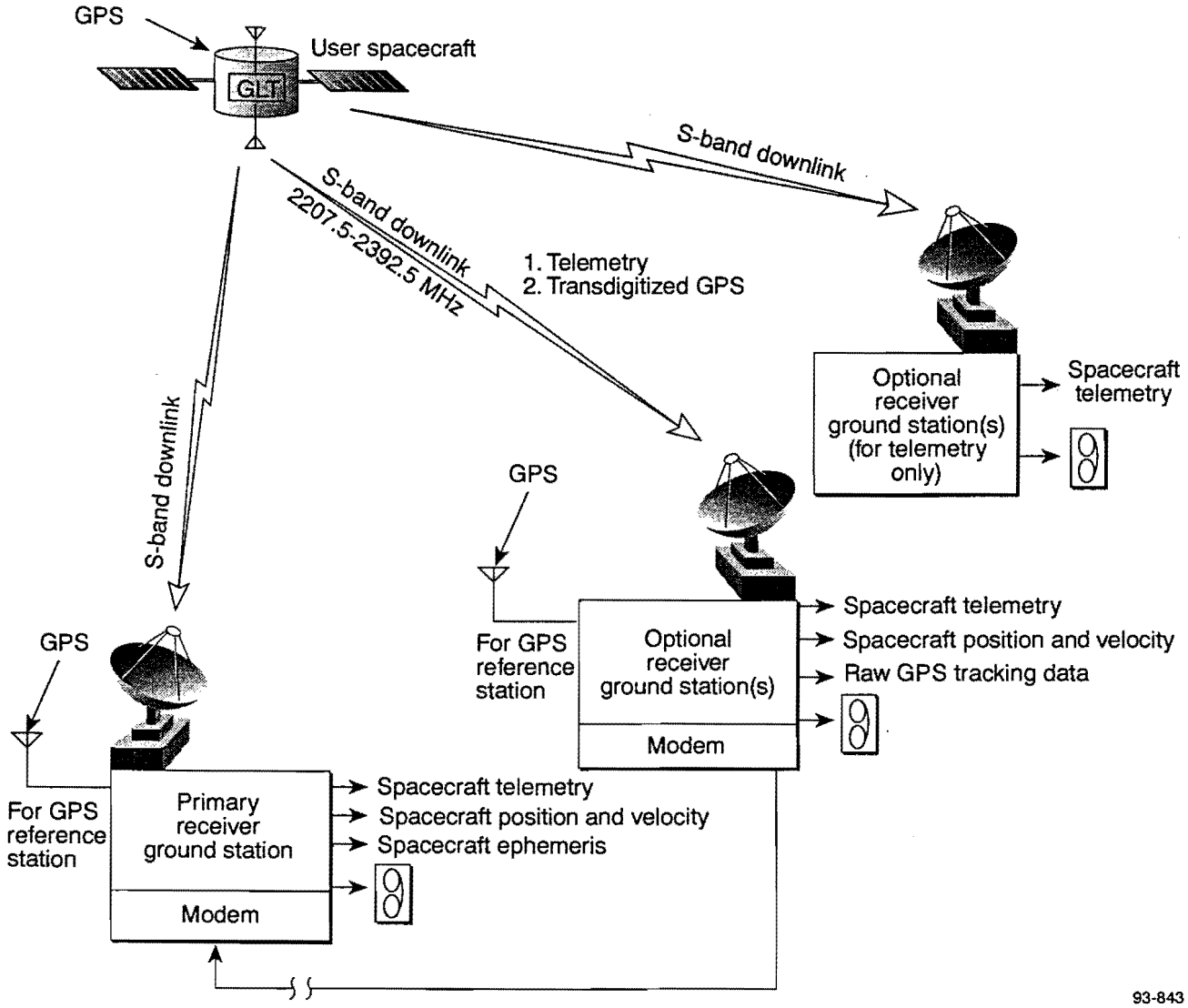

Fig. 6. Multiple-station differential GPS configuration of the GLT ground system for high-accuracy long-arc positioning applications.

tions, such as data encryption/decryption and C&DH, is possible to carry on the basic concept of shared, highly integrated systems that are needed to make small satellite programs possible. Patent applications for the GLT/Command, Telemetry, and Positioning System are pending.

References

[1]Dougherty, J. M. and Westerfield, E. E., "Post Flight Processing of GPS for ICBM Guidance Accuracy Evaluation," in *Proc. AIAA Missile Sciences Conf.*, Air Force Ballistic Missile Technology Session #10, Montery, CA (22-24 Feb 1993).

[2]Levy, L. J., "The Legacy of SATRACK (U)," *APL Tech. Rev.* 2(2) (1990).

[3]Westerfield, E. E. and Wall, J. G., Jr., "Satrack: A Satellite Instrumentation System for the Evaluation of Ballistic Missiles (U)," *APL Tech. Rev.* 2(2) (1990).

[4]Vetter, J. R., Schwenk, V. L., and Hattox, T. M., "An Improved GPS Based Tracking System for High Accuracy Trident II Missile Navigation and Guidance Evaluation," in *Proc. 4th Biennial Guidance Test Symp.*, Vol. III (Oct 1989).

[5]Duven, D. J., "Performance Experience of and Design Goals for the SATRACK I & II Missile Tracking Systems," in *Proc. 1st International Symp. on Positioning with GPS* (15-19 Apr 1985).

[6]Westerfield, E. E., "The Use of GPS for Determining the Position of Small Buoys," in *Proc. Symp. on Precise Positioning with the Global Positioning System* (Apr 1985).

[7]Warnke, L. L. and Westerfield, E. E., "Use of GPS for Determining Position of Drifting Buoys," in *Proc. IEEE National Telesystems Conf.* (Nov 1983).

[8]Devereux, W. S. et al., "The GPS/Telemetry Transmitter (GTT)—A Small GPS Transdigitizer and Telemetry Transmitter," AIAA Paper No. 93-2693, *2nd Annual AIAA SDIO Interceptor Technology Conf.* (Jun 1993).

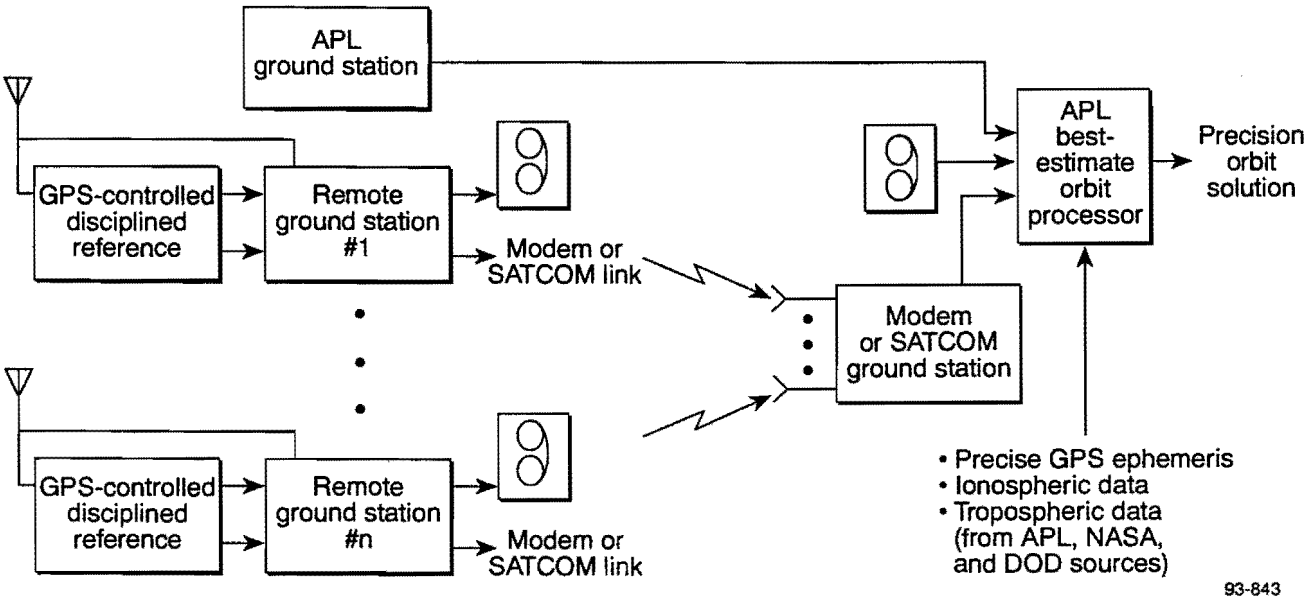

Fig. 7. High-precision postevent processing configuration of the GLT ground system for best-accuracy results using optimal data processing procedures.

[9]Duven, D. J. and Devereux, W. S., "Multisensor Miss Distance Measurement Systems for Test and Evaluation of High Speed Intercepts," in *49th Annual Mtg. ION* (Jun 1993).

[10]*SATRACK Analysis of Precision TRANSAT Test,* JHU/APL SDO-5419 (Jun 1980).

[11]Hoffman, E. J. and Birmingham, W. R., "GPSPAC: A Spaceborne GPS Navigation Set," in *Proc. IEEE Position Location and Navigation Symp.* (1978).

[12]Born, G. H., Stewart, R. H., and Yamarone, C. A., "TOPEX—A Space-Borne Ocean Observing System," in *Monitoring Earth's Ocean, Land, and Atmosphere from Space-Sensors, Systems, and Applications,* Schnapf, A. (Ed.), AIAA Inc., New York, pp. 464–479 (1985).

[13]LeFevre, D. K. and Mulally, D. J., "Tracking Small Satellites Using Translated GPS," in *Proc. 5th Annual Conf. on Small Satellites* (1991).

[14]Marth, P.C. and Stott, D. D., *Study of a Combined Command and Navigation System for User Spacecraft Employing TDRSS and GPS,* JHU/APL S2R-022 (1984).

[15]Wu, S. C., Yunck, T. P., and Hajj, G. A., "Toward Decimeter TOPEX Orbit Determination Using GPS," Paper AAS089-359, *AAS/AIAA Astrodynamics Specialist Conf.*, Stowe, VT (Aug 1987).