A LOW-COST SMALL SATELLITE SPACE RADAR SYSTEM

Bernard Raab, Consultant, Malibu Research, Calabasas, California
Dr. Robert O. Bartlett, Fairchild Space, Germantown, Maryland

Abstract

The advantages of space-based radar have been frequently noted for such applications as environmental monitoring, crop detection, soil-moisture determination, coastal ice measurement, and all-weather surveillance, to name just a few. The FLAPS™ ("Flat Parabolic Surface") antenna technology developed by Malibu Research, enables the conception of a small-satellite radar system. The design described in this paper is that of a lightweight surveillance satellite capable of being launched on a Pegasus booster. It is capable of detecting small ships and aircraft, such as may be required for drug-interdiction missions and other all-weather surveillance applications.

The FLAPS™ antenna has many of the features of a phased array antenna at a small fraction of the cost or mass ordinarily associated with phased arrays. Moreover, a FLAPS™ antenna can be folded or rolled and stowed in a variety of ways to enhance the possibility of fitting within the limited volume available in a small ELV. We describe approaches to packaging and deployment of such an antenna, and the mating of these assemblies to a Fairchild-developed small satellite, and to the Pegasus air-launched vehicle. The satellite features a fiber-optic data bus, and the integration of an on-board processor with a solid-state recorder, as has been provided to NASA for its recently-launched Small Explorer satellite.

1.0 INTRODUCTION

Until now, a small satellite radar system has been viewed as an unlikely combination. However, the advent of the FLAPS™ antenna technology, described in greater detail in a companion paper[1], makes such a system realizable. The radar system concept which is presented here is one which is highly suitable for limited-area surveillance, and one which illustrates the unusual capability of the unique FLAPS™ technology; i.e., the ability to construct a highly capable space radar within the confines of a small satellite, and launched on a Pegasus vehicle or other small ELV. It is expected that the radar electronics will be available "off-the-shelf" or close to it, and that no significant development is required for this part of the system. The uniqueness of this capability derives from the nature of the FLAPS™ antenna technology, in both mass and volume effectiveness, as well as its inherently low manufacturing cost.

2.0 Radar System Concept

The basic concept is to design a radar which can be operated in a push-broom mode, as illustrated in Figure 2.1. With such a beam configuration, the system

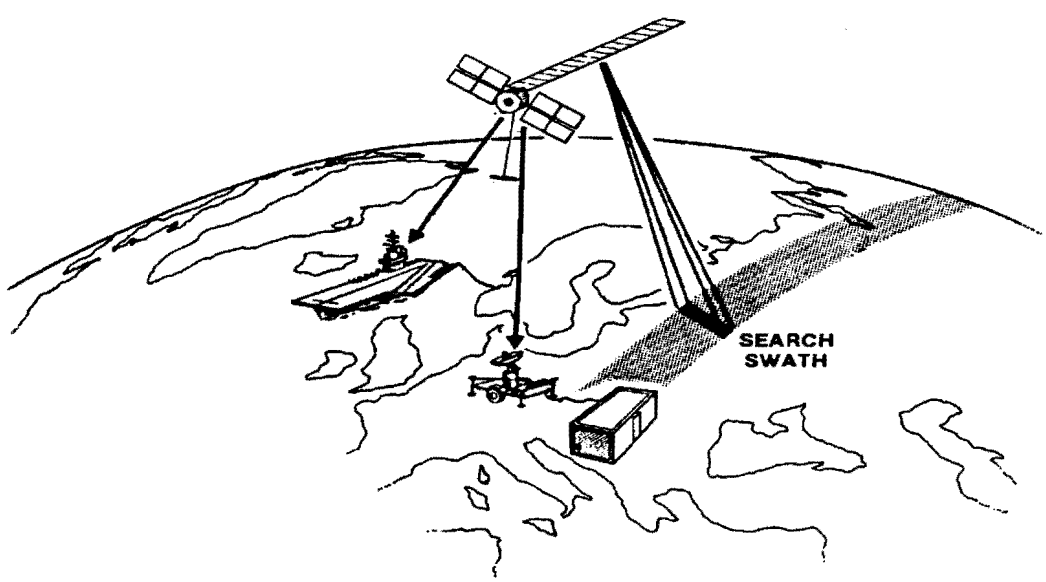

Figure 2.1 Space Radar System Concept

[1] A Unique New Antenna Technology For Small (and Large) Satellites, B. Raab, L.Sikora, Malibu Research, this conference

		SYNTHETIC APERTURE RADAR (SAR)				REAL-APERTURE RADAR (RAR)			
		INPUTS: RADAR CROSS-SECT.= 5 SQ.M., DETECTION PROPABILITY = 0.9 RESOLUTION = 1 M.(RANGE), 6 M.(AZ)				INPUT: RADAR CROSS-SEC.= 5 SQ.M DETECTION PROPABILITY = 0.9 RESOLUTION AS SHOWN			
ALT	FREQ	SWATH	ANTENNA	RF POWER		RANGE	RF POWER		DATA
		WIDTH	DIMS.	AVE.	PEAK	RESOL.	AVE.	PEAK	RATE
km.	band	km.	meters	watts	watts	meters	watts	watts	Mbps
500	X	150	12 X 0.113	28.2	3688	25	200	1365	29
500	L	160	12 X 0.704	4.8	670	50	244	1467	26
900	X	150	12 X 0.202	49.2	6432	35	653	4426	29
900	L	150	12 X 1.348	7.4	965	50	690	4145	26
		OUTPUT: DATA RATE = 560 MBPS (with BLOCK-ADAPTIVE QUANTIZATION)							

Table 2-1 Radar Parameters Study

can operate in either real-aperture or synthetic-aperture mode, switchable on command, or autonomously in response to a pre-selected set of conditions.

A series of radar system parameters has been derived for a variety of input assumptions by use of the RADARCALC™ software[2]. Table 2-1 highlights the key outputs of this software for the input conditions shown. (Appendix A reproduces the raw data of the RADARCALC™ output.) A basic input premise was the desire to cover a ground swath of approximately 150 km. in width. Satellite altitudes of 500 and 900 km were selected to envelope the low-altitude condition, and radar frequencies of X- and L-band were selected to envelope the frequencies of maximum interest. The antenna dimensions are sized by the requirements of the synthetic aperture operation, producing the RF power requirements shown in the table. Real-aperture characteristics are then determined for the same antenna. For the purpose of spacecraft size and cost, average power is a design driver. This led to the selection of the 500-km L-band system for further study. In order to further reduce average power in the real-aperture mode, target tracking was assumed for the transit period of roughly two beamwidths. This can be accomplished in principle by a modest frequency modulation whenever a target of potential interest crosses the beam. If the target is still deemed to be of interest, transition to synthetic-aperture operation is triggered, and only requires a change in the data processing. Pulses are then collected coherently, i.e., with phase information retained, and stored for immediate, or delayed, transmission to the ground. In general, this information is processed on the ground and high-resolution images are constructed.

Although the average radar power is significantly reduced during synthetic-aperture operation, the requirement for transmission of the much higher data rates results in a potential increase in transmitter power. However, as summarized in Section 4, orbit-average power is within the available satellite capability for the radar duty cycle which is postulated.

3.0 FLAPS Antenna Design

Features—As has been demonstrated by Malibu Research, it is possible to design a passive, geometrically flat surface, which behaves electromagnetically as though it were a parabolic reflector. The FLAPS™ consists of an array of dipoles (the dipole surface) positioned approximately 1/8th wavelength above a

[2] Copyright of User Systems, Inc., Vienna, Virginia

ground plane (the ground plane surface) as illustrated in Reference 1. Since dipoles of different lengths will produce a phase shift in the incident wave, arranging the distribution and the lengths of the dipoles will serve to steer, focus or shape the reflected wave. In a simple application, a parabolic surface can be directly replaced with a FLAPS™ as shown in Figure 3.1.

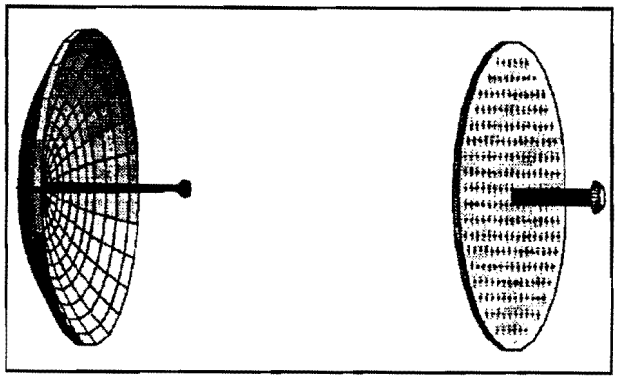

Figure 3.1 Conventional Parabolic and Comparable FLAPS™ Reflectors

It is possible to design a FLAPS™ as a substitute for any conventional reflector used in antenna design. As in a conventional reflector, a space feed provides the focal source or receiver of energy. Unlike a conventional reflector, however, a FLAPS™ can be configured in the 12-by-0.7-meter configuration required by the selected push-broom radar concept, as determined in Table 2-1.

Of critical importance in space applications, FLAPS™ is less massive than a conventional reflector of the same electrical size. Because a flat surface occupies less swept volume than a parabolic reflector, and may be folded or rolled up more regularly, a FLAPS™ antenna may be electrically larger for the same mass and volume than a conventional reflector, as is demonstrated below.

Design and Deployment Concepts—In concept, the same methods that are so well-developed for the packaging and deployment of large-area solar arrays can be applied to the packaging and deployment of the large FLAPS™ antennas. The two "traditional" approaches are: "fold-out" and "roll-out" arrays. These approaches leads to the requirements for either rigid or flexible FLAPS™ antennas.

A fabrication concept for a rigid design is shown in Figure 3.2. This is a multilayer sandwich built around a section of rigid polyimide foam, a space-compatible material with well-characterized properties. Since an L-band system is illustrated, the sandwich is some 1-inch thick. Despite this thickness, the mass estimate as shown on the figure is 0.1 kg/m²

A fabrication concept for a flexible antenna is built around a compressible version of the same polyimide foam, as shown in figure 3.3. In this design, the foam blocks are collapsible in a 12-to-1 ratio, allowing the copper-on-kapton facesheets to be collapsed and rolled

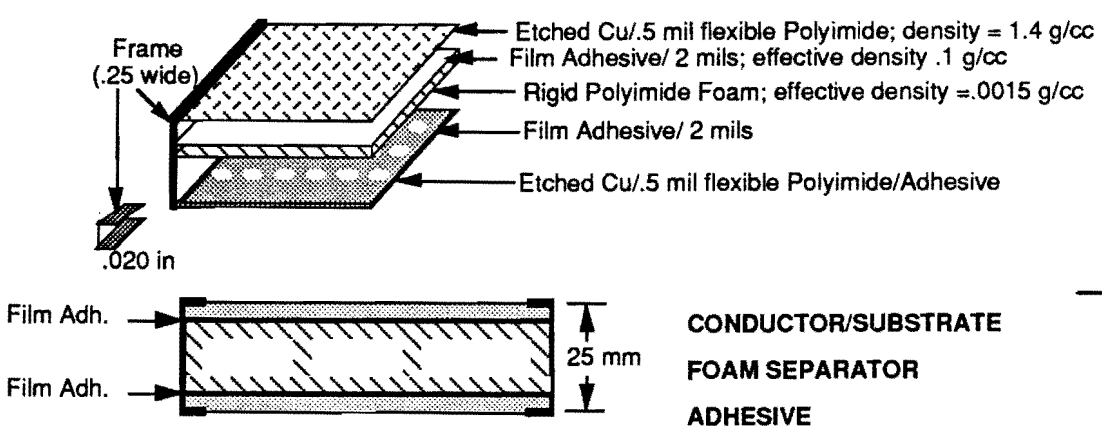

	GMS / M 2
CONDUCTOR/SUBSTRATE	31
FOAM SEPARATOR	37
ADHESIVE	10
FRAME	16
TOTAL	94

Notes
1. Film adhesive is 90% void/10% adhesive
2. Rigid foam is 85% void/15% foam
3. Frame is a thermoplastic of 1.5 g/cc (E.G.;VESPEL)

Figure 3.2 Rigid-Panel Antenna Concept

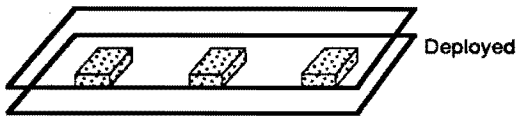

	GMS / M^2	
1-MIL KAPTON W. CU DEPOSIT	72	
COLLAPSIBLE POLYIMIDE (12:1)	45	(18% COVERAGE)
SM 73 (.03 psf) (Amer. Cyan. Co.)	9	
	126	

Figure 3.3 Flexible Antenna Concept

up or folded into a small volume. These facesheets are conservatively estimated to be 1-mil each in thickness, thus resulting in a slightly heavier system than the rigid design. In both cases, however, the mass of the antenna itself is minimal and the volumetric efficiency of the roll-up design may be its most significant aspect.

It should be noted that the "sandwich" thickness of approximately 1-inch is dictated by the L-band frequency of our initial selection (wavelength=20 cm.). Selection of a higher frequency (e.g. X-band, l=3 cm., would result in a sandwich thickness of ~0.1-inch in deployed form, and an even lighter and smaller package.

The packaging of the two designs within the Pegasus vehicle atop a Fairchild small satellite is shown in Figure 3.4, to meet the low-altitude L-band requirement selected from Table 2-1. The rigid antenna is

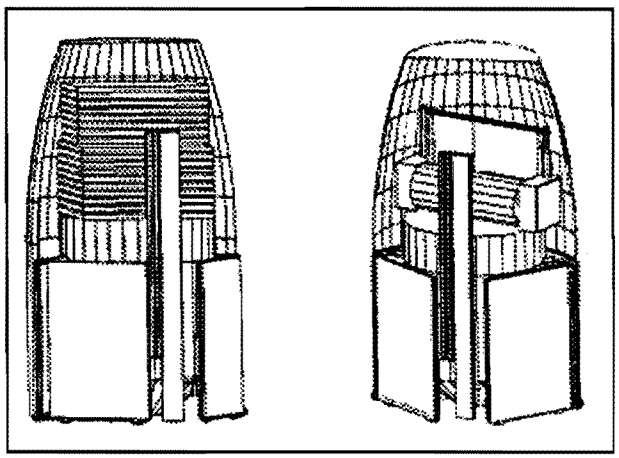

Figure 3.4 Rigid and Flexible Antennas Atop Fairchild Small Satellite In Pegasus Shroud

accordion-folded and is shown deployed in Figure 3.5. Two deployment mechanisms are suggested for the rigid design: The one shown in Figure 3.5 is based on the use of spring hinges which relax when the restraint

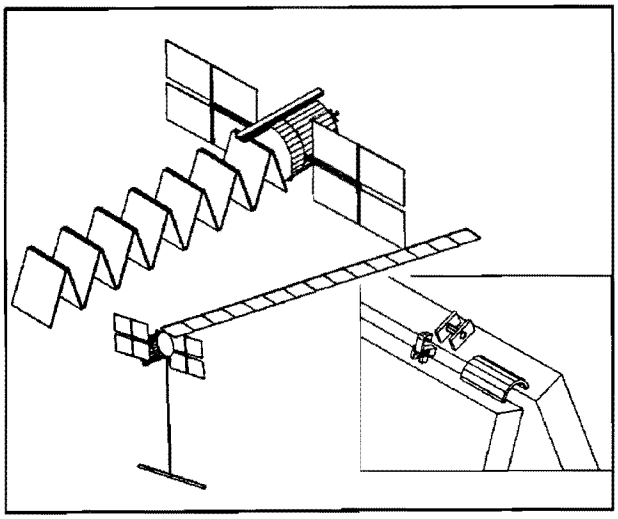

Figure 3.5 Flat-Panel FLAPS™ Deployed by Spring Hinges with Locking Mechanism

is removed. An overcenter latch engages as the deployment approaches completion and rigidly locks the panels in the open condition. A more positive type of deployment is shown in Figure 3.6, in which a Fairchild Tubular Extendable Element (TEE™) deployer is used to deploy and hold the panels.

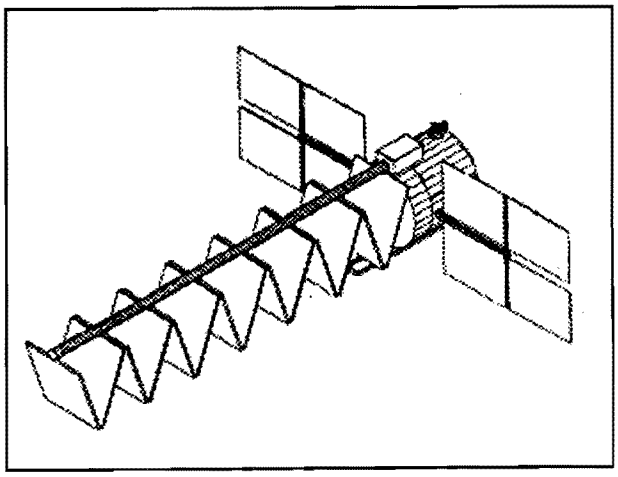

Figure 3.6 Rigid-Panel FLAPS™ Antenna Deployed by Tee™ Mechanism

Two TEE™ deployers are the mechanisms used to positively pull out the flexible antenna from its drum, as shown in Figure 3.7. These can be devised to provide

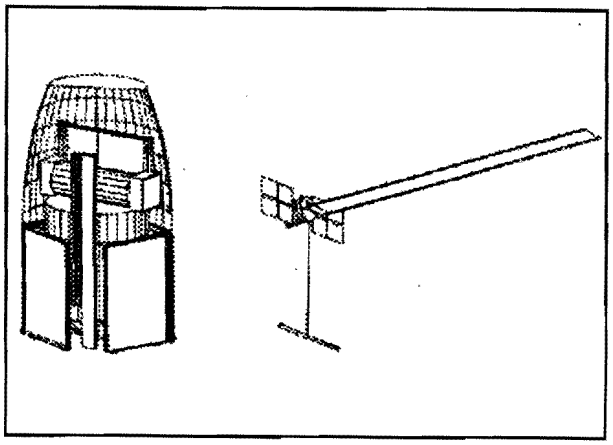

Figure 3.7 Flexible Roll-Out FLAPS™ Deployed by Tee™ Deployers

a positive spring force to the panel to hold the shape and to compensate for thermal expansion and relaxation.

4.0 SPACECRAFT DESIGN

Our design is predicated on the use of Fairchild's well-characterized small-satellite technology, typically design for payloads of 100-to-500 kg mass. All of the bus components are available off the shelf. The power and data subsystems, flight proven on the first NASA Small Explorer, SAMPEX (Solar Anomalous and Magnetospheric Particle Explorer), are operating successfully in orbit. Development is being funded either under Fairchild IR&D or under NASA or DoD contract.

The basic spacecraft approach is illustrated in Figure 4.1 in exploded view. Power is a key commodity in any satellite system, particularly in a small satellite. The spacecraft carries 3.6 m² of solar array and a 20 A-H battery, adequate for an orbit-average power of 250 watts. The spacecraft subsystems are described briefly below.

4.1 STRUCTURE AND THERMAL

The spacecraft structure is composed of aluminum bonded honeycomb sandwich material formed into

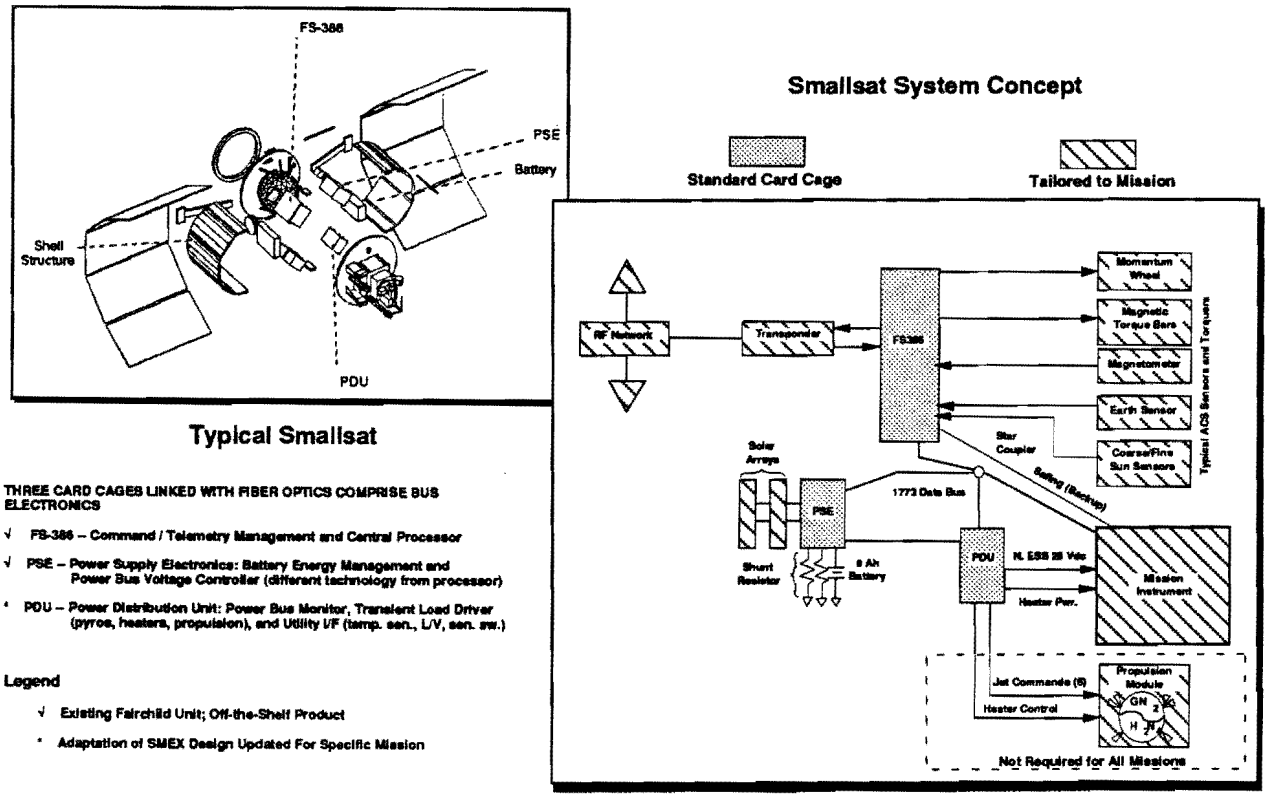

Figure 4.1 Fairchild Structural Packaging and Small Satellite Architecture

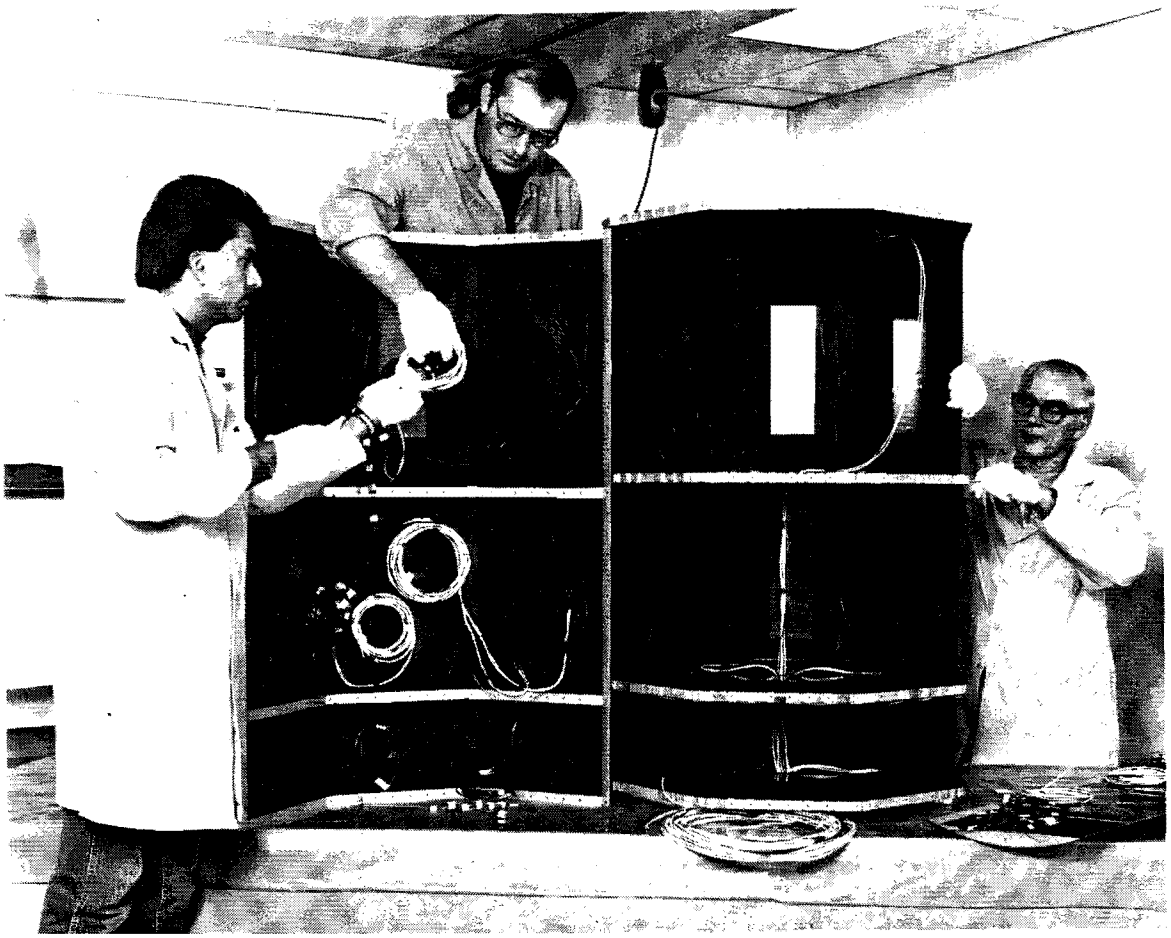

Figure 4.2 Small Satellite Structure in Final Integration Prior to Environmental Testing

cylindrical segments with flat interior walls, and into flat end plates in an octagonal shape to fit within the interior of the assembled segments, as shown in Figure 4.1. A photograph of cylindrical segments and end covers as fabricated in the Fairchild bonding laboratory is shown in Figure 4.2. Any number of segments up to four (a complete semi-cylinder) can be fabricated in one piece. A method has been developed by Fairchild to allow fastening of components directly to the interior flat panels without locally stressing or distorting the walls or the honeycomb material. Segments are bolted together at their edges, as are the end covers to the cylinder.

The design is such as to assure a good thermal environment is achieved:

- Mounting of equipment directly to the exterior surfaces assures that minimal temperature drops will be achieved.
- The single, closely-coupled interior volume will assure maximum radiative coupling from warmer to cooler sides of the spacecraft, thus tending to smooth out temperature differences, and tending to automatically limit high-temperature excursions.

These factors may make a completely passive temperature control system feasible.

4.2 POWER SUBSYSTEM

4.2.1 BATTERY SIZE ANALYSIS

Battery requirements were estimated based on the orbit-average mission power requirement of 260 watts, with a nominal 40% depth-of-discharge. It was assumed that full power could be required at any time in the orbit, but that peak power demands would be fairly evenly distributed between sun & eclipse periods. The

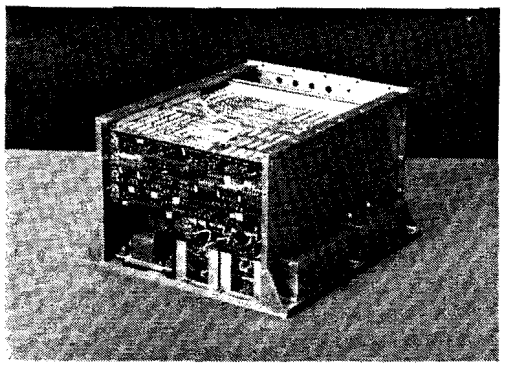

Figure 4.3 Photograph of SAMPEX PSE

resulting battery size is 20 A-Hr NiCd, weighting some 24 kg.

The single battery is installed late in the assembly sequence already-mounted to a separately-removable section of the shell of the power module, as has been designed into the Fairchild structure.

4.2.2 SOLAR ARRAY DESIGN

In order to minimize stowed volume, GaAs cells were selected for the initial design evaluation. Because all efforts were devoted to minimizing the mass of the low-orbit spacecraft in order to preserve the Pegasus launch option, and because the 500-km orbit is a relatively benign radiation orbit, a 3-mil cover glass was assumed for this case.

Mechanically, the arrays are fully standardized; i.e., deployment mechanisms, drive- and power-transfer mechanisms are standard, and each panel is 81 x 56 cm. in size. The array consists of 8 panels for a total array area of 3.6 square meters.

4.2.3 POWER CONTROL AND DISTRIBUTION

The power control system is an outgrowth of Fairchild's development for the NASA Small Explorer (SMEX) power subsystem. It is a Direct Energy Transfer system, shown in Figure 4.3. This approach was selected by NASA for its simplicity and low mass and power consumption. A complete orbits operation from the first SMEX mission is shown in figure 4.4. Its

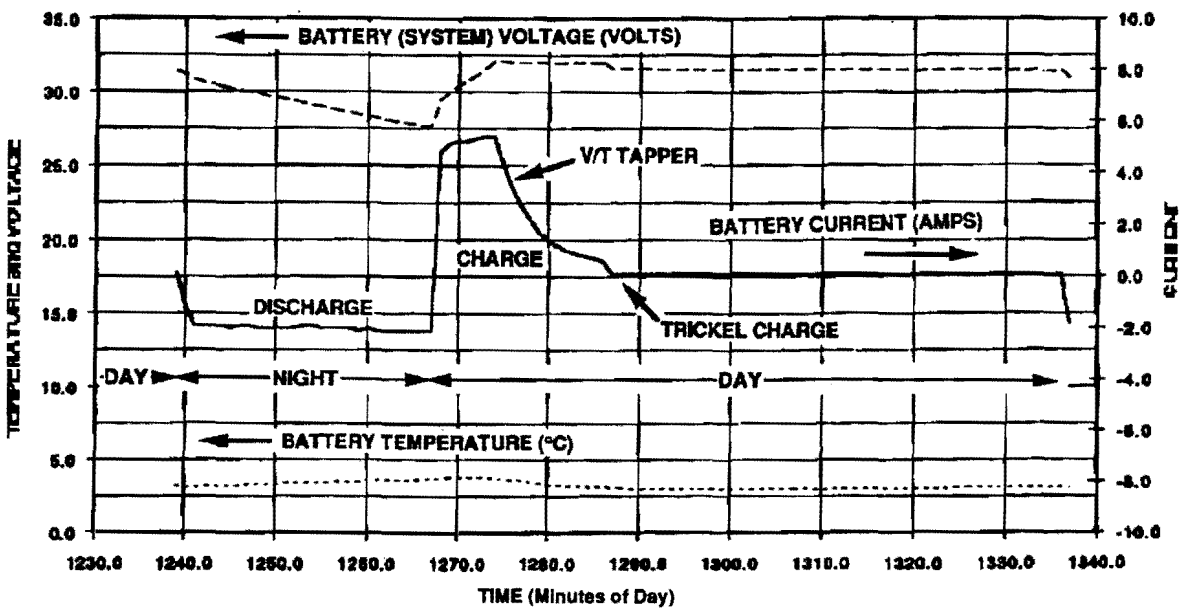

Figure 4.4 NASA/GSFC Data Demonstrating Operation of the SAMPEX Power Subsystem on Orbit Number 250 /251

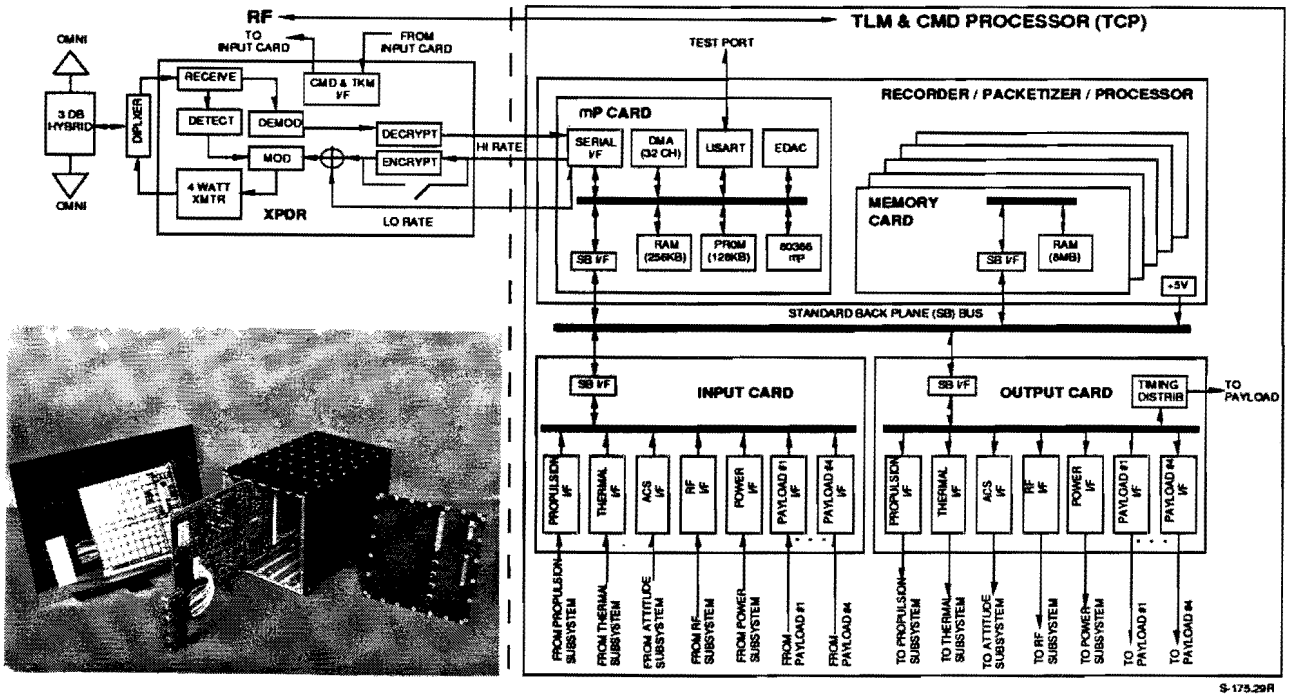

Figure 4.5 TT&C and RF Subsystem Block with SAMPEX RPP Photograph

features are:

- Sequential linear shunt to reduce internal power dissipation
- Battery connected directly to the bus for low impedance
- Ampere-Hour C/D charge control for extended battery life
- Bus overvoltage, undervoltage, and overcurrent protection
- Battery undervoltage, maximum charge rate, and overtemperature protection
- Low bus ripple; low EMI generation

The power control electronics is estimated to weigh 7.5 kg and consume an orbit-average 9.5 watts of power. As now configured, the power control unit will control a single battery of 20 or 30 A-hr capacity.

A power distribution unit has also been baselined in order to provide a central power switching and distribution function as well as containing the electroexplosive device (EED) control circuits for arming and firing of pyros. At present, this box is included at 3 kg and 2.5 watts.

4.3 COMMUNICATIONS AND DATA HANDLING

4.3.1 STANDARD MODULE

The communications subsystem is designed in two modular elements, as illustrated in Figure 4.5: The basic communications package is provided for standard low-rate telemetry and satellite control commanding, with a standard low-power (e.g.; 1-to-4 watt) SGLS transponder feeding and receiving signals from a pair of 3-dB omnis mounted on either side of the spacecraft. This basic communications and data handling module flies with all missions and provides communication through the CSOC. Data rates of 10-to-1000 kbps are readily supported over this link, depending on satellite altitude.

Users equipped with a 2-meter S-band remote terminal can receive mission data from the satellite at moderately high rates, e.g., at 1 Mbps, and may be able to command the radar to produce a required scene, depending on system architecture. This data will then be downlinked by the high-rate module.

4.3.2 HIGH-RATE MODULE

The second communications package is the High-Rate Module, which is used to downlink the radar data. It is configured with X-band Space MIDL (Modular Interoperable Data Link) equipment, to be compatible with existing X-band MIST (Modular Interoperable Surface Terminal) equipment installed on many surface vessels and ground sites, thus providing the much-desired backward compatibility with tactical airborne reconnaissance systems.

The MIDL equipment is designed with standard data transmission rates at 10.71, 137, and 274 Mbps. For RAR operation, transmission would be at 10.71 Mbps, involving a store-transmit by the data handling module, with approximately 3:1 time stretch. For SAR operation, the time delay in transmission at the 10 Mbps rate may be unacceptable, and transmission at the higher rates may be desirable. The FLAPS technology offers unique options here. The radar antenna may be designed to be dichroic (or trichroic) to be usable at X-band simultaneously with the selected radar frequency. The X-band beam may be directed in a different direction from that of the radar beam. This approach would allow transmission at the 274 Mbps rate with a good margin. The alternative would be to boost the ground terminal antenna gain or the spacecraft transmitter power. These are critical tradeoffs to be performed, taking into account the desired operating modes of the user community.

4.3.3 DATA HANDLING COMPONENTS

The baselined data handling system is contained in a single card-cage box. Together with the S-band communications hardware, it completes the LSR communications and data handling module, as shown in Figure 4.5. This is the Fairchild-developed Telemetry/Command Processor (TCP) data system, a microprocessor-based modular system which controls a MIL STD 1773 fiberoptic data bus for all on-board communication. TCP is based on a MIL STD 1750A microprocessor chip, which will handle up to 2 MIPS of data-processing throughput, and is extremely mass-, power- and cost-effective.

The system is used as a unit integrated with the Fairchild-developed solid-state memory system. The availability of a high input/output rate record/playback system is crucial to the space radar operation. However, this system must be impervious to single event upsets (SEU's) in a high natural radiation environment. Memory scrubbing and failed component detection techniques are utilized to insure reliable operation in a space environment. Fairchild Solid State Recorders (SSR) were flown on the P87-2 (atl.: 740 km; incl.: 89.7°) and Meteor-3/TOMS (atl.: 1202 km; incl.: 82.5°) satellites launch in 1990 and 1991, respectively, and were incorporated in the SAMPEX RPP (see Figure 4.5) launched in 1992 (atl.: 510 x 690 km; incl.: 82.5°). These are the only NASA SSR's currently in orbit. Figure 4.6 illustrates the location of the Meteor-3/TOMS spacecraft in orbit when single event upsets occurred and were automatically corrected. The data nicely maps the South Atlantic Anomaly. Similar on-orbit results have been seen on the P87-2 and SAMPEX spacecraft. This system is also available as a stand-alone replacement for magnetic tape or optical disc recorders (The Fairchild Solid-State Recorder). As used in the TCP application, the modular memory cards are mounted to a common (Multibus II) backplane with the processor card, the interface control card, and the power supply card. This configuration allows the memory cards to function as the data storage system for spacecraft control software, telemetry, and delayed commands. Typically, these functions consume only a small portion of the available memory, leaving substantial memory for payload use.

As a result of ongoing development at Fairchild, the next generation of memory card, expected to be available in 1-to-2 years, is expected to have 1.2 Gbits of memory per card. The system will also be able to accommodate over 274 Mbps input rate. Therefore, substantial storage capacity will be available for time-delayed transmission of RAR data, as well as limited strorage of SAR data The microprocessor and memory units are hardened to 30-to-40 krads, and consequently will require some shielding for the high-altitude mission, if it is to be flown near solar maximum. A one-cm. thickness of shielding has been included in the mass summary for these cards.

4.4 ATTITUDE CONTROL AND DETERMINATION

The attitude control and determination requirement is expected to be modest in the low-altitude mission,

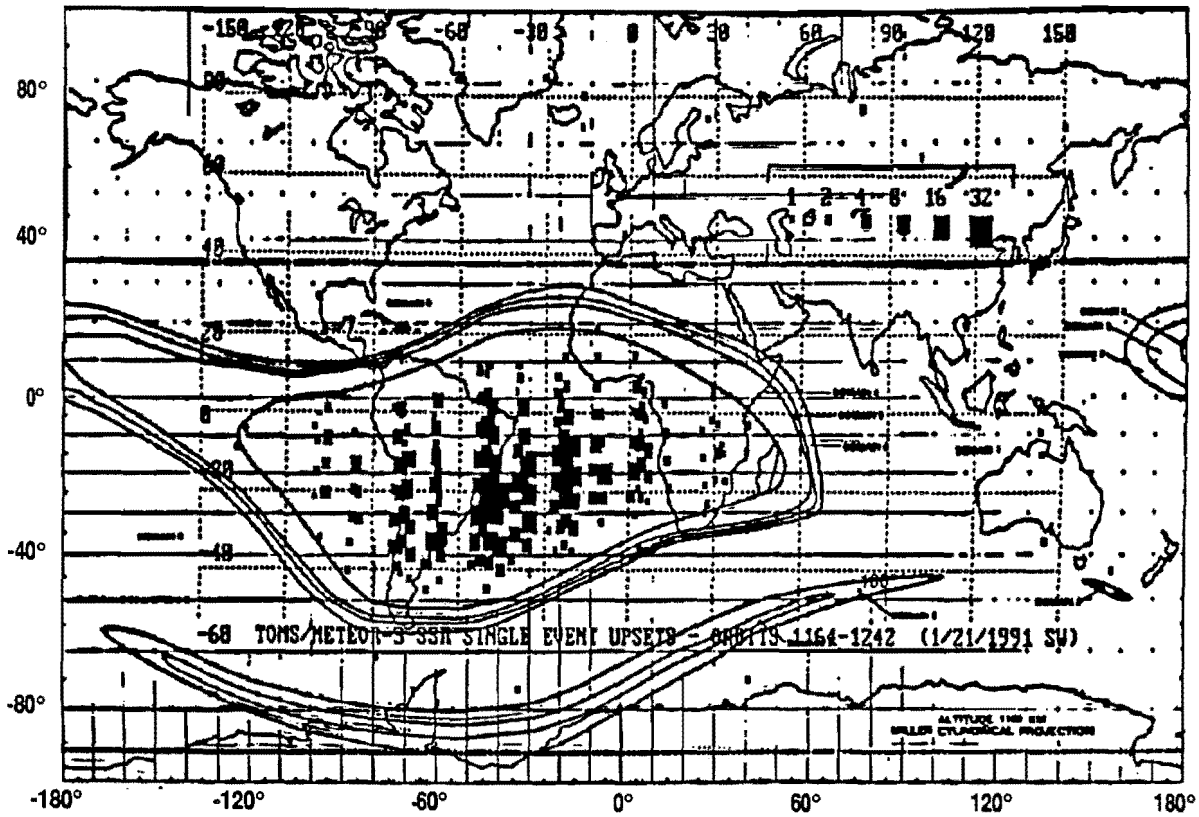

Figure 4.6 NASA/GSFC Data Showing Meteor-3/TOMS (altitude:1202 km; inclination: 82.5°) Location of SEU's

since the antenna mass is quite insignificant in relation to the total spacecraft, and its orientation is along the flight direction, thus minimizing any potential aerodynamic torques. The stabilization requirement can be satisfied by a bias-momentum reaction-wheel system combined with magnetic torquers and a number of sensors, as shown in the diagram of Figure 4.7. For a fixed wheel, the direction of the wheel axis determines the spacecraft pitch axis. Off-nadir pointing in the pitch direction is achievable over a limited range, but less easily achieved in other directions for long periods. Alternatively, the antenna itself can be mounted on a single- or dual-axis gimbal and steered independently. The light weight and passive nature of this antenna may make this a preferred alternative.

The sensor complement consists of a fore- and aft-looking horizon sensor pair, mounted to the payload interface plate, a pair of fan-beam sun sensor mounted such as to intersect the sun at least once per orbit, and a three-axis magnetometer to assist in use of the magnetic torquers for momentum unload. The horizon sensors provide continuous knowledge of roll and pitch orientation to an accuracy of approximately 0.08°. To hold roughly the same order of magnitude in yaw requires a sun-sensor update at least once per orbit.

During normal operations, all axes are held to within approximately 0.5° by the action of the momentum wheel of the proper size. An alternative single-wheel configuration capable of 0.1° control is also available. A control-loop bandwidth of 0.01 Hz will provide rate stability of at least 0.002 degrees per second.

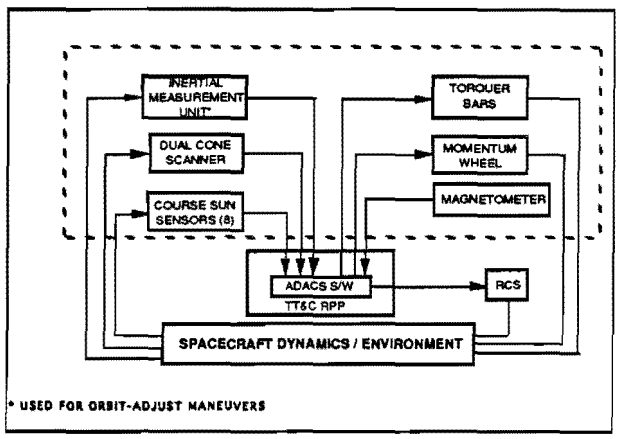

Figure 4.7 Block Diagram of the Functional Flow of the AD&C Subsystem

4.5 PROPULSION

The propulsion subsystem, shown schematically in Figure 4.8, is assembled as a fully-welded unit, using the lower spacecraft end cover as a structural support. A 12.5-inch spherical tank, which is capable of carrying

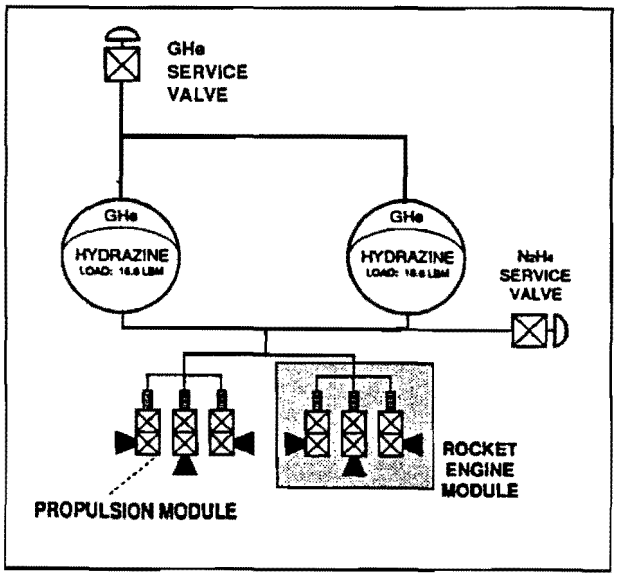

Figure 4.8 Schematic Block Diagram of the Modular Propulsion Subsystem Concept

some 8 kg of hydrazine, is shown in the spacecraft drawings. The tank penetrates a central aperture in, and is mounted to, the structural cover. Two or three sizes of propulsion modules can be inventoried, with tanks sized up to the limit of the available volume (~15 inches; 20 kg hydrazine, if spherical). Two sets of thruster assemblies, each with three 1-newton thrusters, is mounted to the outboard portion of the structure, and oriented in such a way as to provide linear thrust for orbit-adjust or -trim, as well as tangential thrust for spacecraft rate control.

One of the most useful applications of the propulsion subsystem is to enable orbit-raising so as to increase the mass -to-orbit capability, particularly of the smaller boosters, as well as to do orbit-trim for precise orbit placement and drag makeup.

5. System POWER AND MASS

From previous studies of the Fairchild smallsat in a variety of applications (see, for example, reference[3]), we know that orbit-average power must be limited to the range of 250-to-270 watts in order to fit within a Pegasus-class vehicle. This is readily achievable in this application by adjusting the radar duty-cycle accordingly. Table 5-1 illustrates one possible combination of duty cycles which results in the required orbit-

		500 KM orbit		
		ON POWER	ORBIT FRACT.	ORBIT AVE.
		watts	%	watts
SPACECRAFT POWER		55	100	55
RADAR DC POWER	RAR MODE	610	30	183
	SAR MODE	5	20	1
XMIT POWER (DC)		50	50	25
TOTAL				264

(RF/DC=0.4)

Table 5-1 System Power Requirement

average power. Radar duty cycles of 20 and 30% are consonant with the concept of a regional-coverage system, in which ~20 minutes each of real aperture and synthetic aperture radar operation is possible in each orbit.

Spacecraft mass is summarized in Table 5-2. Antenna mass is based on the rigid panel design; in general, the FLAPS™ configuration reduces the antenna and supporting structure to a minor fraction of the overall payload mass. Total system mass is such as to allow direct injection of the satellite into the 500 km mission orbit with a reasonable 30% mass margin.

[3] B. Raab, Modular Small Satellite Design for Responsive Tactical Applications, 4th Annual AIAA/Utah State Conference on Small Satellites, August 27-30 1990

SUBSYSTEM	MASS KG.
POWER	89
C&DH	16
HIGH RATE COMM	18
AD&CS	20
STRUCTURE	12
THERMAL	8
HARNESSES	20
BUS SUBTOTAL	182
PAYLOAD MODULE	71
RADAR ELECTRONICS	62
ANTENNA	2
FEED + MAST	2
STRUCTURE	5
TOTAL SATELLITE WEIGHT	253
BOOSTER CAPABILITY INTO MISSION ORBIT	PEGASUS 330
MARGIN, KG	77
MARGIN, PERCENT	30%

Table 5-2 System Mass Summary

6. CONCLUSIONS

A small-satellite scientific or surveillance radar system appears feasible for regional-coverage applications. Based on the parameters selected in Table 2-1, there is a 90 percent probability of detecting objects such as small ships and aircraft, for example, with a 5 square meter radar cross-section, and the SAR resolution of 1 x 6 meters makes it possible to distinguish between them. The innovative FLAPS™ antenna concept enables the packaging and deployment of a 12-by-0.7-meter L-band antenna within the mass and volume limits of a Pegasus launcher. The FLAPS™ has the unique feature of permitting switched real-aperture and synthetic-aperture operation within a completely passive reflector antenna. The Fairchild small satellite bus provides the required housekeeping functions in a well-developed design with orbit-proven subsytems.

APPENDIX: Radar System Parameters

SAR SUMMARY INFORMATION
VERSION 1.1

INPUTS:

Mission Information:

Orbit Altitude:	5000000	m
Orbit Inclination:	70	deg
Steered Beam Used:	Yes	
Revisit Interval:	12	hrs
Revisit Latitude:	60	deg

Scene / Target Information:

Incidence Angle:	20	deg
Squint Angle	90	deg
Desired Swath Width:	160000.00	m
Signal-to-Noise Ratio:	6	dB
Radar Cross Section:	5.000	m ^2
Azimuth Resolution:	6.00	m
Range Resolution:	1.00	m
Dynamic Range:	24	dB

Radar Information:

Wavelength:	0.200	m
Frequency:	1.50	GHz
Antenna Noise Temperature:	578.67	K
Pulse Compression Ratio:	500	
Loss Budget		
Beam Shape	0	dB
Transmit Line Loss	0	dB
Filter Mismatch	0	dB
Sampling	0	dB
Collapsing	0	dB
Miscellaneous	2	dB
TOTAL LOSSES:	2	dB

SAR SUMMARY INFORMATION
VERSION 1.1 (CONTINUED)

OUTPUTS:

Mission Information:

Orbit Circumference:	43200040.58	m
Revisit Latitude Circ:	20029223.96	m
Orbit Period:	94.53	min/rev
Orbit Rate:	15.23	rev/day
S/C Orbital Velocity:	7616.32	m/sec
Ground Track Velocity:	7062.44	m/sec

Number of S/C for desired Coverage:

WITH Steered Beam	4.1
WITHOUT Steered Beam	6.1

Viewing Geometry Information:

Depression Angle:	72	deg
Target Range:	529549.8	m
Ground Range Resolution:	2.92	m ^2
Minimum Antenna:	4.70	m ^2
Actual Antenna:	8.45	m
Actual Antenna Dimensions:		
Azimuth:	12	m
Range:	0.704	m
Synthetic Aperture Length:	8826	m
Far Range to Near Range Difference:	54723	m
Distance from Nadir Point to		
Near Edge of Swath:	87965.0	m
Far Edge of Swath:	247965.0	m
Unfocused Azimuth Resolution	162.72	m

OUTPUTS:

Radar Information:

Average RF Power:	4.81	watts
Peak RF Power:	670.31	watts
Pulse Repetition Fre.:	2153	pps
Transmit Pulse Width:	3.333E-06	sec
Integration (Dwell) Time:	1.25	sec
Duty Cycle:	0.72%	
Receiver Noise Figure:	3	dB
Total Losses:	2	dB
Transmit Bandwidth:	150.00	MHz
Receive Bandwidth:	180	MHz
Data Rate:	1413.83	Mbps