LAUNCH VEHICLE TECHNOLOGY AND THE IMPACT UPON LIGHTSAT DESIGN

Jason O'Neil
Defense Systems, Inc.
McLean, Virginia

Abstract

Low cost satellites require low cost access to space. Today, several companies are attempting to provide competitive launch services for small satellites. DSI, which has launched 18 lightweight satellites, has extensive experience in the areas of satellite design, launch planning, integration and test. The selection of an ELV has important impacts upon the design of the satellite. This paper focuses on 2 areas: 1.) the environments of the small ELVs and 2.) the corresponding impacts upon the satellite design. The author uses recent flight experiences to create a template which the designer can use to better understand the engineering constraints and cost implications of launching from this new generation of small launch vehicles.

I. Introduction

Today's budget pressures on space projects demand lower cost access to space. In response to this market need, several entrepreneurial companies are developing small Expendable Launch Vehicles. Companies like Orbital Sciences Corporation, International Microspace, Inc., EER, Inc. and others are attempting to recreate the Scout vehicle success story with lower cost alternatives. Part of this story will be the evolutionary standardization of interfaces. This will allow each ELV vendor to attract the greatest variety of payloads. In addition, a key benefit will be the shorter development and ground processing schedules commensurate with "common" interfaces between the ELV and the lightsat.

Planning a light weight spacecraft program begins with the designation of the launch vehicle. The ELV is such a significant portion of the program cost, that the price and payload accommodations become the foremost programmatic decision. Today, government-sponsored and commercial lightsat ventures are stymied by the lack of operational, cost effective lightsat ELVs. Consequently, the spacecraft manufacturer must fully understand the ELV environment, its impact upon spacecraft design and begin to plan and control these interfaces at the inception of the program.

Figure 1, depicts the launch vehicle fairing dynamic envelopes of several ELVs.

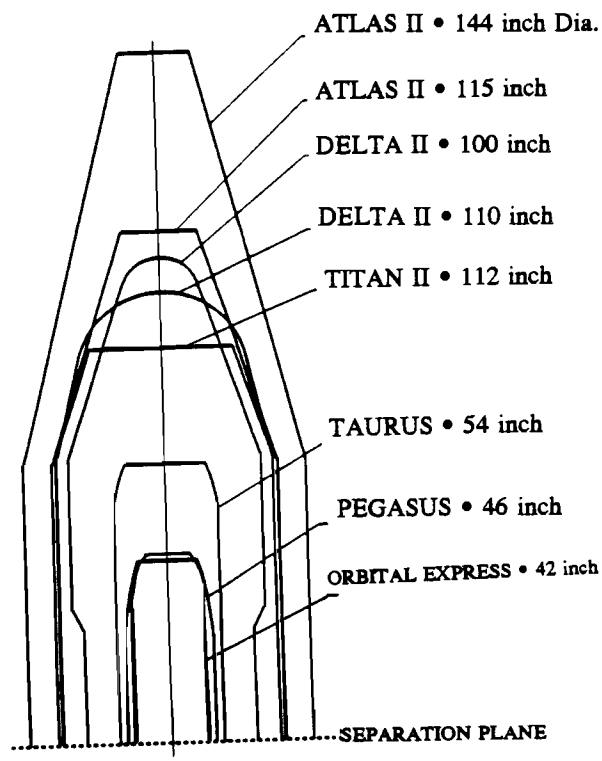

Figure 1. Launch Vehicle Fairing Dynamic Envelopes

The fairing configuration often dictates the spacecraft configuration, particularly with respect to deployable bus elements and experiments. The fairing also imposes restrictions relative to stacked or multiple spacecraft on a carriage similar to DSI's Microsats® launched from the Pegasus F-2 in 1991.

II. ELV Environment

Primary structural loads are separated into component static loads and random vibration in all 3 axes. Maximum accelerations for each stage are a function of payload weight. These values must be known for flight and stage separations. In the case of the Pegasus, the acceleration must also be known for taxi, drop transient, pull-up and abort landing of the carrier aircraft. Figure 2 depicts the current environmental characteristics of the Pegasus XL® small launch vehicle. It is illustrative of "typical" environments and useful for spacecraft design considerations. By comparison, the linear acceleration in the thrust axis for the Delta is 7.7 (Gs) at stage 2 shutdown. The linear acceleration for the Taurus is projected at 8.0 assuming on 1,800 Lbm payload.

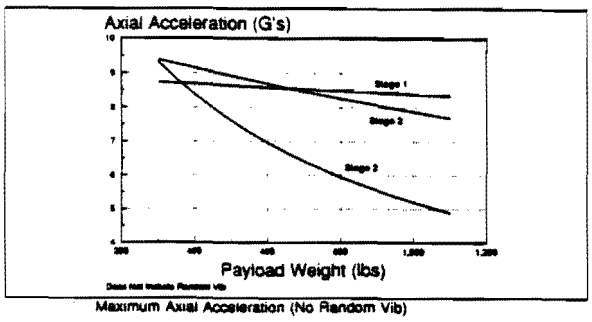

Figure 2. Pegasus XL® Environments (Preliminary)

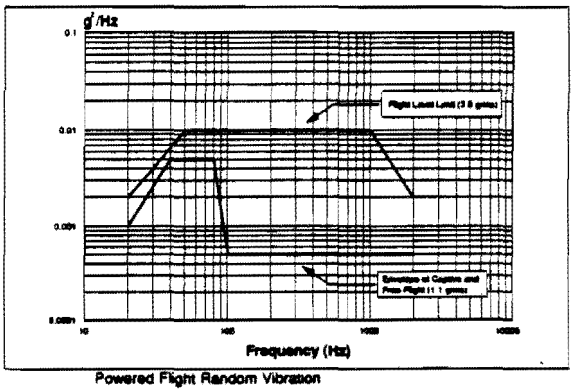

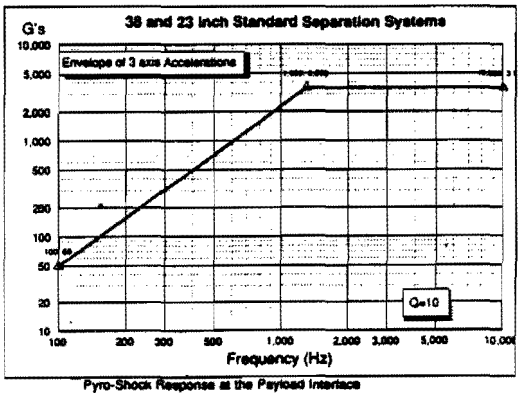

Figure 2. Pegasus XL® Environments (Preliminary) cont'd.

Another environmental condition that must be factored into the spacecraft design is the ELV's overall sound pressure level (OASPL). This environment for the Pegasus is shown below in Figure 3. Notice how the db level increases during the lift-off of the carrier aircraft. A very limited number of payloads, eg. with thin membranes, may be adversely affected by this acoustic pressure.

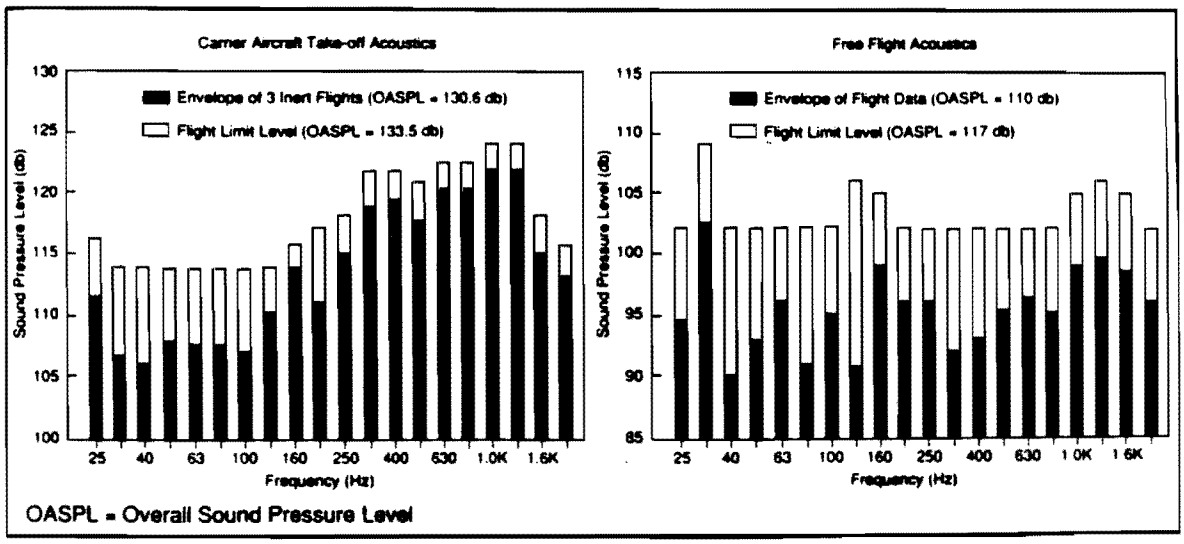

Source: OSC, June 1991

Figure 3. Payload Acoustic Environment, Pegasus XL®

For most spacecraft the thermal environment during ground operations is very important. Most spacecraft expect a range of 50 to 85 degrees F at humidity levels less than 50 percent. The thermal dissipation of the payload during ground operations should not exceed 15 watts. The temperature during flight varies widely according to the launch vehicle. Figure 4 depicts this range.

Launch Vehicle	*Temperature °C (°F)*
Pegasus ALV	100 (212)
Taurus SSLV	100 (212)*
Delta II	65.6 (150)
Atlas II	204.4 (400
Titan II	150 (302)

* Max predicted temperature

Figure 4. Fairing Internal Wall Maximum Temperatures

Recently, International Microspace Inc. (IMI) of Herndon, Virginia, announced its small ELV, the Orbital Express. This 4-stage solid engine ELV is capable of boosting 400 pounds to 400 nmi from Wallops Island. The vehicle's first flight is planned for mid-1994. The payload environment is summarized in Figure 4a.

Environmental Characteristics	*Parameter*
• Heatshield max temperature	< 150°F
• Max. ambient pressure drop	< 1.76 psia
• Stage 4 adapter temperature	< 150°F
• Max. Longitudinal shock at I/F	< ± 30 Gs
• Max. Lateral shock	< ± 60 Gs
• Max. Longitudinal acceleration	< 10 Gs
• Max. random vibration	< $.03g^2$/Hz
• Max. sound pressure	< 133 dB
• Adapter (Scout 25E)	61.59 cm
• Separation velocity	1.5 to 4 FPS
• Roll rate	1-2 RPS

Figure 4a. Orbital Express Payload Environment

The payload (and spacecraft bus) is normally provided a Class 10,000 clean room environment during ground processing. Whether ground processing is in the horizontal or vertical position, softwall cleanroom enclosures can be provided. In the case of the Pegasus, the payload is provided a Class 100,000 air quality during taxi and captive flight. During flight, the fairing must be comprised of materials which will not ablate resulting in a total mass loss of more than 1 percent. Condensable volatile material must not exceed $\leq$ 0.1 degree per ASTM E595 Standard. Payload fairing cleanliness should be compatible with

Class 100,000 cleanroom standards during ground operations.

Radio Frequency transmissions by the payload are not allowed at the range unless under specified, scheduled test conditions. The payload remains dormant after fairing mate and prior to separation from the launch vehicle. Figure 5 depicts the sources of RF energy for the Pegasus by function. Spacecraft designs, particularly safety systems, must assure no spurious RF emanations at the launch site and during flight.

The spacecraft manufacturer must provide a mass properties statement to the ELV team months before the launch. This data is necessary for the calculation of the effects of dispersions on the final trajectory as well as guidance, navigation and control accuracies and stability. The final mission data load software is verified using the mass properties parameters. Once the software is complete and verified, a final trajectory is submitted to range safety. The spacecraft designer must ensure that the Center of Mass (CM) offset limits in the X-axis (vehicle centerline) are allowable, usually to within .5 inches. In addition, the weight (mass) statement must be accurate to .5 percent of the measured value.

Source	1	2	3	4	5
Function	Command Destruct	Tracking Transponder	Tracking Transponder	Instrument Telemetry	Booster Telemetry
Role	Receive	Transmit	Receive	Transmit	Transmit
Band	UHF	C-Band	C-Band	S-Band	S-Band
Frequency (Mhz)	416.5	5765	5690	2269.5	2288.5
Bandwidth	180 khz	N/A	14 Mhz @3db		315 kHz @3db
Power Output	N/A	400 W Peak	N/A	5 W	5 W
Sensitivity	-107 dBm	N/A	-70 dBm		N/A
Modulation	FM	Pulse Code	Pulse Code	FM	PCM/FM

Source: OSC, July 1992

Figure 5. Pegasus RF Environment

The launch vehicle Reaction Control Subsystem (RCS) thruster alignment is determined by a combination of spacecraft mass and CM offset. This relationship is shown in Figure 6. If the spacecraft CM is within the shaded region, the RCS thrusters must be placed in a specific position to maintain control authority throughout the flight.

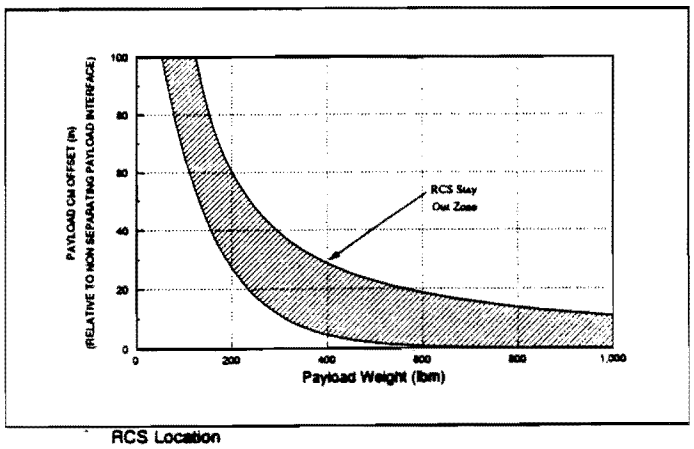

RCS Location

Source: OSC, July 1991

Figure 6. Reaction Control Subsystem Location

The spacecraft's separation system is mounted to the last stage of the ELV via an aluminum interface ring. Figure 7 depicts this interface with a view looking aft toward the third stage of the Pegasus. The interface attachment is a bolt circle pattern of 60 equally spaced holes at a radius of 19.4 inches. The separation system is a 38 inch Marman band V-ring assembly with two externally mounted bolt cutters. The Interface Control Document (ICD) provides an Interface Verification Matrix which includes a checklist for completion of preflight payload activities and action closeout certifications. Figure 8, Interface Verification Checklist, provides a summary list of the requisite activities to be performed by the spacecraft vendor.

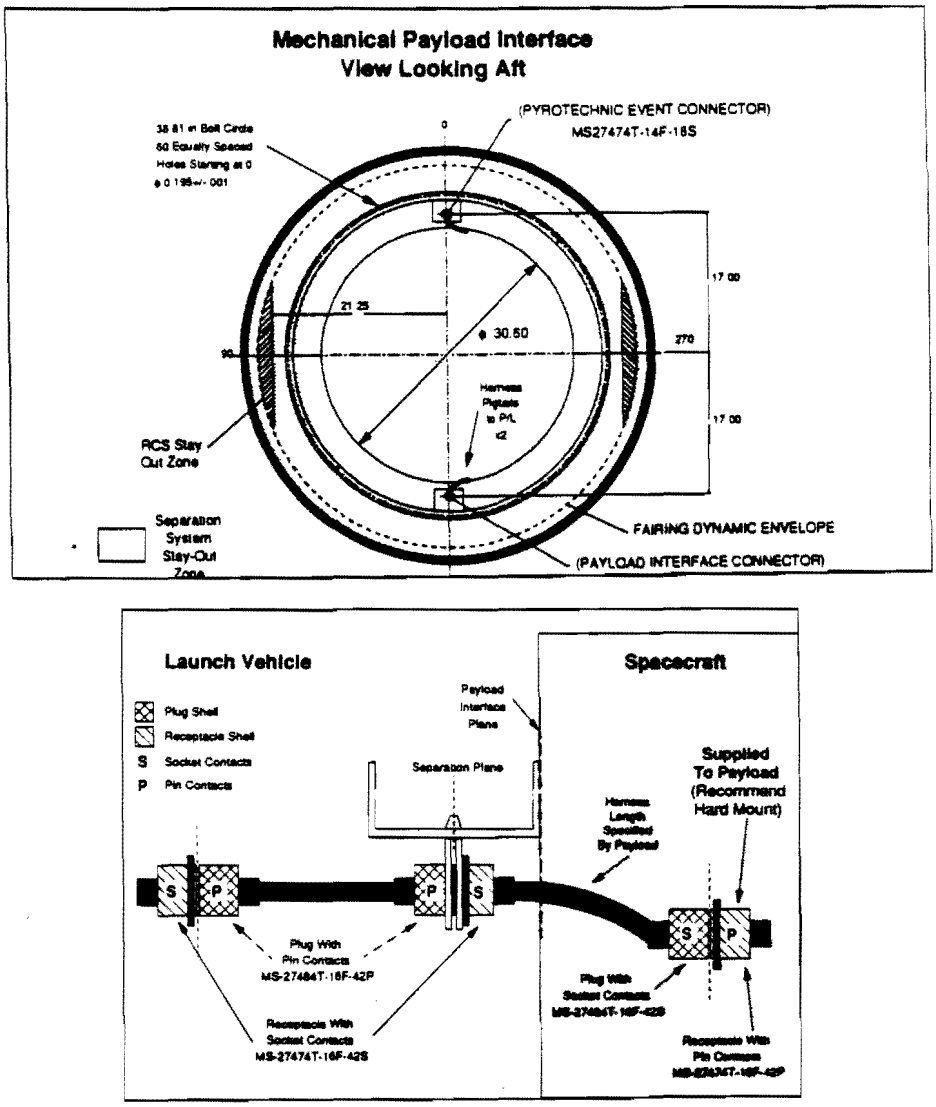

Source: OSC, ICD, 8/91

Figure 7. Pegasus Mechanical Interface and Separation System

Environment	*Configuration*	*Interfaces*
Acceleration	Mass Properties Statement	Mechanical Interface
Vibration	Center of Mass	Payload Attachment
Random Vibration	Fundamental Frequency	Payload Envelope
Sine Vibration	Components Violating Envelope	Separation System
Pyrotechnic Shock	Radiation Prior to Separation	Fairing Access
Payload Ordnance	Ordnance	Payload Integration
Payload Thermal Dissipation	Propulsion System	Mission Specific Hdwre
Humidity	Hazards	Electrical Interface
Aerodynamic Heating Rate		Carrier Aircraft (ALV)
Contamination Control		Payload Telemetry
Payload Fairing Cleanliness		ELV Electrical Firing Pulses (EFP)
Material Selection		ELV Discrete Commands
Debris Impingement		ELV Interface Connectors
Electromagnetic Compatibility		Connector Pin Assignments
RF Environment		Mission Specific Hdwre/Sftwre
Payload EMI/RFI Environment		Facilities
Electromagnetic Compatibility		Operational Areas
General Requirements		Comms.Requirements
Thermal		Power Requirements
		Payload Handling/Test Equipment
		Special Equipment

Figure 8. Spacecraft Environment, Configuration and Interface Verification Checklist

III. Impact on Spacecraft Design

Figure 9 summarizes the impact of the ELV on the spacecraft, particularly the design and analysis activities. This list is only a summary of the design considerations and is meant to alert the organization considering a lightsat mission.

AREA	IMPACT ON SPACECRAFT DESIGN
1. ENVIRONMENT	• Spinning vs. non-spinning: structure, stiffeners, box location, fasteners • Acceleration: structure, boxes mounted on bottom of horizontal plates, cables, connector location • Random vibration: solar cell attachment, transients • Mass properties: subsystem location, materials • Pyro-shock: attach fittings; connectors • Thermal ranges: expansion coefficients • Sound pressure levels: mechanical and electrical connections • Class 10,000 clean: lens covers • EMI: spurious emanations • Outgassing: conformal coatings and/or contamination
2. MECHANICAL RELEASE	• Electrostatic Discharge Bonding; no resistance greater than 10 m Ω between structures • Tip-off masses • Redundant springs • Simple Marman band attachment
3. ELECTRICAL	• Electromagnetic compatibility • EMI safety margins for pyro circuits • Grounding; isolation • Power umbilicals, feed-throughs • Primary + secondary separation systems • Connector Pin Assignments
4. DATA TRANSFER	• Feed through; RS 422/standard bus • Telemetry environment at launch site (RF)
5. ACCESS	• Fairing door(s) dimension, location
6. GROUND PROCESSING	• Electrical power, phase, Amp, grounding • Handling attachment points • Contamination control measures • MGSE/EGSE design, test and operation
7. DOCUMENTATION	• Interface Control Documents • Range Safety Regulations • Schedules • Plans • Manuals

Figure 9. Impact of ELV on Spacecraft Design

IV. SUMMARY

The lightweight spacecraft industry is growing as customers devise new applications for these lower cost platforms. Small ELVs are being developed. The combination bodes well for economical access to space for the next decades. Both the spacecraft and launch vehicle must remain affordable in order to leverage the budget pressures which currently favor quick reaction, lower cost lightsat missions.

To this end, turnkey packages, standard buses, low cost ground stations and accelerated ground processing are all keeping lightsats as a viable option for many missions.

However, as this paper has highlighted, it is vital that the spacecraft design engineer thoroughly understands the launch vehicle prior to commencement of subsystem design. Only in this manner, will intelligent decisions be made about the spacecraft configuration and its handling at the launch site. For example, the seemingly small task of connector selection and placement is absolutely fundamental to lightsat design. Disregard for this simple premise can lead to delayed schedules, waste of man months, and even demanifesting of the spacecraft. In an industry known for its small profit margins, inattention to launch vehicle details early in the program can quickly lead to unprofitability.

REFERENCES:

1. Pegasus Payload Users' Guide, Orbital Sciences Corp. July 1991.

2. Orbital Express Payload Users' Guide, International Microspace, Inc., April 1992.

3. Eagle Spacecraft Users' Guide; TRW, Inc. and Defense Systems, Inc., March 1992.

4. Launch Vehicle Technology (Impact on Lightsats), J.C. O'Neil, Paper delivered to ESA Study Group, May 1992.