# ADVANCED EHF TECHNOLOGIES FOR LIGHTWEIGHT AUGMENTATION / RESTORATION COMMUNICATIONS SATELLITES*

**Dean P. Kolba, William L. Greenberg, David R. McElroy, and Marilyn D. Semprucci**

Lincoln Laboratory, Massachusetts Institute of Technology
Lexington, MA 02173-9108

Small EHF satellites can significantly complement the anti-jam service provided by basic EHF MILSATCOM space segments. Mobile/survivable launch vehicles with rapid launch preparations can be utilized to responsively deploy these small satellites into high altitude elliptical or circular orbits. From such orbits, only a few satellites are needed to provide high duty cycle coverage of a critical area. The communications capabilities provided by these EHF payloads can range from low data rate services (75 to 2400 bps per channel) to high data rate links (10 Mbps or more per link) depending on the payload configuration. Through the use of EHF waveform standards, these augmentation/restoration satellites will be compatible with existing and planned EHF terminals. Advanced technologies permit the development of the highly capable, lightweight payloads required for these roles. Some of the key payload technologies include adaptive uplink antennas; high speed, low power digital signal processing subsystems; lightweight frequency hopping synthesizers; and efficient solid-state transmitters.

## INTRODUCTION

User requirements for increased capacities and improved interference and detectability protection (e.g., protection from jammers, interceptors, and propagation disturbances) are motivating the evolution of MILSATCOM systems into the EHF band (i.e., 44 GHz uplinks and 20 GHz downlinks). Low data rate (LDR) service (75 to 2400 bps per channel), medium data rate (MDR) service (~10 kbps to ~5 Mbps), and high data rate (HDR) service (~10 Mbps and above) can all be provided at EHF. The architecture for providing these EHF MIL-

* *This work was sponsored by the Department of the Air Force under contract F19628-90-C-0002.*

SATCOM services will need to give the users assured access to the protected communications they require in order to fulfill their missions. Small EHF satellites can play a significant role in the overall architecture by complementing the service provided by the larger, fundamental service satellites [1,2]. These small satellites can augment the protected communications capacity of a system by utilizing the standard EHF transmission formats (MIL-STD-1582). Thus, these small augmentation satellites will be compatible with the current and planned EHF terminals being developed by the Services. The small satellites will also provide the architecture with flexibility to meet user requirements by allowing a responsive launch capability using small, mobile or transportable launch vehicles and by providing deployment of communications service in smaller increments.

Advanced technologies are critical for these types of payloads to provide significant capability in the low weight and power envelope available with a small satellite. The system concept for the lightweight satellites will be discussed briefly first. Then, the high leverage payload technologies will be described. Finally, some example lightweight EHF payloads, which provide a range of data rate capabilities, will be presented.

## SYSTEM CONCEPT

The system concept for the augmentation satellites [1,2] is illustrated in Fig. 1. Service in critical areas can be enhanced by small, lightweight EHF satellites which uses the standard anti-jam (AJ) transmission formats defined in MIL-STD-1582. These satellites are small enough to be responsively launched into high altitude elliptical or circular orbits by mobile or transportable launch vehicles. The lower incremental costs of placing capacity in orbit, along with the responsive launch capability will bring a new dimension of deployment flexibility to the overall MILSATCOM architecture. Advanced technologies will be critical for achieving the capabilities needed in these satellites within a lightweight, low power configuration.

With high altitude orbits, good coverage of an area can be obtained with only a few satellites as shown in Fig. 2. A single satellite in a geosynchronous altitude orbit can provide 100% coverage of a theater in mid-to-low latitude areas (up to about ±60° latitude). However, if the satellite size and launch vehicle capabilities necessitate launch into an inclined, elliptical orbit, good coverage of a theater can still be obtained with only two satellites. The use of the inclined, elliptical orbits may also be desirable for obtaining polar coverage

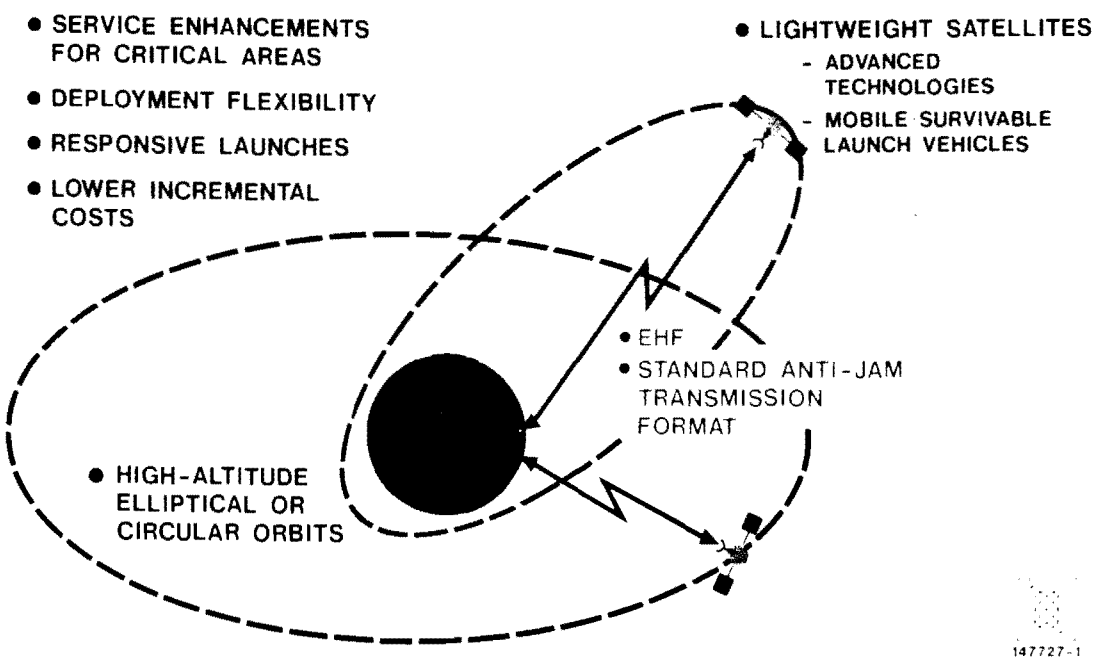


Fig. 1 Small Satellite System Concept

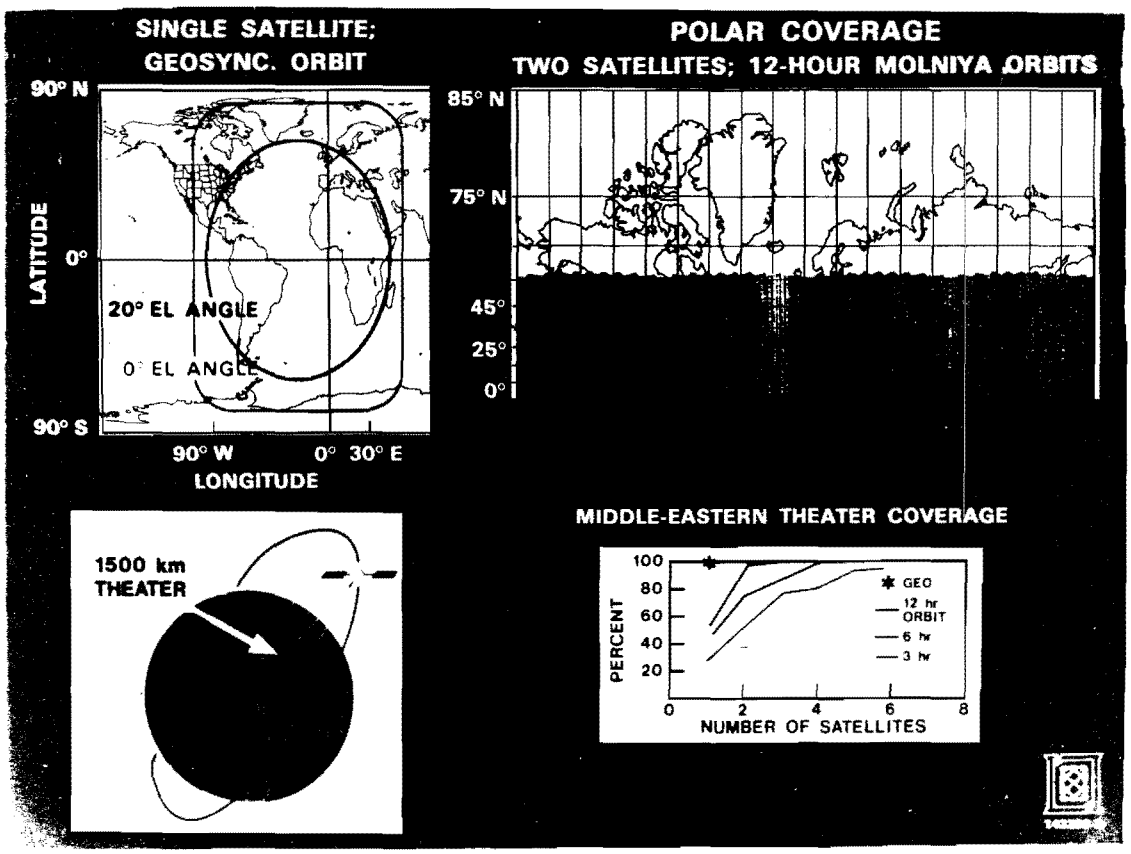


Fig. 2 Example Coverage with Geosynchronous and Elliptical Orbits

as illustrated in Fig. 2. Two satellites in 12 hr, Molniya-type orbits can provide 100% coverage to the regions above 57° north latitude.

## CRITICAL TECHNOLOGIES

An EHF communications payload can benefit significantly from advanced technologies in a number of high-leverage areas as shown in Fig. 3. These technologies can be applied to achieve lightweight satellites with highly capable payloads. In the antenna area, adaptive antenna techniques can be employed to provide high resolution nulling or to provide variable beamwidths (e.g., to compensate for changes in satellite altitude in an elliptical orbit). For the frequency hopping synthesizers, direct digital synthesizers coupled with hybridized RF/IF circuitry can lead to lightweight frequency generators. In the signal processing area, low power, high speed circuits can be utilized in payloads supporting LDR channels as well as payloads supporting MDR and HDR channels. Increasing levels of integration allow lightweight implementations of these subsystems to be realized. High efficiency, solid state transmitter modules can be utilized in either circuit combined or spatially combined transmitters to provide reliable RF power generation. Utilizing solid state devices

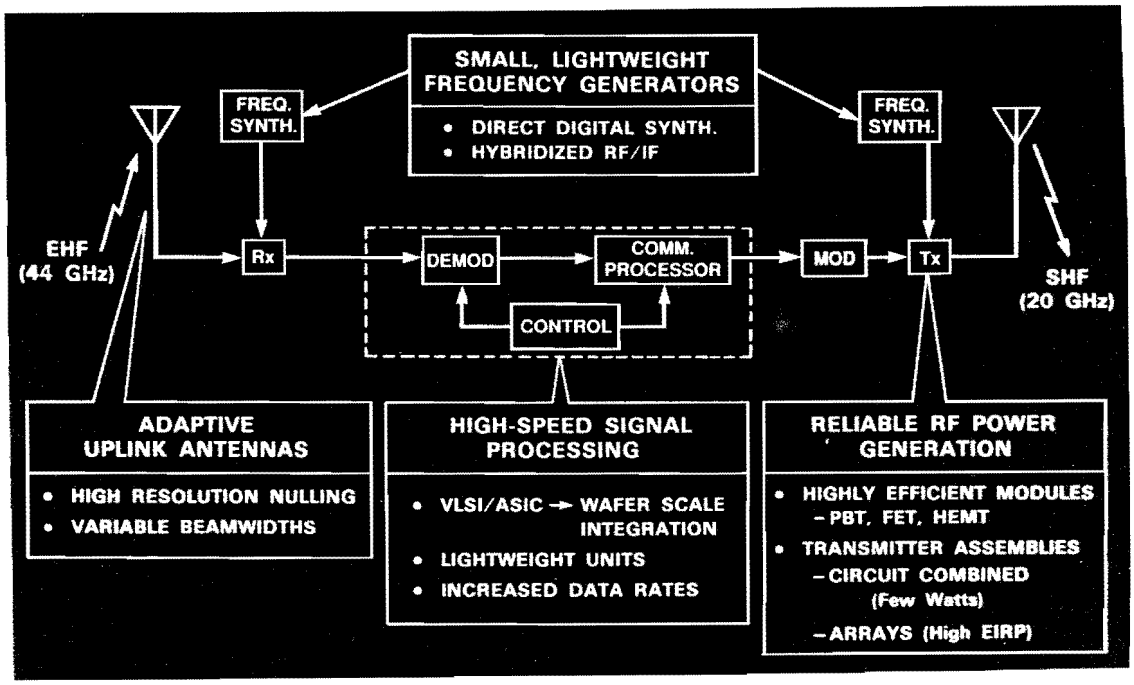


Fig. 3 High-Leverage Technologies for Future AJ Communications Satellites

also allows improved matching of output power levels generated to the effective isotropic radiated power (EIRP) required by the payload through the number of devices combined. Each of these areas of technology development will now be described in more detail.

For satellites in elliptical orbits, an antenna system must be able to point over wide angles in order to provide the desired coverage capabilities from the satellite as it changes altitude. A candidate lightweight wide-scanning spot beam antenna system is shown in Fig. 4. The only movable component in this system is the tiltable flat plate reflector. The antenna feeds and lenses (one for the uplink and one for the downlink) are mounted in a fixed position. This antenna system is able to steer a narrow spot beam, 4° in size, over a scan angle of 90°. Fig. 4 also illustrates the concept for a variable beamwidth antenna configuration. This antenna incorporates multiple feeds and variable power combiners/dividers into the uplink and downlink while retaining the use of the wide-scanning flat plate reflector. The resulting antenna can provide a spot beam of variable size (e.g., 4° to 20°) which can be steered over a wide field-of-view, thus allowing the antenna to adapt its gain pattern as well as its pointing angle to compensate for altitude changes with an elliptical orbit satellite.

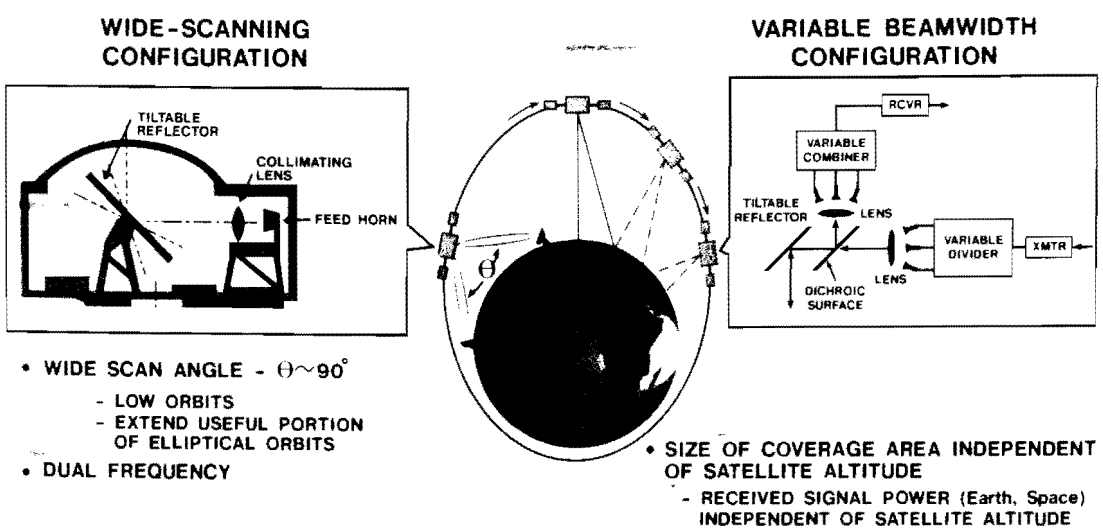


**Fig. 4 Steerable Spot Beam Antenna Technology**

For satellites in geosynchronous altitude orbits, agile adaptive antenna systems, such as illustrated in Fig. 5, can provide flexible service in a lightweight configuration [3,4]. Beams can be used in an agile beam manor with rapid beam repositioning. Alternatively, the beams can be used to dwell on a particular theater of interest. Flexibility to cover arbitrarily positioned theaters is provided by having a high degree of redundancy in the multiple beam antenna (MBA) coverage patterns. By having the MBA feeds provide overlapping coverage patterns and by forming the beams with multiple lenses, the antenna system can provide high resolution nulling with an autonomously adaptive, on-board nulling processor. This type of antenna system can provide the types of agile and spot beam service required by LDR, MDR, and HDR users.

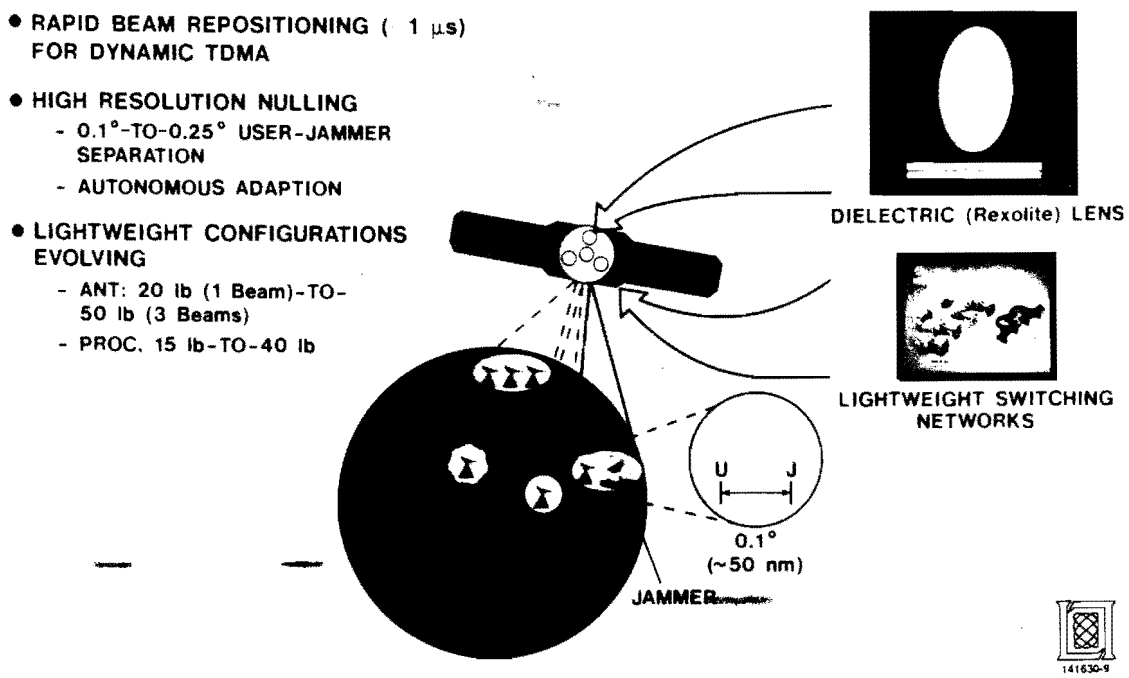


**Fig. 5 Agile, Adaptive EHF Uplink Antenna Technology**

Frequency hopping synthesizers play a key role in the signal processing functions for LDR, MDR, and HDR payloads. An advanced implementation of these synthesizers and the fixed frequency generators can result in significant weight and power savings. As shown in Fig. 6, current on-orbit versions of these subsystems were implemented with early 1980's technology for about

35 lb and 43 W. In the near term, using high speed, low power direct digital synthesizers and hybridized RF circuitry results in a subsystem requiring only about 4 lb and 17 W. This results in substantial weight and power reductions, by a factor of more than 8 in weight and by more than 2 in power, over the earlier technology.

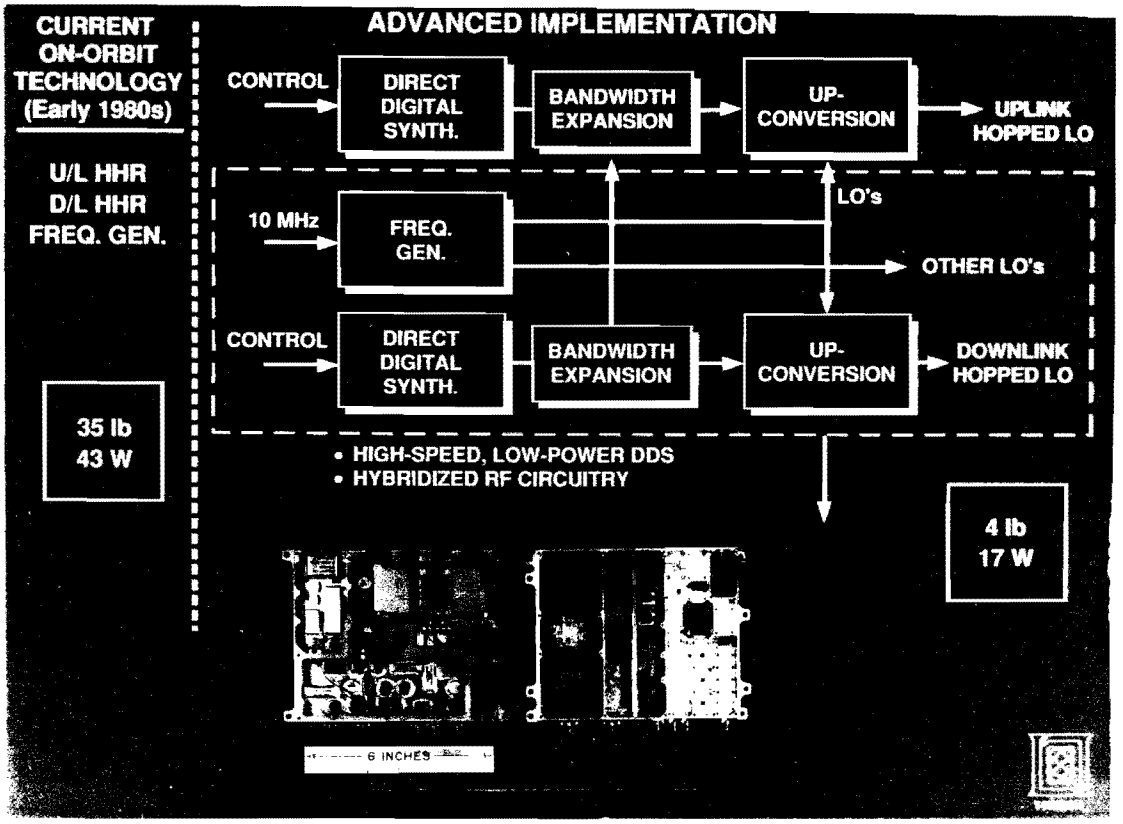


**Fig. 6 Frequency Synthesizer Weight and Power Reductions**

The other signal processing portions of an EHF payload, shown in Fig. 7, can benefit from the advances which have been made in low power, hardened VLSI circuitry. Utilizing high speed, hardened CMOS application specific IC (ASIC) technology, the signal processing functions required to demodulate the LDR waveform can be realized in a few chips with a resulting significant weight and power reduction. For example, the FFT required to demodulate the data and acquisition channels for a two beam, 32 channel LDR payload is expected to require no more than 8 lb and 24 W in the near term. In the longer term, denser packaging of the LDR signal processor chip set, either through multichip packaging or wafer-scale integration, will result in further savings.

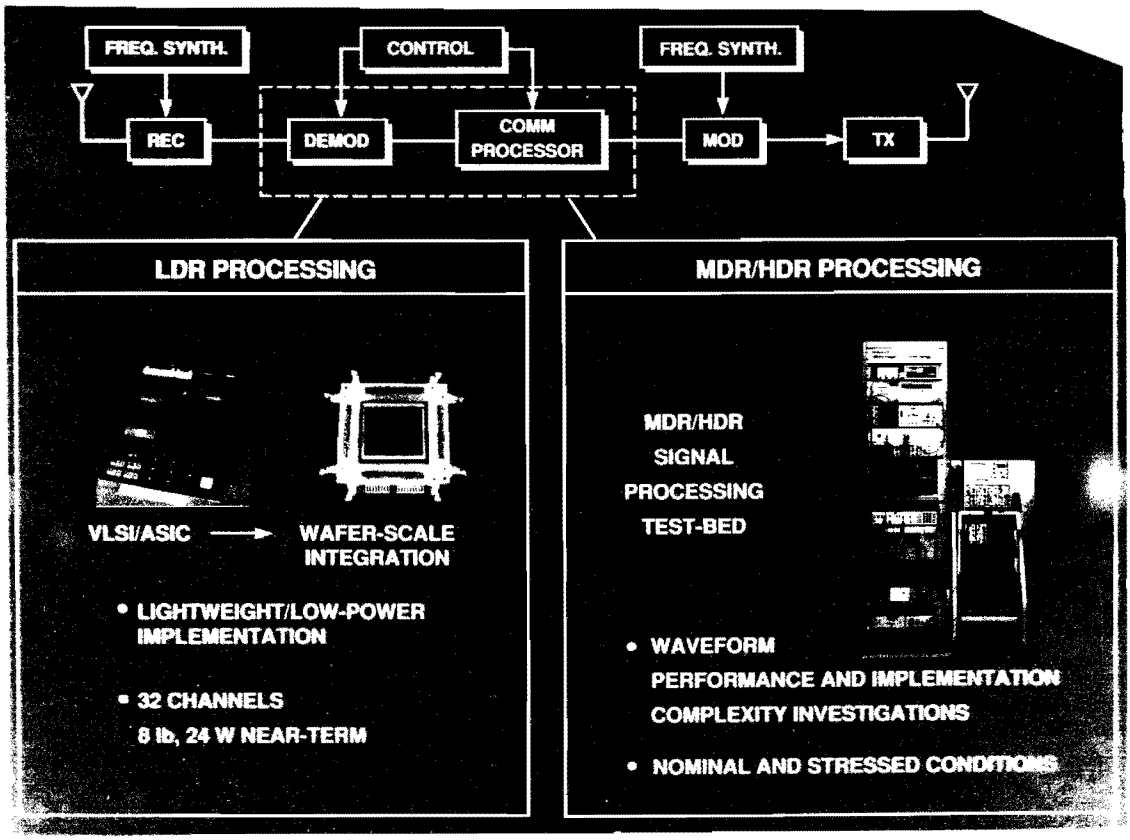


Fig. 7 LDR and MDR/HDR Signal Processing Activities

The MDR/HDR waveform at EHF will utilize a different uplink modulation than used for the LDR waveform due to the much higher MDR/HDR burst rates required. Candidate waveforms are being investigated in an end-to-end signal processor test-bed (see Fig. 7) to examine the complexity and performance of various MDR/HDR waveforms in nominal and stressed environments. Programmable gate arrays have been incorporated into the test-bed to provide the capability to assess the performance of different types of demodulators utilizing the same hardware. When appropriate MDR/HDR waveforms have been selected, they will also benefit from the low weight and power configurations which can be realized using ASIC's.

In the area of 20 GHz transmitters, progress has been made in developing solid state devices with modest power outputs and high efficiencies. Fig. 8 shows the expected efficiency of a 0.25 W module ranging from 20 to 35% depending on the type of device used to implement the module. Very small, lightweight transmitters can be made with either FETs or permeable base

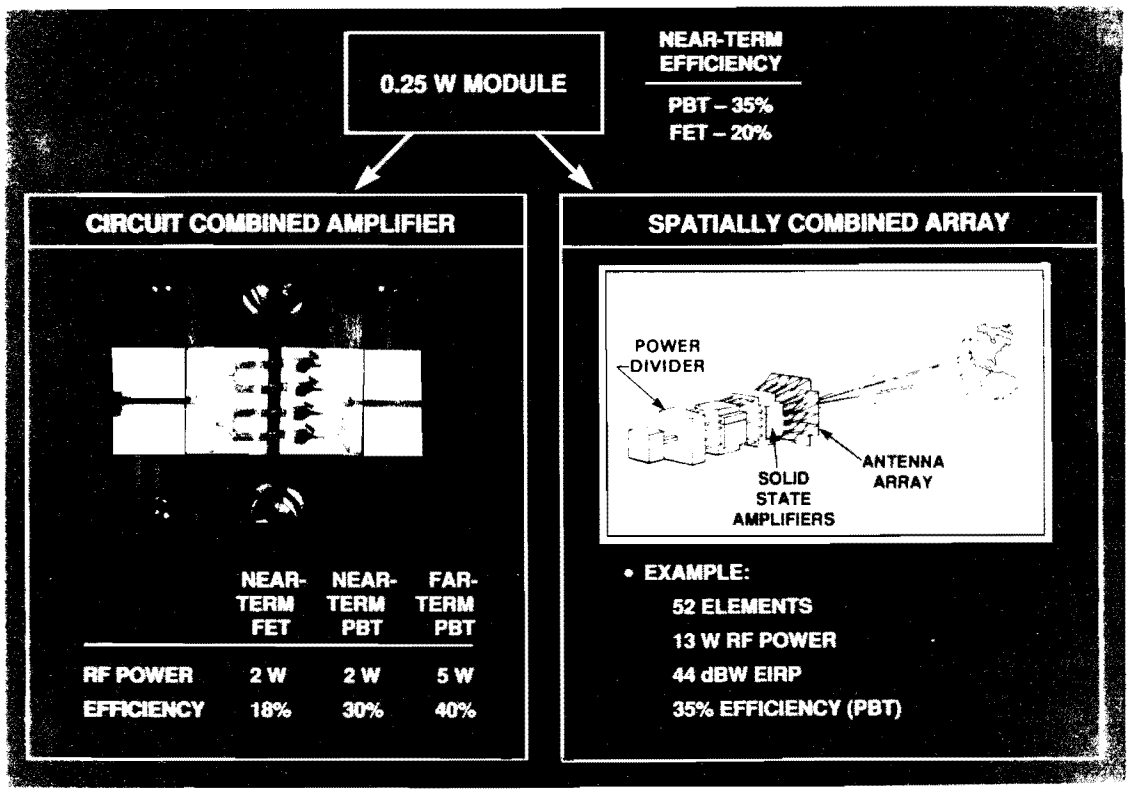


Fig. 8 Reliable, Efficient 20 GHz Power Generation

transistors (PBTs) by circuit combining the output powers of multiple 0.25 W modules. Near term transmitter outputs of 2 W are expected with efficiencies 18% for an FET amplifier and 30% for a PBT amplifier. The power output levels and the device efficiencies of the PBTs are expected to improve more than for FETs in the far-term. As can be seen in Fig. 8, a 5 W PBT transmitter is expected to achieve a 40% efficiency in the far term (~5 years).

For higher transmit powers, spatial combining (see Fig. 8) of many low power modules, for example, in an electronically steerable transmit array, can lead to high EIRP levels. The ability of such a transmit array to dynamically point the downlink beam to an arbitrary location within the FOV matches well with the flexibility in coverage provided by the agile, adaptive uplink antenna described earlier. As an example, an array of 52 horns each with a 0.25 W module can generate a peak EIRP (worst case) of 44 dBW in a beam with a half power beamwidth of 3°. This EIRP is sufficient to support many LDR channels, several MDR or HDR channels, or a mixture of channel types.

## EXAMPLE LIGHTWEIGHT EHF PAYLOADS

An example LDR payload which incorporates many of the technologies described above, is illustrated in Fig. 9. This payload, which has two antenna beams, is designed for use in an inclined, elliptical orbit . The first beam is formed by a pair of broad coverage horns which provide essentially "earth coverage" service. The second beam is provided by a wide scanning, variable beamwidth antenna which can form a spot beam with a 4° to about a 20° coverage pattern. As the satellite ascends to and descends from its apogee, this spot beam antenna can point over a broad field-of-view (90°) while its coverage pattern can be adjusted to provide a more constant coverage region on the earth's surface. The LDR processor provides 16 channels of service in each of these beams using the EHF common transmission format. The 2 W transmitter gives a peak EIRP in the spot beam of 34 dBW. This is sufficient to close the link at 2.4 kbps to a 2' terminal within the spot beam coverage area using 2.5% of the downlink transmitter time. The payload in Fig. 9 is estimated to weigh 85 lb and require 110 W (including 20% margins). When integrated into a satellite of total weight 280 lb and coupled with an upper stage, this payload can be deployed into a critically inclined, elliptical orbit by the Pegasus air-launched booster. The estimated orbital period for the satellite when launched in this manor is 6 hr.

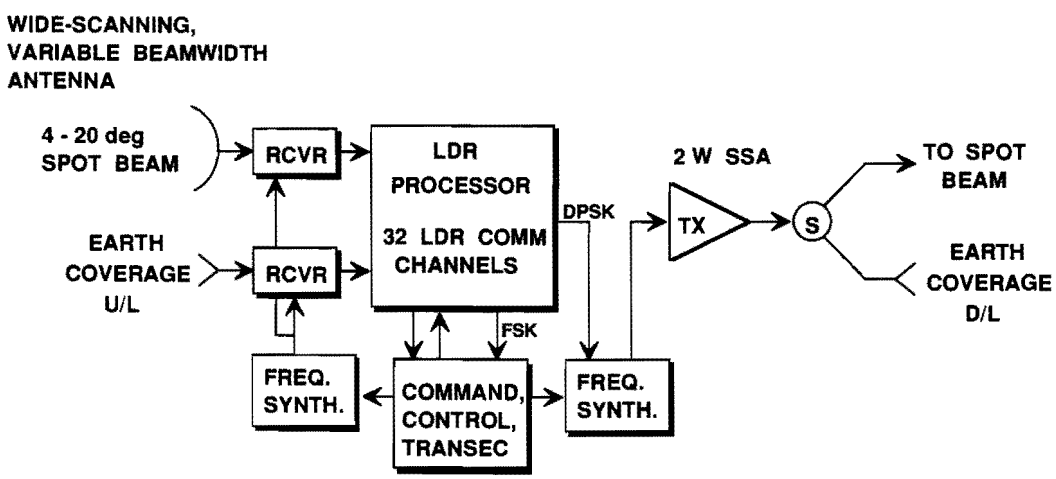


**TYPICAL LINK PERFORMANCE**

2.4 kbps with 2' TERMINAL and 2.5% of D/L

**SIZING**

| | | |
|---|---|---|
| PAYLOAD | 85 lb | 110 W |
| SATELLITE | 280 lb | 200 W |

Fig. 9 Elliptical Orbit Low Data Rate EHF Payload

The second example payload, shown in Fig. 10, provides HDR, MDR, and LDR service from geosynchronous altitude using agile, adaptive uplink and downlink antennas as described earlier. The uplink antenna system forms two beams using a 4 lens, overlapping coverage, MBA. Of the 91 total 3° beams available, 8 beams at a time are selected for further beamforming in the nulling processor. The final two beams formed can provide point coverage, 1.5° theater coverage, or agile beam coverage. The processor provides 32 LDR communications channels, 16 from the earth coverage beam and 16 from one of the agile, adaptive beams, and 2 MDR channels and 1 HDR channel (using the two agile, adaptive beams). The downlink transmit array can be used to provide point coverage, 1.5° theater coverage, agile beam coverage, or earth coverage services. It can support a mix of HDR, MDR, and LDR channels as shown in Fig. 10. This payload is estimated to weigh 195 lb and require 270 W (including 20% margins). When incorporated into a small satellite (of total weight ~540 lb) and augmented by upper stages, it is estimated this payload can be deployed to synchronous altitude orbits by the Taurus launch vehicle (SSLV).

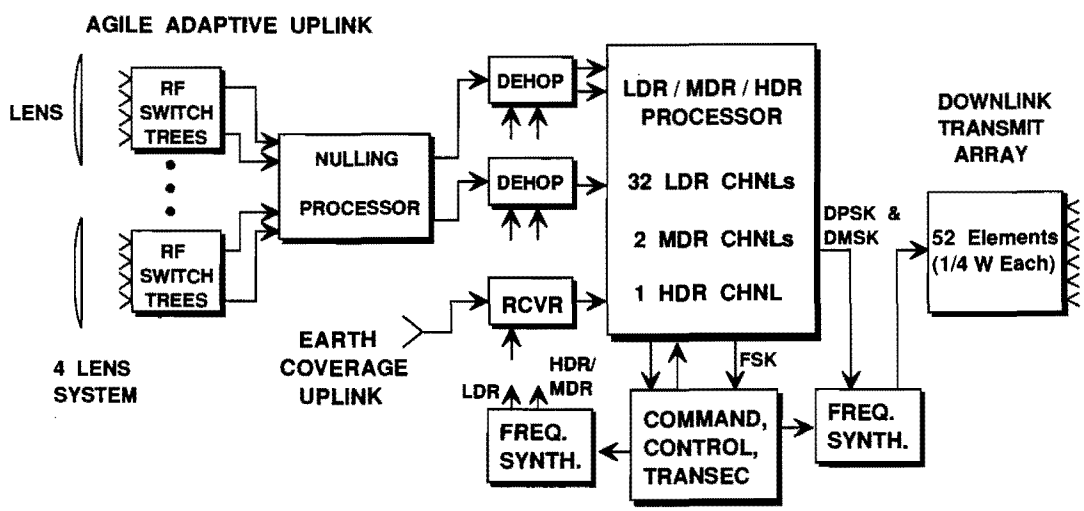


**TYPICAL LINK PERFORMANCE**

20 Mbps with 20' TERMINAL and 40% of D/L

2.5 Mbps with 8' TERMINAL and 20% of D/L

2.4 kbps with 2' TERMINAL and 0.6% of D/L

**SIZING**

| | | |
|---|---|---|
| PAYLOAD | 195 lb | 270 W |
| SATELLITE | 540 lb | 430 W |

Fig. 10 Multipurpose LDR, MDR, & HDR EHF Payload

A range of payload capabilities can be implemented using the key technologies described above. These technologies can be used to implement small satellites as in the two examples presented here. However, the same technologies can also be used in larger satellites incorporating secondary AJ payloads or multiple function AJ payloads as shown in Fig. 11. In addition, many of the same technologies are applicable for improving EHF terminals.

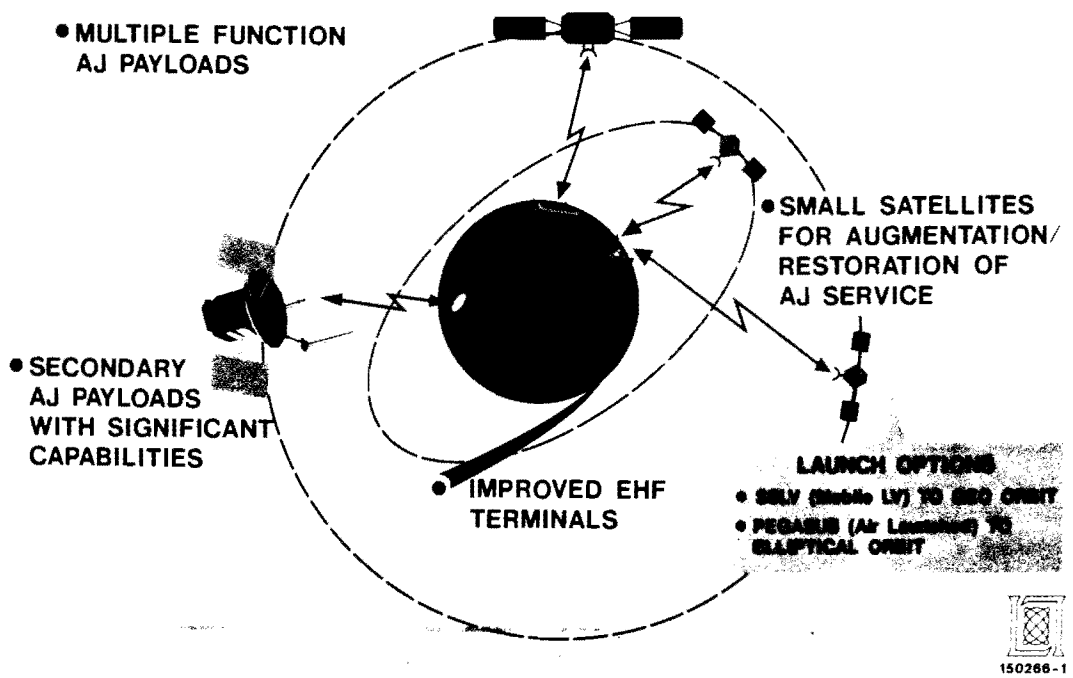


Fig. 11 Advanced Technology Utility

## SUMMARY

Lightweight EHF satellites can play a significant role in providing antijam communications. They can provide augmentation or restoration of critical services with a responsive launch capability. These small satellites provide deployment flexibility to the system by providing capacity in smaller increments, thus resulting in lower incremental costs for protected communications service. Development of the critical technologies for use in these systems has been initiated. These technology areas include advanced antennas, lightweight, low power frequency synthesizers and signal processors, and efficient solid state transmitters. Using these technologies, many useful payload configurations are possible. The lightweight payloads can then be deployed in a number of different ways.

## REFERENCES

[1] D. P. Kolba, L. L. Jeromin, D. R. McElroy, and L. N. Weiner, "Complementary Robust MILSATCOM Service: A Significant Role for Lightweight Spacecraft," Project Report SC-79, MIT Lincoln Laboratory (28 March 1989).

[2] D. R. McElroy, D. P. Kolba, M. D. Semprucci, "Small EHF Military Satellite Concept for Augmentation and Restoral," in *AIAA 13th Int. Comm. Sat. Systems Conf.*, Los Angeles, CA, (11-15 March 1990).

[3] W. C. Cummings and B. M. Potts, "A Wideband EHF Payload Utilizing an Adaptive Antenna," MILCOM 88, San Diego, CA, (23-26 October 1988).

[4] G. M. Besenyei, R. W. Chick, D. P. Kolba, R. C. King, D. R. McElroy, B. M. Potts, "Advanced MILSATCOM Payload Technologies," in *AIAA 13th Int. Comm. Sat. Systems Conf.*, Los Angeles, CA, (11-15 March 1990).