TITAN II SECONDARY PAYLOAD CAPABILITY

A. J. Butts, M. Nance and R. C. Odle

4th Annual AIAA/Utah State University
Conference on Small Satellites
Utah State University, Logan, Utah
August 27 - 30, 1990

Titan II SECONDARY PAYLOAD CAPABILITY

Aubrey J. Butts
Milo Nance
Martin Marietta Astronautics Group
Roger C. Odle
Space Systems Division, USAF

Small satellite programs are often faced with the prospect of flying as a secondary payload because of size or funding considerations. This paper discusses a concept for flying such payloads on flights already scheduled on the Titan II SLV program over the next decade. The Titan II has the capability of inserting over 4200 lbs into Low Earth Orbit (LEO) and larger payloads on ballistic trajectories from which higher orbits can be achieved when kick motors are used. Orbit changes are possible depending on the specific altitudes and payloads involved.

Of the existing 13 remaining missions currently scheduled to fly on the Titan II SLV, excess performance is available on several missions that could be used to insert secondary payloads of up to 3000 lbs into their final orbit. This paper outlines an approach that would implement a secondary payload mission and allow small satellites to schedule a launch at a predetermined date through the year 2000.

INTRODUCTION

While the demand for small satellite launch capabilities has increased over the past several years, development of launch systems to meet this demand has lagged behind. We are just now beginning to see development of new launch systems (i.e., Pegasus, Taurus) that support that demand at low cost. Throughout this decade we see indications that the demand for small satellite launch options will exceed the available supply. A number of launch opportunities presently exist on the Titan II SLV Program throughout this decade to address this shortfall.

The Titan Launch Program has an extensive background of secondary and multiple payload launches. The paper presented at this conference in 1989 entitled, "Titan II Small Mulitsatellite Mission Approach" provided an extensive description of the Titan Launch Program experience and background in the area of secondary and multiple satellite launches. This paper also described the Titan II SLV Program and the associated missions and performance capability of the three types of Titan II vehicles. Several multisatellite mission approaches were also presented. This information will not be repeated here; rather, those readers interested in this data are referred to this paper[1]. We will

deal with more specific issues in this paper associated with secondary payload opportunities in the Titan II SLV Program, i.e.;

- Launch Opportunities for Secondary Payloads,
- Secondary Payload Integration Concepts, and
- Secondary Payload Program Development

LAUNCH OPPORTUNITIES FOR SECONDARY PAYLOADS

Excess performance exists on 9 of the remaining 13 Titan II SLV launches. Fig. 1 identifies these missions grouped into four categories along with the excess performance for each category and the presently planned launch dates for each. As will be noted, excess capability ranges from 700 lbs for the Category 4 launch scheduled late in 1991 to over 3,000 lbs for three (3) Category 1 launches in 1993, 1995 and 1996. Orbital parameters are shown for each category. While the Titan Stage II vehicle remains in a ballistic trajectory in each category, both the primary and secondary payloads will be provided with additional propulsion or "kick-motor" capability. Stage II would continue on its ballistic trajectory for about 35 minutes and then re-enter.

The use of a small secondary payload bus containing the necessary avionics and propulsion hardware would be used to place the secondary payload into the desired orbit.

This paper will discuss a specific secondary payload concept dealing with a single payload in order to provide a better understanding of the Titan II SLV secondary payload capability. However, it is also possible to launch several secondary payloads and dispense them in a cluster or along a given orbital path where performance allows. This provides considerable flexibility and potential cost savings by sharing the launch costs between several secondary payload users.

SECONDARY PAYLOAD INTEGRATION CONCEPT

A Secondary Payload Concept has been developed to show one of the ways a secondary payload might be flown on a Titan II SLV mission. Our concept incorporates an upper stage utilizing a STAR 17 rocket motor. During Titan II ascent this upper stage and the attached secondary payload are contained in the Stage II payload compartment (Compartment 2A) under the prime payload's interface adapter (Fig. 2). Within this volume we will house the secondary payload adapter, the upper stage and the secondary payload. This concept utilizes a design which features simplicity and functionality. The system consists of Stage II modifications kits, the secondary adapter and upper stage. This hardware is mated with the secondary payload and provides all functions necessary to subsequently release the secondary payload at the proper time.

Stage II modifications are required for electrical systems, software, and the incorporation of the secondary payload adapter truss. Electrical system modifications include placing additional relays and electrical harnesses in Stage II. These modifications use existing available equipment and would be incorporated on the Titan II vehicle at Vandenberg AFB as modification kits.

The major software functions required for the secondary mission have already been incorporated into Titan II software package. Remaining modifications include the development of the software parameters (software variables which control event timing and vehicle orientation) and digital autopilot design changes to incorporate the secondary payload's mass properties and final software verification. The software verification and validation for the secondary payload mission would follow the same process used for the prime payload. This approach maximizes mission success for both the prime and secondary payloads.

Structural modification of Stage II is limited to the incorporation of the secondary payload adapter. This adapter is a truss assembled within the prime payload adapter and supports the secondary payload and is upper stage during ascent. This truss provides mounting for four separation springs and separation nuts. Our secondary payload concept is shown in Fig.'s 3 and 4.

Major functions provided by the upper stage are shown below and in the functional analysis chart in Fig. 5.

- Stage II/Upper Stage Separation
- Spin-up
- Rocket Motor Ignition
- Propulsion
- De-spin
- Secondary Payload Separation
- Upper Stage Tumble Maneuver
- Electrical and Sequencing Discretes

Existing hardware has been used to the maximum extent in developing our concept. The functions listed above can be performed with simple and inexpensive hardware. Spin-up will be performed by a simple cold-gas GN_2 system sized to provide a spin rate of 60 rpm. De-spin is accomplished by releasing two weights attached by cables to the basic structure (Yo-Yo's). nutation control is provided by a set of nutation dampers mounted around the outside edge of the upper stage.

The electrical system conceptual design and simplified schematic are shown in Fig.'s 6 and 7. The electrical system conceptual design is shown in Fig. 7. A two-fault tolerant design is provided to prevent early Upper Stage/Stage II Separation or premature operation of upper stage functions.

The upper stage structure provides a top ring frame and supporting structure for payload attachment and support. Spin stability will be enhanced by placing the heaviest components outboard of the solid rocket motor envelope and near the Secondary Payload/Upper Stage combined Center of Gravity (CG). The upper stage and secondary payload CG would be maintained on the center line of the total assembly. Spin balancing would take place at a facility near the launch site.

SECONDARY PAYLOAD MISSION DESIGN

Typically, secondary payload operation begins after the prime payload has reached a safe distance from the Titan II launch vehicle (Fig.'s 8 and 9). Prime spacecraft separation will occur 397 sec after launch using its own Reaction Control System trusters (See Fig. 9). Once the prime spacecraft is clear, Stage II begins a collision avoidance maneuver at 414 sec. This orients Stage II so that it is pointing 90° from the velocity vector. After Stage II reorients itself along the velocity vector, secondary upper stage separation from Stage II occurs at 855 sec after launch.

The upper stage will begin spin-up 5 sec after separation at 860 sec. Once burnout occurs, the upper stage and the secondary payload will be allowed to coast in order for the nutation control dampers to minimize the coning imparted during the upper stage burn. The payload's designed spin rate is achieved by releasing at de-spin weights at 1300 sec. Secondary payload separation from the upper stage will occur at 1331 sec. Thirty seconds after separation, a tumble weight will be released from the upper stage to ensure it will not recontact the secondary payload.

SECONDARY PAYLOAD PERFORMANCE ASSESSMENT

The secondary payload capability of various Star motors is shown below based upon bringing the secondary payload to a circular orbit for the Category 3 Mission (See Fig. 1).

The motor sizing of a Star 17 permits changing the orbit of a 180 lb payload from 391 nmi by -1298 nmi trajectory to a 390 nmi circular orbit. The final orbit of the payload using this scenario would be 390 nmi circular at 99° inclination.

Table 1

SECONDARY PAYLOAD CAPABILITY FOR CATEGORY 3 MISSION

Motor	Secondary Payload Capability (lbs)
Star 13B	69
Star 17	180
Star 17A	346

ENVIRONMENTS

The environments that would be experienced by the secondary payload are listed below:

Table 2

PRELIMINARY SECONDARY PAYLOAD ENVIRONMENTAL INTERFACE

Prelaunch temperature:	58° to 65°
Overall flight temperature:	58° to 130°
Random vibration load factor:	11 grms
Maximum axial acceleration:	11 gs
Shock:	3,500 gs
Contamination:	Visually clean level 2
Acoustics:	135.1 db OASPL

The environments shown above represent a preliminary estimate of the worst environmental conditions anticipated expected during flight. These levels are more benign than those that will be experienced by the primary spacecraft.

SECONDARY PAYLOAD INTERFACES

Payload interfaces for the secondary payload in the basic configuration have been simplified. The physical interface consists of either three or four hard points at an equal distance along a 30 in. circle (90° or 120° apart). At each of these locations, a 3/8 in. separation nut is attached to a bolt extending from the secondary spacecraft. These separation nuts incorporate separation springs which will impart a relative velocity to ensure safe secondary payload separation. There are no electrical interfaces planned between the secondary payload and upper stage. However, ground access can be provided for battery changing and checkout. The secondary payload envelope can vary for each

mission as a function of prime payload differences. The overall allowable secondary payload envelope is a cylinder measuring 42 inches in diameter and 24 inches in height.

SECONDARY PAYLOAD LAUNCH SITE OPERATIONS

Launch site operations will be conducted at Vandenberg Air Force Base in California where modification kits for Stage II and the upper stage will be received, inspected, installed, and checked out (Fig. 10). At the Vehicle Assembly Building (Bldg. 8401) the ordnance circuits and secondary payload adapter/truss will be installed on the Titan II second stage and checked out. Stage II will then be transported along with Stage I to Space Launch Complex (SLC) 4 West where additional preparation and launch checks will be made. The upper stage will then be integrated with the solid rocket motor and the secondary payload. The upper stage/secondary payload assembly will be spin balanced, prepared for transportation and shipped to SLC 4W. After booster/secondary payload mate, pre-launch checks can be made.

While the prime payload is on the pad, access to the secondary payload and upper stage is achieved through two doors in the prime payload adapter. This allows access for battery charging and closeout activities for the secondary payload. The flow of secondary payload operations is designed to minimize the impacts to the prime spacecraft while still allowing for secondary payload access.

Once the secondary payload is positioned, normal prime spacecraft operations will commence. During this approximate two-week period, the prime payload will be mated and checked out or tested. The Titan II is then fueled, ordnance installed, final checks made and compartment closeout activities performed in preparation for launch.

SECONDARY PAYLOAD PROGRAM DEVELOPMENT

Titan II launch vehicle assets are managed by the Titan II Space Launch Vehicle System Program Office (SSD/MET) at Space Systems Division, Los Angeles Air Force Base, California. As manager for these assets, the SSD/MET is the focal point for all initial requests for data relating to launch services of either primary or secondary payloads. The Program Office, upon request, will provide initial assessments of system performance, schedule availability, approximate costs, and overall mission feasibility.

Once a firm requirement for Titan II launch services exists, the agency representing the payload should submit a letter requesting launch support to: SAF/AQSS, Pentagon, Washington D. C. 20330-1000; Attention: Major Wagner or Lt Col Obering, RM 4D 268. Upon approval of your request, SAF/AQSS will direct SSD/MET to support your launch requirements. The

Program Office will then act as your agent in dealing with the launch vehicle contractor (Martin Marietta Astronautics Group), the launch range, and other payload agencies as required. The Program Office will establish the necessary contractual relationship with MMAG, and will help the payloads develop launch range documentation. The Program Office will also serve as the coordinating agent for interface control documentation, and will assist the payload agency in developing any other documentation required (MOAs, MOUs, etc.).

Based on our initial analyses, Titan II is well capable of supporting many mission requirements for government and academic payloads by flying them as secondaries to "primary" satellites. The Air Force recognizes the utility and cost-effectiveness of using excess booster performance to fly secondary payload where feasible, and welcomes inquiries regarding Titan II's capability to support such missions. Address inquiries to SSD/MST, Los Angeles AFB, CA 90009-2960 or call (213) 643-1414. The point of contact is Capt John Fitzgerald.

REFERENCES

1. A. J. Butts et al., "Titan II Small Multisatellite Mission Approach," 3rd Annual AIAA/USU Conference on Small Satellites, Ogden, UT, Sept. 26-28, 1989

Titan II Mission Excess Payload Capability				
Category	1	2	3	4
Projected Launch Date	4 Qtr 94 1 Qtr 95 3 Qtr 96	1 Qtr 99	2 Qtr 93 3 Qtr 94 3 Qtr 95	4 Qtr 91
Excess Payload Capability (lbs)	3,000	2,400	1,500 min	700
Orbits Parameters Apogee Perigee Inclination	 484 -1,708 99°	 482 -1,499 99°	 464 or 484 -1283 -1299 99° 99°	 391 -1,298 98°

Figure 1 *Candidate Titan II SLV Spacecraft Missions for Secondary Payloads*

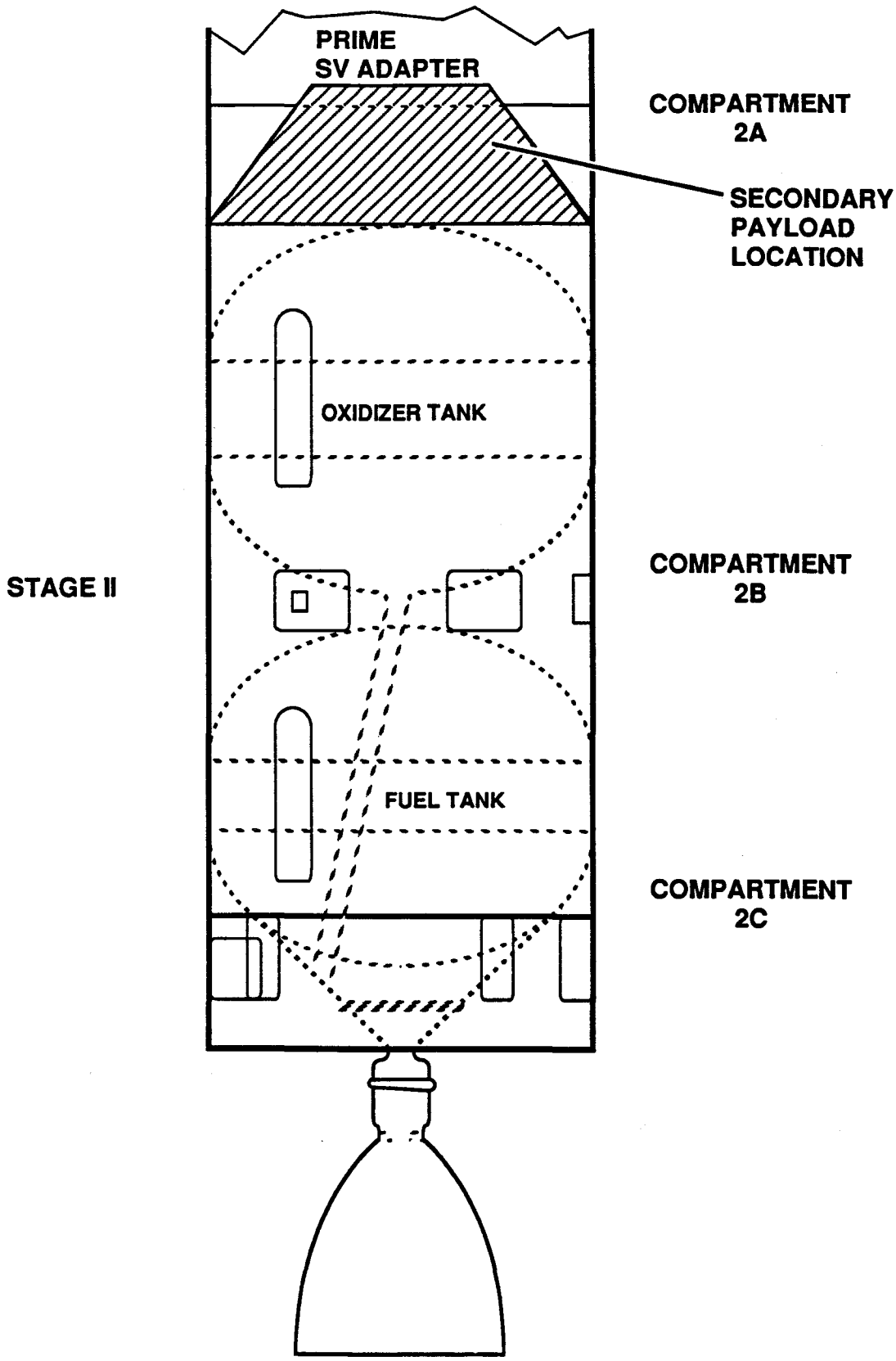

Figure 2 *T-II SLV Stage II Configuration and Location for the Secondary Payload*

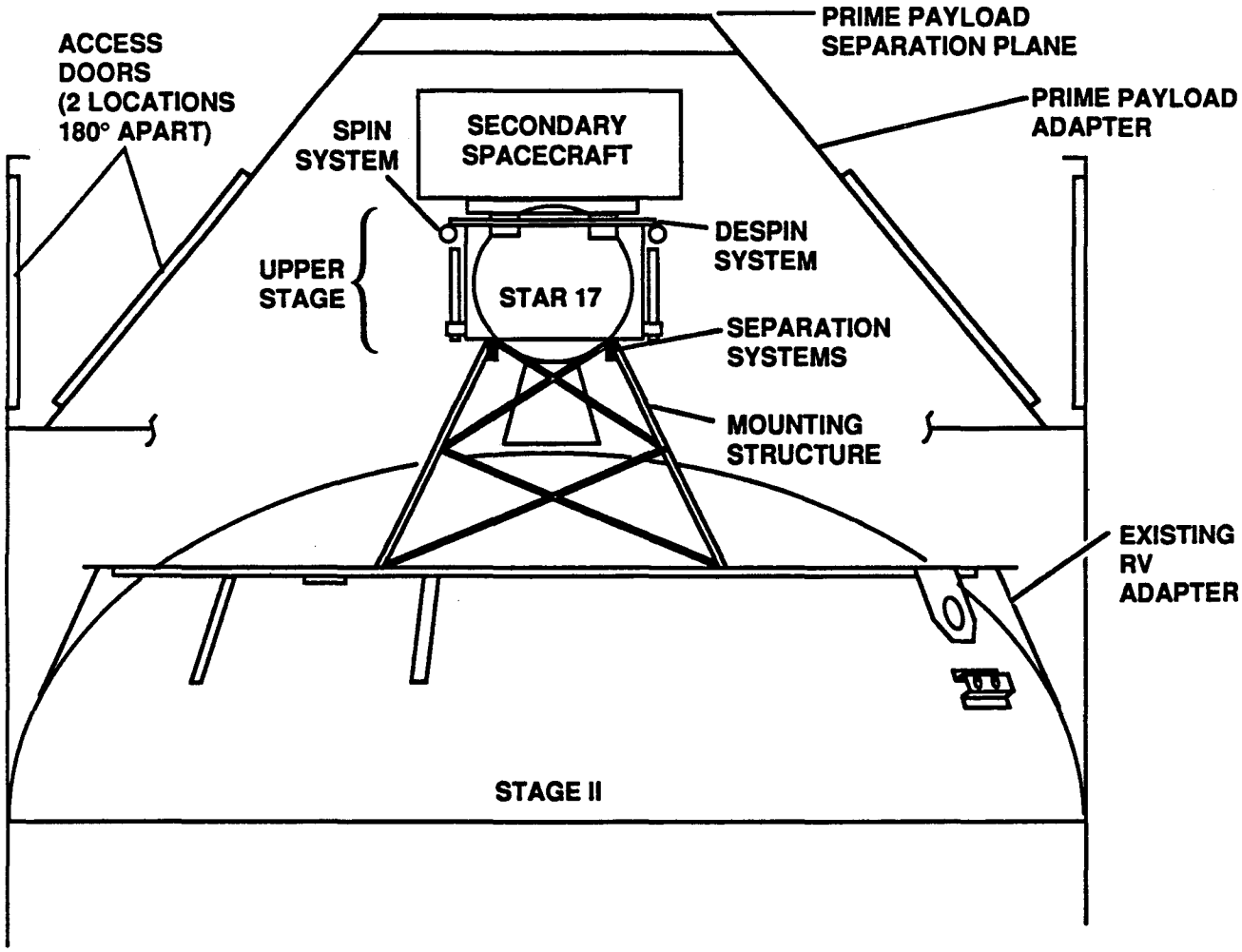

Figure 3 *T-II SLV Secondary Payload Concept*

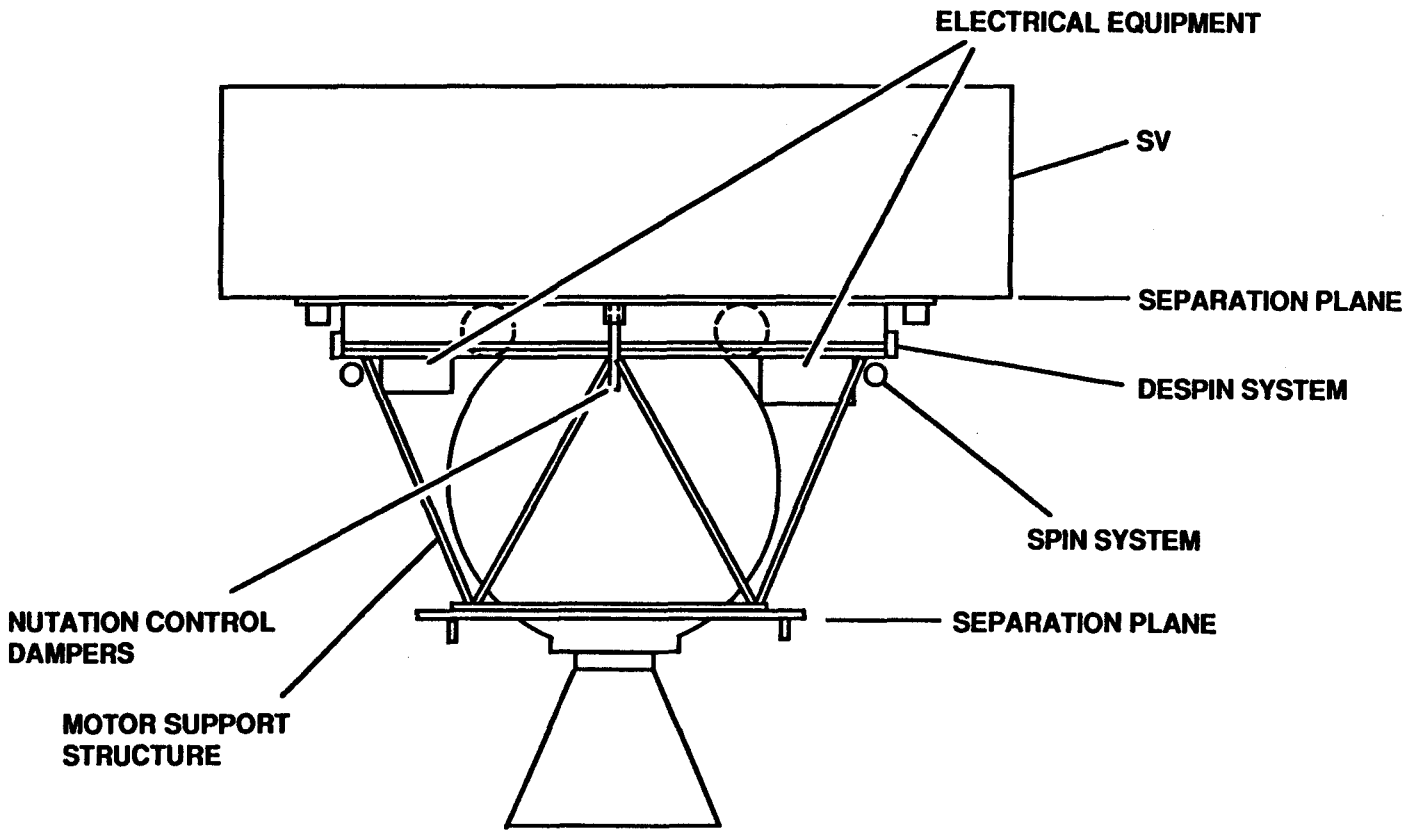

Figure 4 *Upper Stage Configuration*

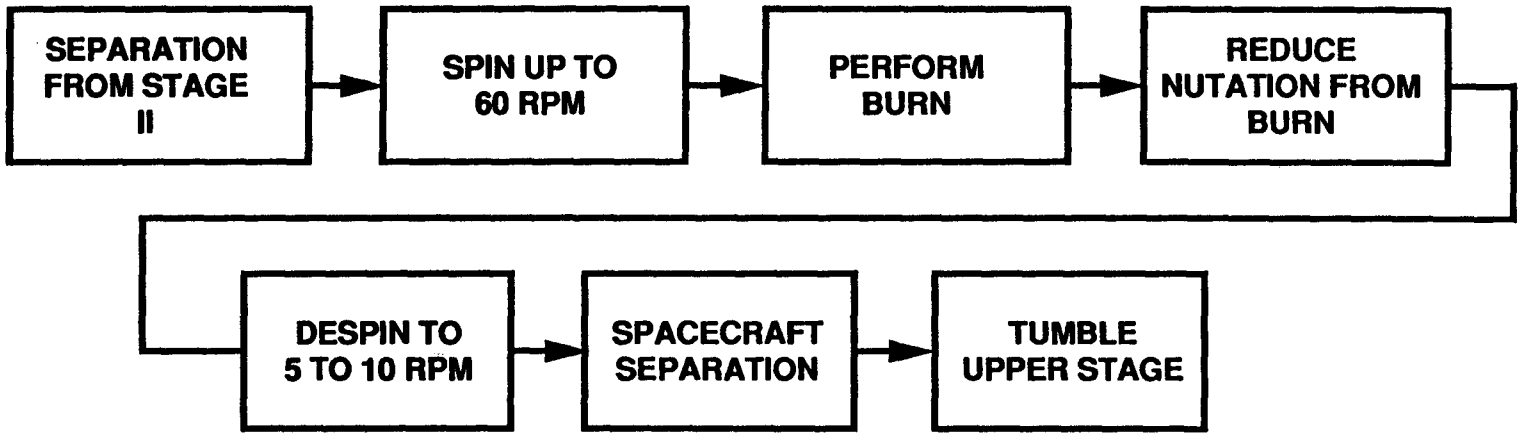

Figure 5 *Summary of Upper Stage Functional Analysis*

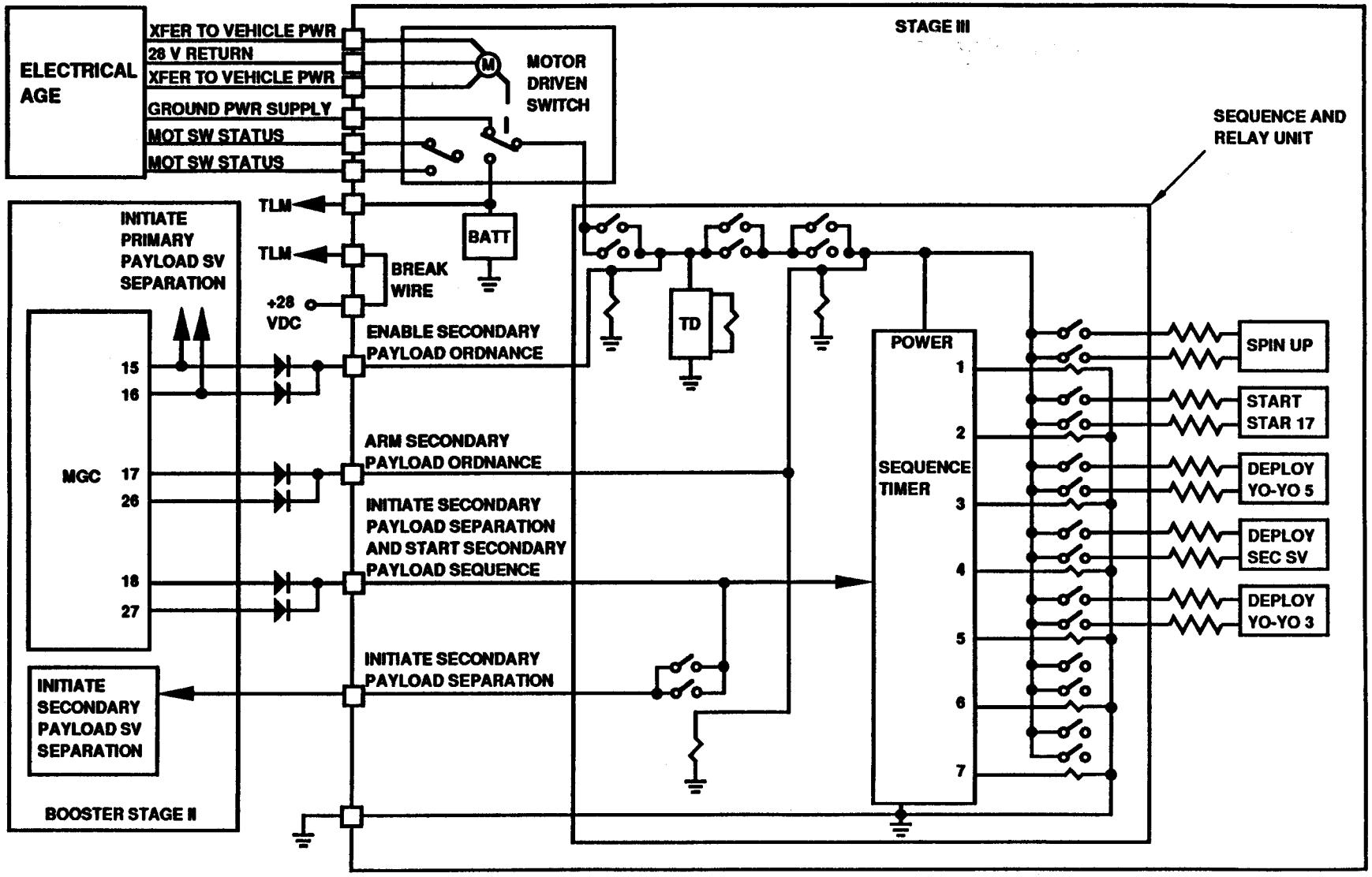

Figure 6 *Conceptual Design for Upper Stage Electrical System*

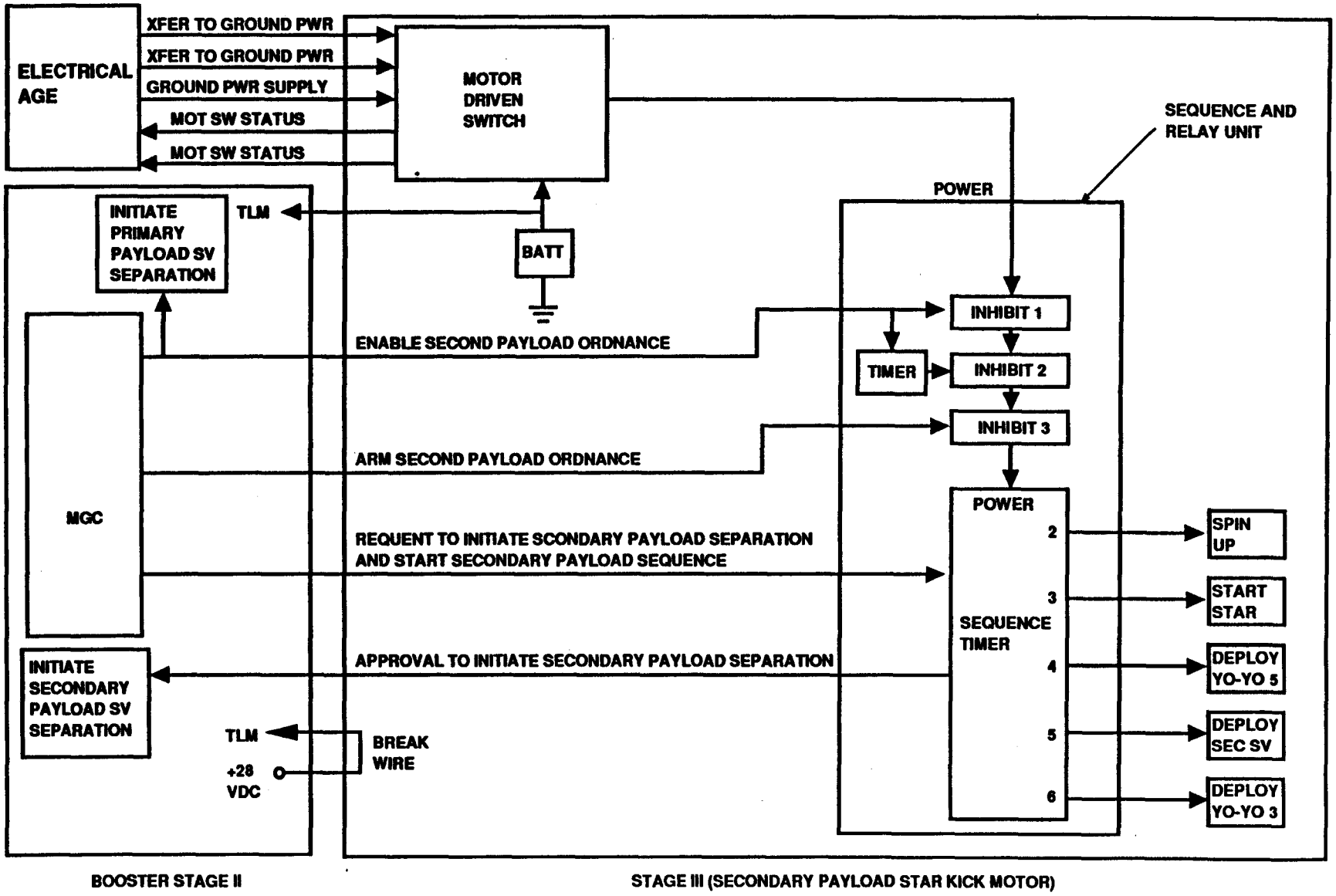

Figure 7 *Simplified Schematic for Conceptual Upper Stage Electrical System*

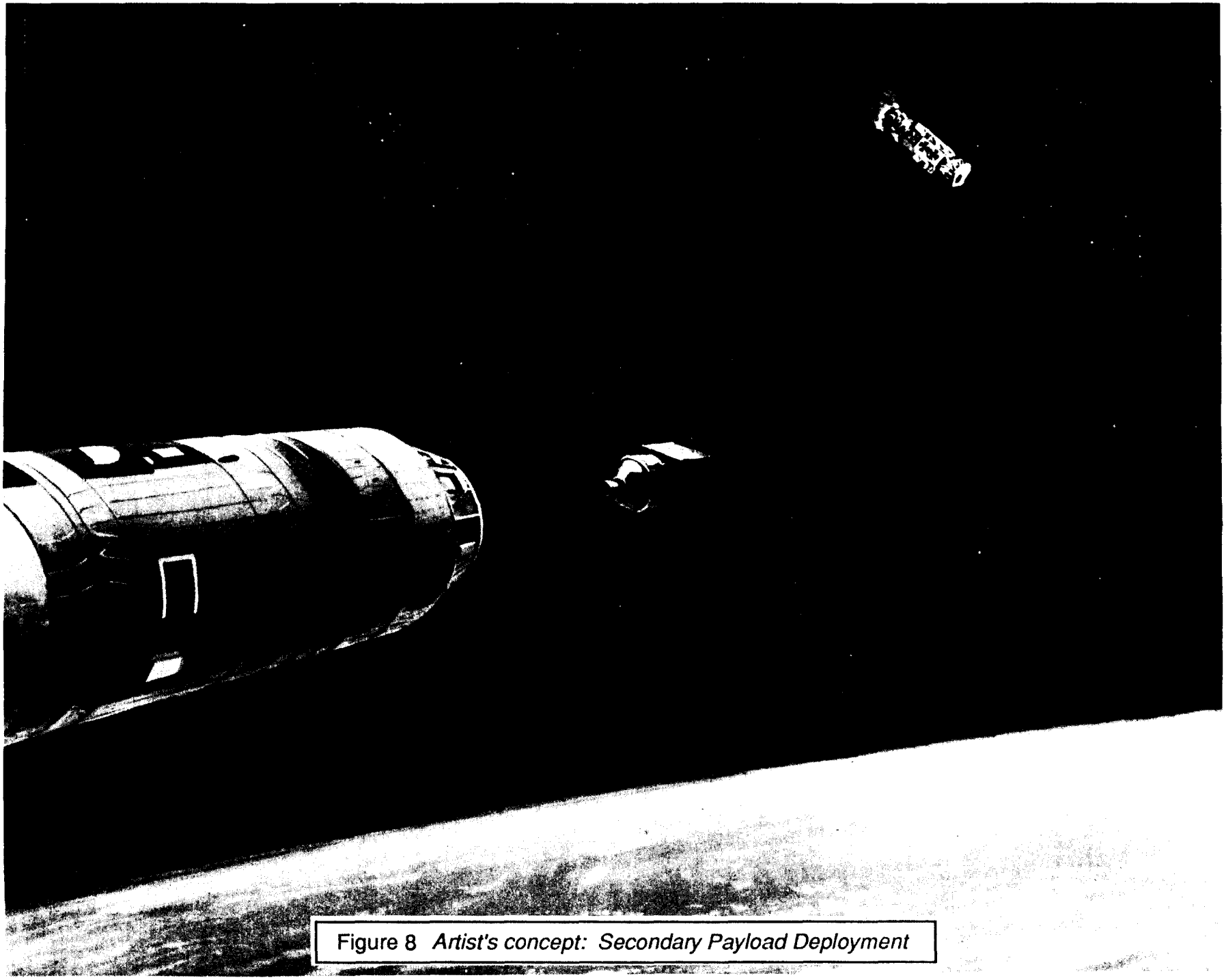

Figure 8 *Artist's concept: Secondary Payload Deployment*

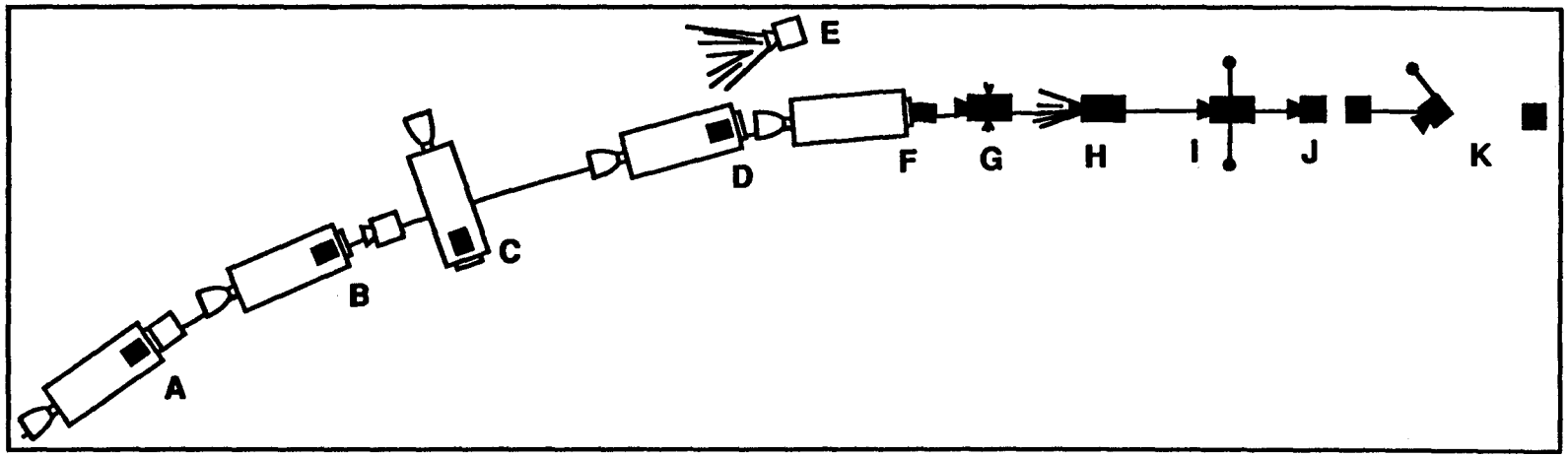

	Time (Sec)	Event		Time (Sec)	Event
A	330	Sustainer Engine Cut Off	G	860	Upper Stage Spin Up
B	397	Prime Separation	H	980	Upper Stage Burn
C	414	Collision Avoidance Maneuver	I	1,300	Despin Yo-Yo Release
D	683	Stage II Reorientation	J	1,331	Secondary Separation
E	818	Prime AKM Burn	K	1,361	Tumble Weight Deploy
F	855	Stage II/Upper Stage Separation			

Figure 9 *Typical Secondary Sequence of Events*

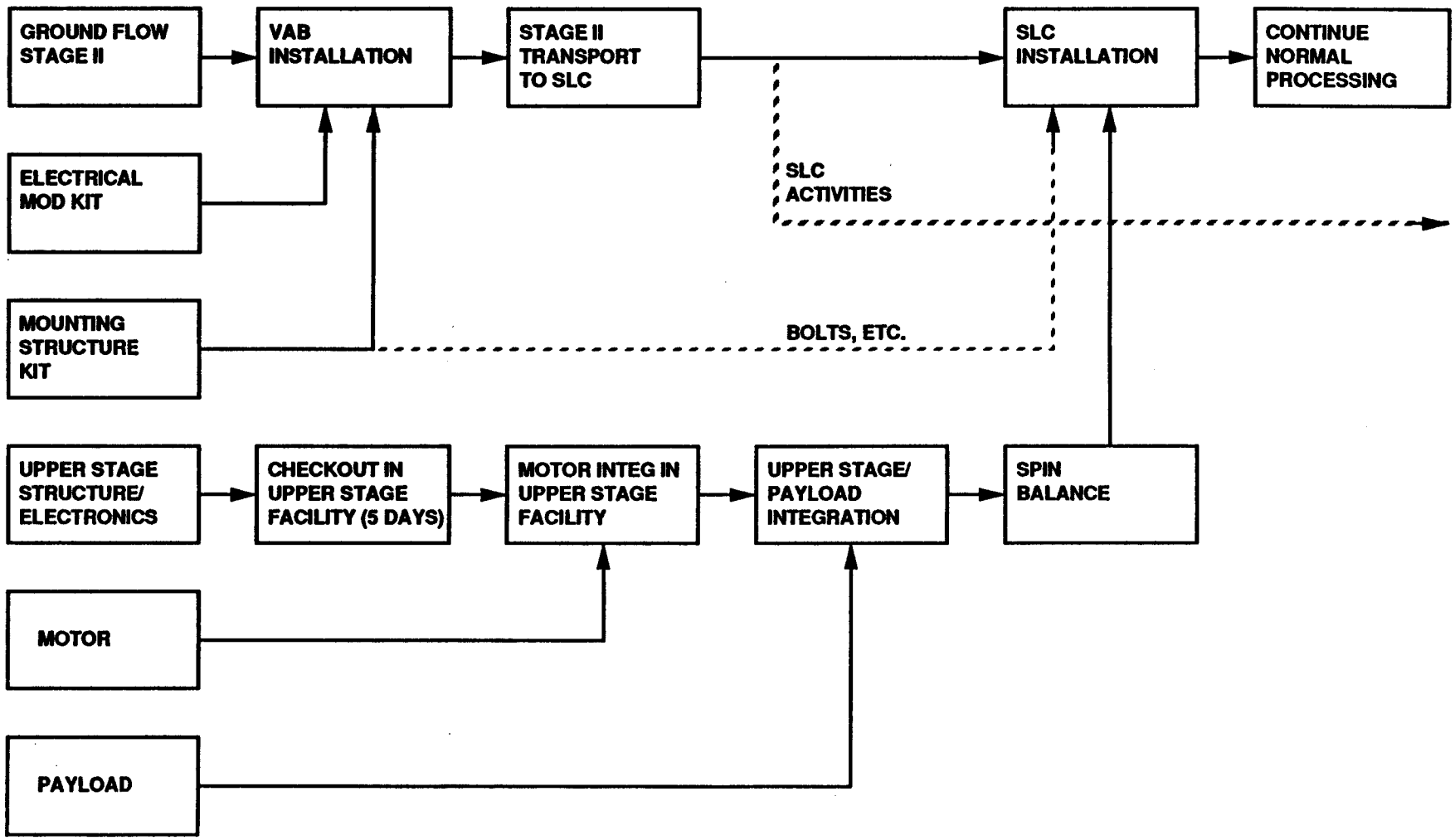

Figure 10 *Installation and Checkout –VAFB*