BREM-SAT, A Small Scientific Satellite

A. Ginati,
G. Lehmann, OHB-System
Bremen, West-Germany

H.J. Königsmann, H. Iglseder, H.J.Rath, ZARM
Bremen, West-Germany

ABSTRACT

BREM-SAT is a small scientific satellite being financed by the BMFT (German Ministry of Research and Technology). It will be launched from the Space Shuttle during the German D-2 mission (September 1992) into a 300 km orbit with 28.5° inclination.

Although the volume is limited, due to the CAP (Complex Autonomous Payload) programme requirements, the satellite payload includes six different scientific experiments. Futhermore, within this mission a new technology will be demonstrated.

The mission scenario includes three phases (Fig. 1):

- Phase I (Shuttle Phase). The first two experiments, a µg-measurement and the determination of heat conductivity of fluid mixtures, will be carried out on-board before satellite deployment.

- Phase II (Orbital Phase). The third experiment, a Dust Detector for measurement of micro meteorites, dust distribution, and man made debris will run down to an altitude of approx. 160 km. In addition, the variation of Atomic Oxygen density during this descent will be evaluated using an ESTEC TDP experiment..

- Phase III (Re-entry Phase). Two further experiments are implemented. The first one, to measure Molecular Gas-Surface interaction, and to determine the accommodation coefficients from approx. 160 km. The second one studies re-entry dynamics (pressure and temperature) from approx. 120 km. Initiation of these two experiments strongly depend on the actual air density.

This complex mission will be performed utilizing a pure electrical attitude control concept, autonomous on-board processing (using a high performance Transputer-based system), and the data collection during the critical Phase III by means of a data relay satellite.

BREM-SAT demonstrates an effective cooperation of a small company with university institutes in the field of small satellites.

INTRODUCTION

Study of re-entry dynamics in Europe is becoming very important since the Future European Program will be based on reusable systems.

ZARM (Center of Applied Space Technology and Mircrogravity) and OHB-System proposed to the BMFT at 1988 the development of a scientific low cost satellite (BREM-SAT, Fig. 2) to run six experiments within a short mission.

The BREM-SAT mission concept is a very effective way to operate a small, low cost satellite from launch to burn-out. Enhanced subsystems capabilities, necessary to meet all experiment requirements, are combined with low power consumption, small size and weight. The satellite mass is limited to 68 kg, and the 12 sided circumference has a diameter of 480 mm, and a length of 520 mm.

The master ground station is located at the Canary Islands. During the initial orbits the contact time varies from 14.5 to 22 minutes per day. If necessary, additional ground stations or a data relay satellite will be used.

EXPERIMENTS

Measurement of the Heat Conductivity of Fluid Mixtures

To accurately determine the precise heat conductivity of a fluid, thermal convection has to be eliminated. The best way to achieve this is a measurement under microgravity conditions using the method of unstationary heat wire (Ref.2). A thin platinum wire is stretched in a measurement cell. The cell is integrated into a copper block with attached Peltier elements stabilizing the temperature. Heating the platinum wire with constant power, the fluid temperature will increase. The resistance of the heat wire is a measure for the (known) thermal flow and the heat conductivity. The fluid mixture is varied by two tanks and a piston as shown in Fig. 3.

Experimental control and data storage is carried out a single chip 68070 microprocessor with 512 KB RAM. The experiment hardware has already been tested at the ZARM drop tower facilities.

Measurement of the Residual Accelerations

Simultanious to the Heat Conductivity Experiment the residual accelerations are recorded using a sensor package with a resolution of about 10^{-6} g.

Micrometeorites and Dust Detector

The MDC (Munich Dust Counter) was developed for the Japanese MUSES-A mission and is fully operational since January, 1990. BREM-SAT will complete this mission, investigating small particles in low Earth orbit. The particles mass ranges from 10^{-8} to 10^{-18} kg including man made debris from solid rocket boosters etc. The particles relative velocity is 1 to 45 km/s. By impact on a target, the particles generate a plasma, which is separated by electircal field. Charge-sensitive amplifiers connected to charge collectors record the generated signal which is preprocessed by a 80C85 microcomputer. This microcomputer transmits the data to the central on-board computer via a serial link (Ref. 3).

The recorded signals determine some characteristics of the particles such as velocity, density, and mass. The flight direction can be estimated by comparision with the attitude history of BREM-SAT.

Atomic Oxygen Experiment

As altitudes above 200 and below 700 km atmosphere consists primarily of atomic oxygen, the spacecraft motion through this residual atmospheric atomic oxygen generates a flux to the spacecraft surfaces with a significant energy in the order of 5 eV.

The incident oxygen can lead to chemical reactions with the surface material. Surface materials are oxidized and eroded, and this can sometimes lead to significant changes of surface characteristics like thermal electrical, structural, and optical properties.

A quantitative evaluation of these effects requires a reliable prediction of atomic oxygen fluences. The planned atomic oxygen experiments on the BREMSAT mission are a unique opportunity for an in-flight study of the atomic oxygen fluences and a comparison with predictions based on present MSIS-86 atmosphere models.
The predicted orbital averaged atomic oxygen fluxes are presented in Fig. 4. For a surface facing in upstream the flux ranges from 9.1×10^{14} atoms/cm^2/s for 280 km and 8.4×10^{15} atoms/cm^2/s for 170 km orbit (Ref. 4).

Measurement of Gas/Surface Interaction

With this experiment the exchange of momentum and energy between the molecular flow and the satellite is investigated using a swimming surface element. This swimming element is released and operates as a scale in normal and tangential directions to the surface. The resolution is limited to 0.01 N; the measured value depends strongly on the actual atmosheric density. First measurements are expected at 160 km altitude as analysis show. (See Fig. 5) As a result of this experiment the accommodation coefficients in normal and tangential direction are determined. Thus the satellite must slowly rotate with its spin axis normal to orbit plane (Ref. 6).

Re-entry Experiment

At the altitude of about 120 km, a 90° satellite slew maneuver will be executed, so that the pitch axis points into the direction of the velocity vector.
Thermocouple and pressure sensors mounted on the satellite cap will measure the re-entry parameter when the satellite leaves the free molecular flow region. Fig. 6 shows the BREM-SAT model in a Hypersonic wind tunnel

BREM-SAT SUBSYSTEM

Fig. 7 a diagram depicts an impression of all subsystems and the complexity of the satellite. This small and low-cost satellite is comparable to much larger and more expensive missions.

Configuration

The structure of the satellite consists of a 12 sided outer shell, a spherical cap, and the GAS Adapter. The internal crosswise structure with a platform on the top and a baseplate provides sufficient stiffness. Fig. 8 presents the BREM-SAT configuration and exploted view, showing that the interior of the satellite is equiped with the experiments and the subsystems. This configuration is optimized so that the center of gravity lies as close as possible tothe center of pressure in order to reduce the aerodynamic torque.

Power Subsystem

A silicon cell solar generator produces up to 30 W which is distributed by the Power Control Electronics. During eclipse the power is provided by a 3.5 Ah NiCd battery-pack containing 20 cells. In the first mission phase before the deployment of the satellite a 15 An Silver Zink battery is planned to be used to energize the first two experiments. This battery also serves as a redundancy for the NiCd battery, or if extended energy capabilities are needed. The BREM-SAT power bus provides unregulated 24 V, regulated +/- 15 and 5 V.

On Board Data Handling

Due to BREM-SAT's low orbit and it's reduced contact time most of the experiments and subsystem control and management must be done automatically. Thus, the on board computer is the system heart and has to meet the highest requirements of a multiphase mission controller. An INMOS T800 has been chosen for the following reasons (Ref. 7):

- full CMOS design with exellent performance to power ratio (< 2 W)
- low size and weight combined with large RAM
- high computer capability allowing the implementation of complex algorithms (magnetic field model and control laws) and star image processing

- different programming languages like Pascal, C and Occam which can be used without utilizing any operating system
- increased requirements of future missions can be met by transputer networks.

In Fig. 9 a block diagram of the OBC is shown.

Attitude Control

To enable successful operation of the six experiments, a momentum based ACS configuration was chosen.
The ACS system consists of a single fixed momentum wheel (Ithaco), torquers and flaps as actuators, sun-star sensors and a magnetometer as sensing devices.

A sun/star orientation concept for the orbital phase, with the pitch axis perpendicular to the orbit plan and additional spin mode has been developed (Ref. 11).

All necessary algorithms, geomagnetic field model, attitude and position predetermination and control laws are carried out by the On Board Data Handling System.

Attitude and Orbital Dynamics

It is evident that the multi-phase concept requires detailed dynamical analysis to ensure the success of the mission. This is extremely important while operating the last two experiments shortly before end of life. Fig. 10 shows the remaining time after the Gas/Surface experiment has been started.

Acknowledgments

Many thanks to the valuable work of J. Dettmann, C. Puvogel, J. Beck and particular credit is due to M. Fuchs for the idea of creating this interesting project.

REFERENCES

1. Iglseder, H.; Rath, H.J.; Schlomm, P.
   BREM-SAT: A Small University Satellite
   ESA SP-298. ESA-Publication 1989

2. Delgado, A.; Greger, R.
   Experiment #1, D-2-BS-TN-101-ZA

3. Iglseder, H.
   Lademission beim Hochgeschwindigkeitseinschlag
   (Diss.). TU München 1986

4. Drolshagen, G.
   Atmoic Oxygen Analysis for BREM-SAT Mission
   Internal ESTEC Rep. WMA/90-2/GD/ATO

5. Hedin, A.E.
   MSIS-86 Thermospheric Model. JGR, Research
   Vol. 92, No. A5, pp. 4649-4662

6. Koppenwallner, G.; Oelze, H.
   BREM-SAT: A Small Re-entry Satellite for Rarefield Gas Dynamics Research
   17th International Symposium on Rarefield Gas Dynamics, Aachen 1990

7. Lehmann, G., Schukat, M.
   BREM-SAT Onboard Data Handling and TT&C
   ETC 1990

8. Wertz, J.R. (hrsg)
   Spacecraft Attitude Determination and Control
   D.Reidel 1978

9. Königsmann, H.J.; Jakob, F.
   BREM-SAT. Fachausschuß 2B3 "Satelliten und Sonden", Arbeitssitzung Mai 1990

10. Ginati, A.
    TUBSAT-1, Satellite Technology for educational purposes
    NASA-GAS Conference, Sep. 1988, Florida

11. Ginati, A.
    The TUBSAT-1 Attitude Control and Stabilisation System
    3rd Annual AIAA/USU conference on small satellites, Sep. 1989, UTAH

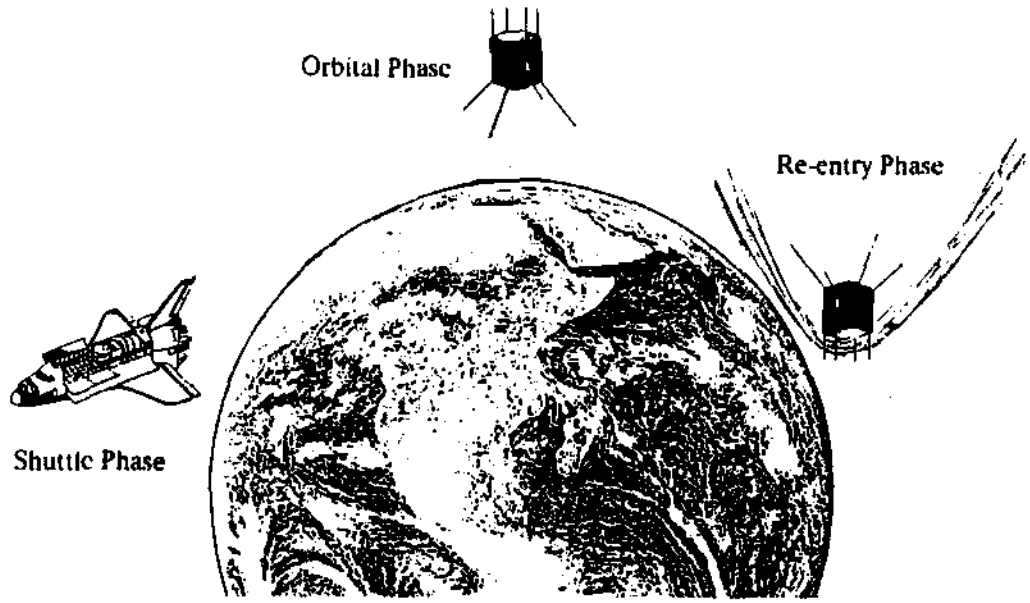

Fig. 1 BREM-SAT Multiphase Mission

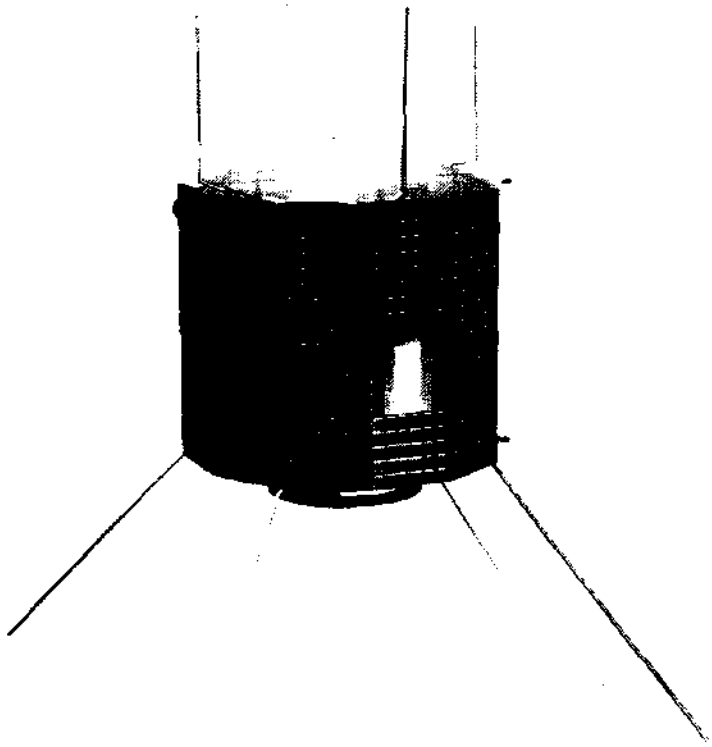

Fig. 2 BREM-SAT Spacecraft

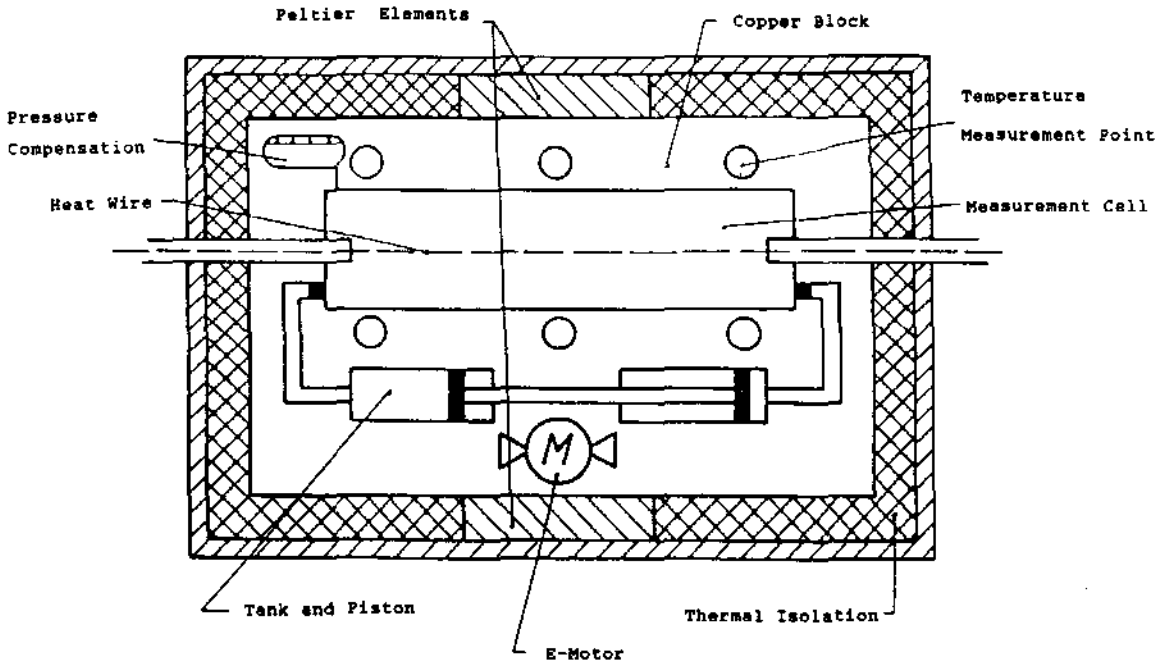

Fig. 3 Thermal Conductivity Experiment

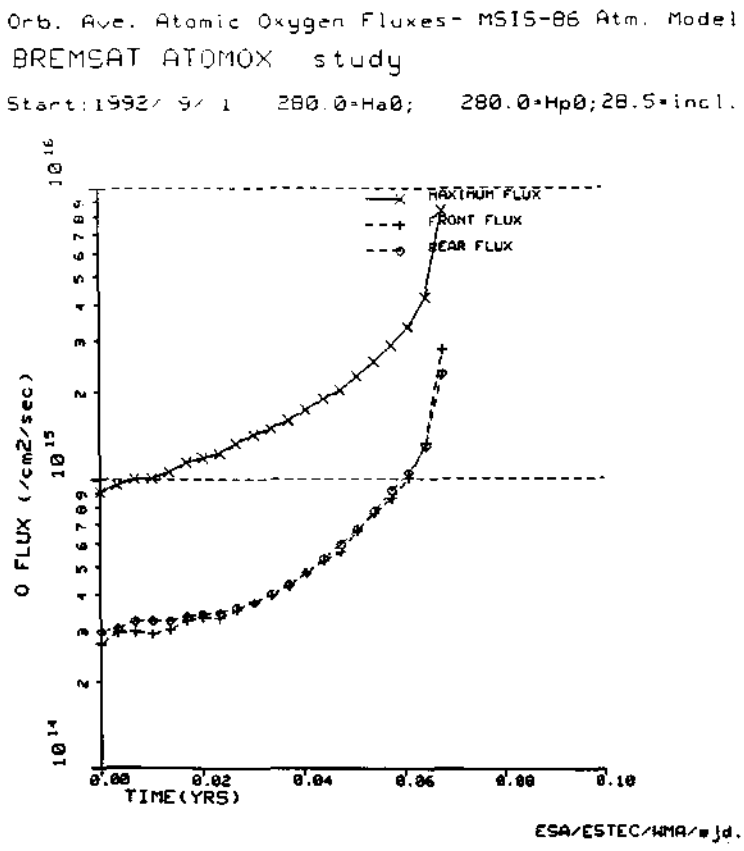

Fig. 4 Predicted Atomic Oxygen Fluxes

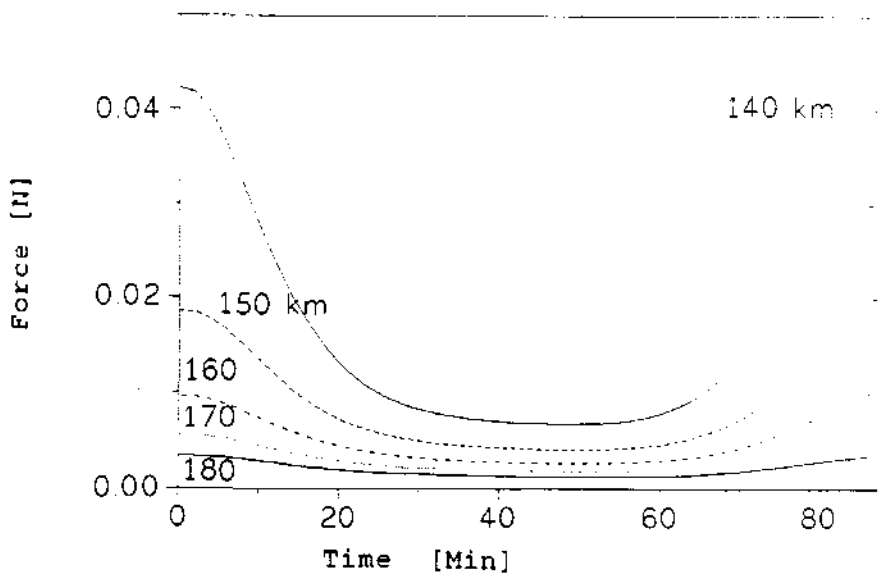

Fig. 5 Predicted Force (normal) on one Panel during one Orbit

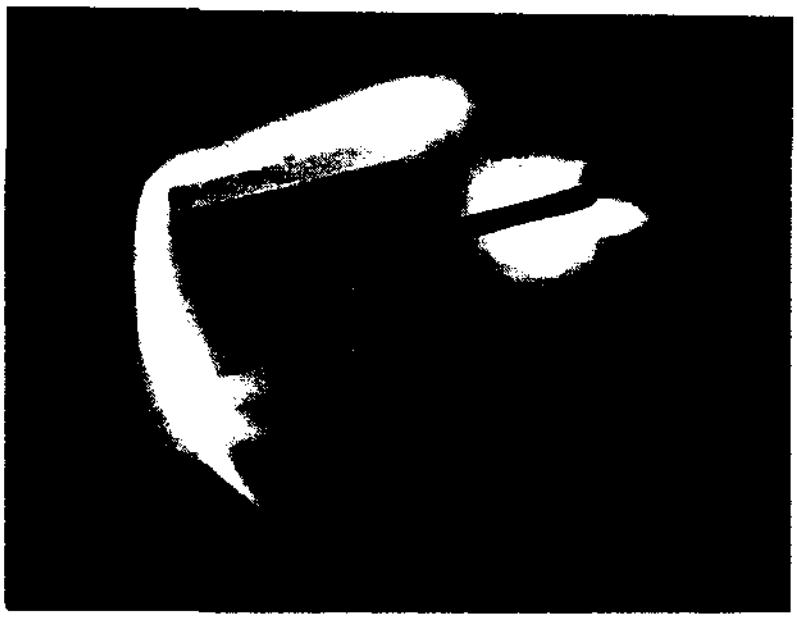

Fig. 6 BREM-SAT Model in High Speed Wind Tunnel

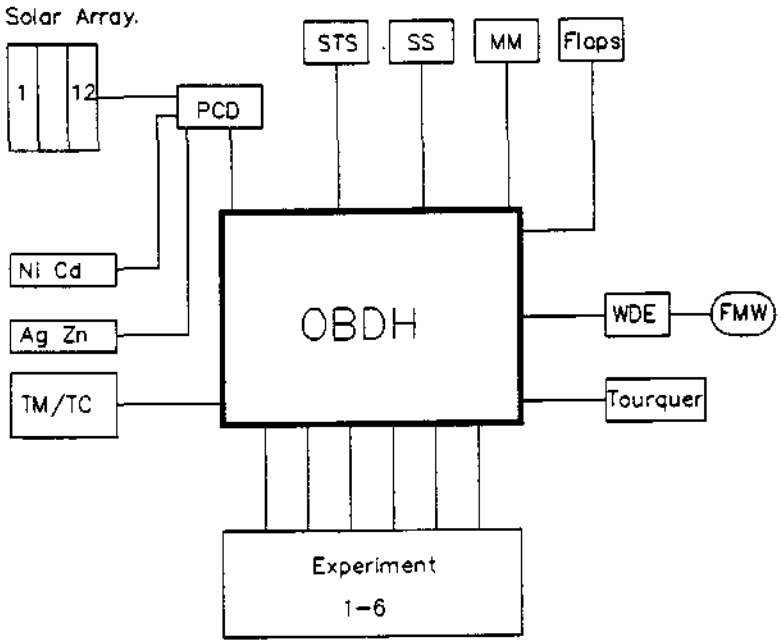

PCD – Power Control and Distribution
FMW – Fixed Momentum Wheel
WDE – Wheel Drive Electronic
STS – Star Sensor
SS – Sun Sensor
MM – Magnetometer
OBDH – On Board Data Handling

Fig. 7 **BREM-SAT System Diagram**

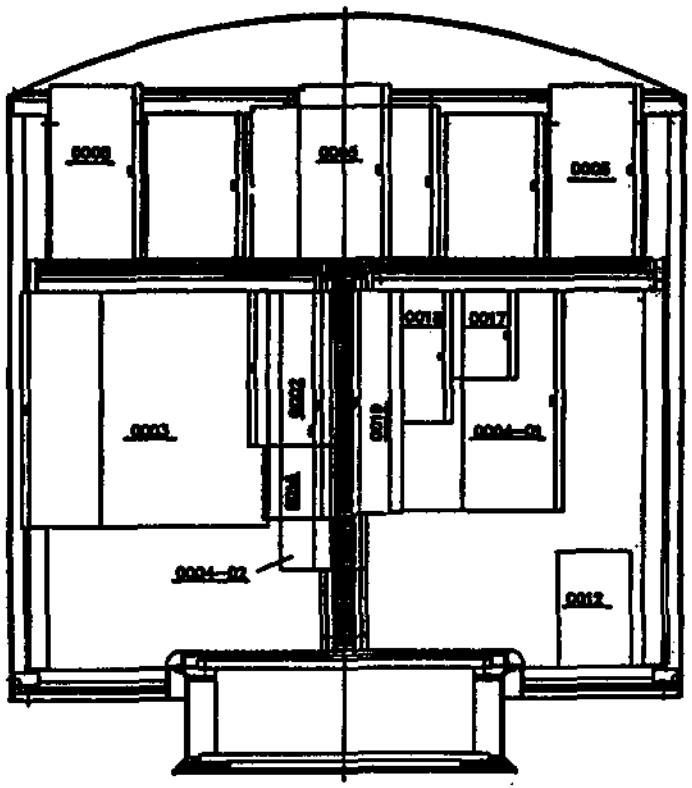

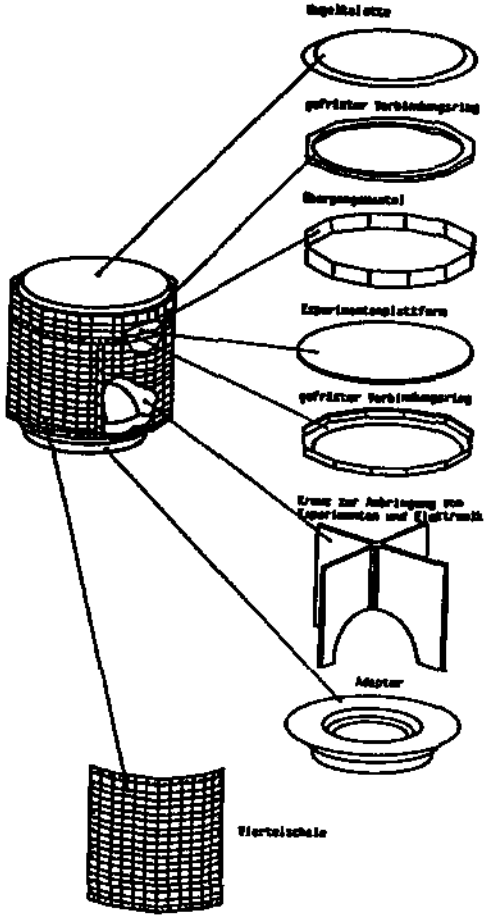

Fig. 8 BREM-SAT Configuration and exploded View

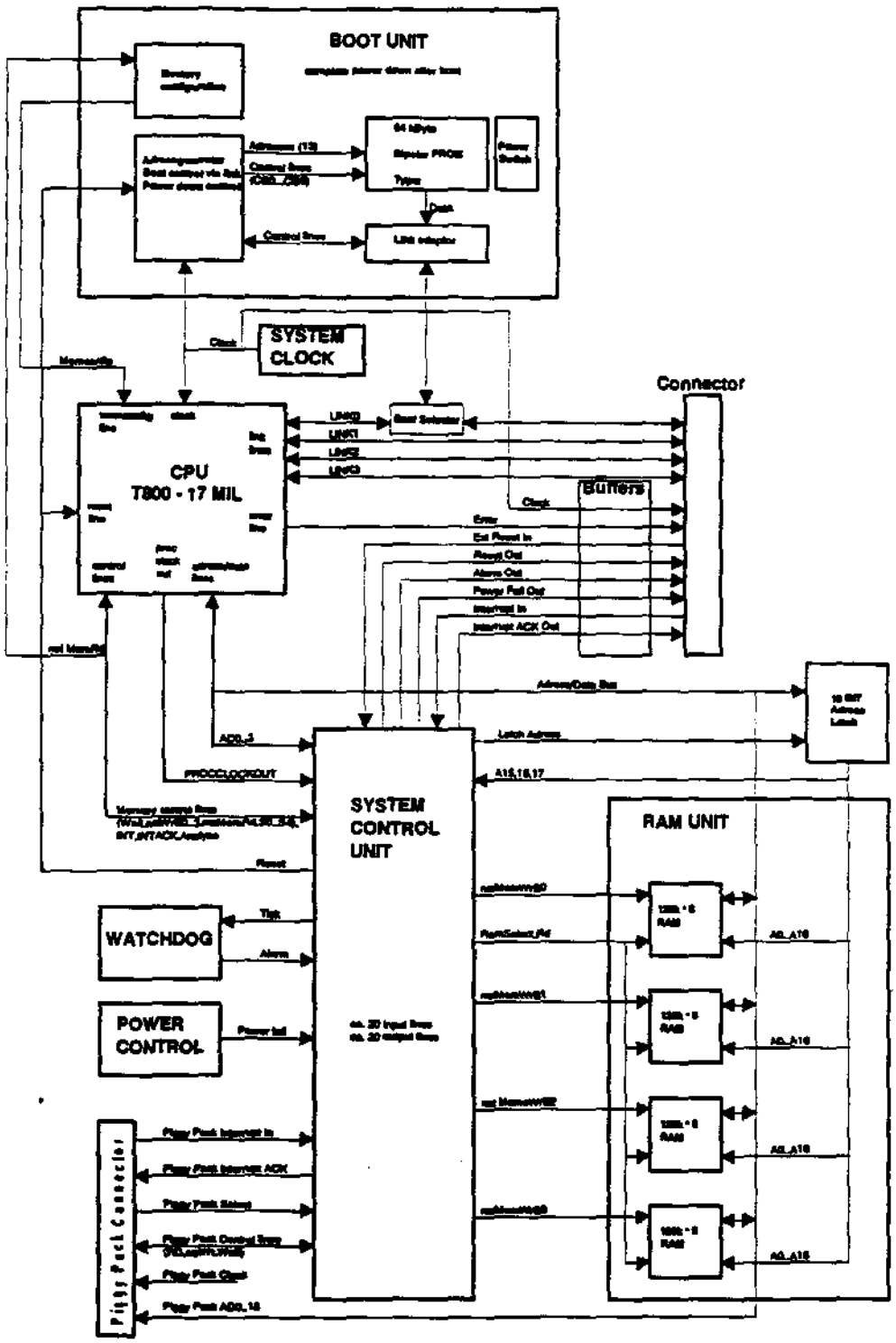

Fig. 9 BREM-SAT On-board Computer Block Diagram

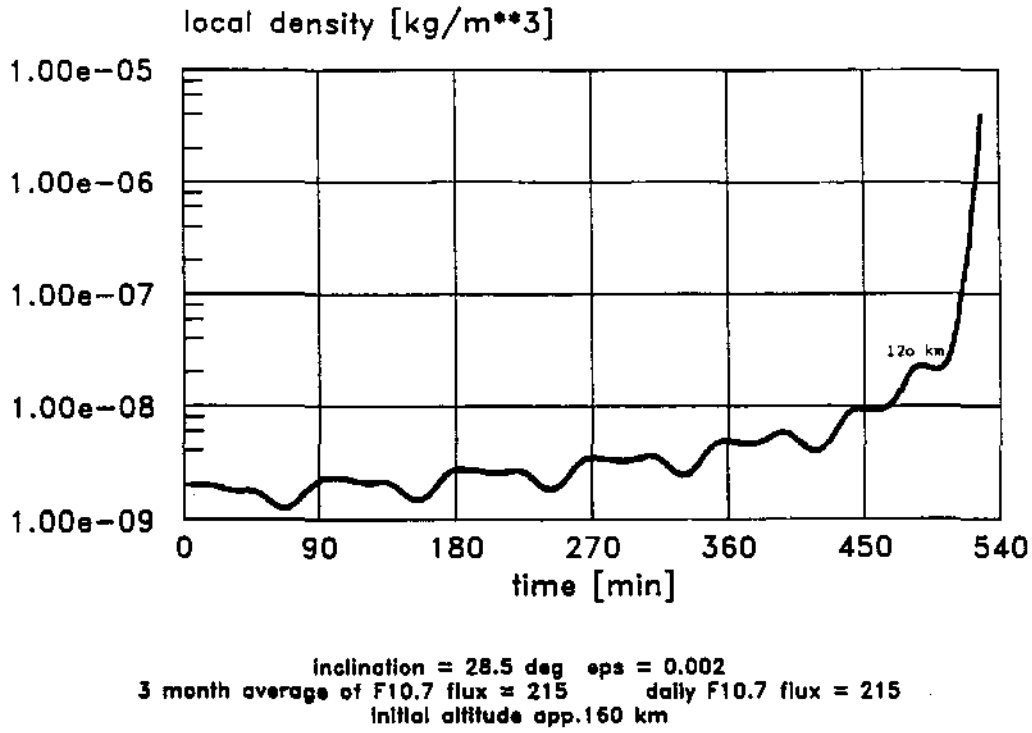

Fig. 10 Density Profile during the last Revolution