Utah State University
DigitalCommons@USU

All Graduate Theses and Dissertations | Graduate Studies, School of

1-1-2013

Assessing the Importance of Sequencing Laboratory Welding Practicums

Malcom Riley Rose
Utah State University

Recommended Citation
Rose, Malcom Riley, "Assessing the Importance of Sequencing Laboratory Welding Practicums" (2013). *All Graduate Theses and Dissertations.* Paper 1944.
http://digitalcommons.usu.edu/etd/1944

This Thesis is brought to you for free and open access by the Graduate Studies, School of at DigitalCommons@USU. It has been accepted for inclusion in All Graduate Theses and Dissertations by an authorized administrator of DigitalCommons@USU. For more information, please contact becky.thoms@usu.edu.

UtahStateUniversity
MERRILL-CAZIER LIBRARY

ASSESSING THE IMPACT OF SEQUENCING LABORATORY WELDING PRACTICUMS

by

Malcolm Rose

A thesis submitted in partial fulfillment
of the requirements for the degree

of

MASTER OF SCIENCE

in

Agricultural Systems Technology
(Secondary & Post-Secondary Agricultural Education)

Approved:

Michael L. Pate, Ph. D. Major Professor	Brian K. Warnick, Ph. D. Committee Member
Rebecca G. Lawver, Ph. D. Committee Member	Julie P. Wheeler, M. S. Committee Member

Mark McLellan
Vice President for Research and Dean of
the School of Graduate Studies

UTAH STATE UNIVERSITY
Logan, Utah

2013

Copyright © Malcolm Rose 2013

All Rights Reserved

ABSTRACT

Assessing the Importance of Sequencing Laboratory

Welding Practicums

by

Malcolm R. Rose, Master of Science

Utah State University, 2013

Major Professor: Michael L. Pate
Department: Agriculture Systems Technology and Education

The effects of mastering 1F (flat position-fillet) welds on carbon steel using a sequenced pattern of welding were examined. Participants were randomly assigned a specific practice sequence of welding for using Gas Metal Arc Welding (GMAW) and Shielded Metal Arc Welding (SMAW). A total of 71 participants (70.3%, N = 104) completed the research project. The majority of participants(95.8%, f = *69*) were male. There was no significant difference between treatment groups on the written pretest (F = .847(3), p = .473) or posttest scores (F = .669(3), p = .574). Few students (15%, f = 11) met the performance standards for passing the cracks criterion using SMAW. The majority of students were able to meet the undercut criterion standard using both GMAW and SMAW. The mean test score among all treatment groups for GMAW was 2.96 (SD = 1.04), which is 1.42 points above the mean test score for all SMAW treatment groups of 1.54 (SD = 1.36). Tukey-Kramer multiple comparison method was used to test pairwise

treatment effects. Adjusted *p*-values greater than 0.05 were considered significant. The study indicated that students perform welds that meet AWS quality standards when using the GMAW process; however, the results were not statistically significant. This project provided baseline data in understanding sequencing welding laboratory practicums by limiting operator-controlled variables. Future research should be conducted to assess the benefits of sequencing laboratory practicums while limiting variables for entry-level welding courses.

(65 pages)

PUBLIC ABSTRACT

Assessing the Importance of Sequencing Laboratory Welding Practicums

by

Malcolm Rose, Master of Science

Utah State University, 2013

The purpose of this study was to determine if having fewer operator-controlled variables during welding will improve secondary students' ability to meet weld quality standards for an AWS 1F test. Two different welding processes, Gas Metal Arc Welding and Shielded Metal Arc welding, were used in the research. The population of this study (*N* = 71), participants were randomly assigned into one of four treatment groups. The study was conducted over six class periods. Participants completed a welding pretest, taught safety procedures followed by welding instruction of both GMAW and SMAW process. Practice sessions were given for each welding process and completed in a specific order or operation. Each participant had one day (60 minutes) of practice for each process. Participants then performed AWS 1F (flat-position fillet) welds which were scored according to four grading criteria as follows: a) presence of cracks or porosity, b) complete fusion, c) fillet leg size is specified minimum, and d) undercut – not to exceed 1/32 inches. Welds were created on 3/16"X 4" flat carbon steel using Lincoln Power MIG 255 MIG welders using ER70-S electrode with 100 percent carbon dioxide shielding gas and Lincoln Invertec V275-S stick welders with E7018, 3/32" electrodes. The study indicated that students produce welds that meet AWS quality standards when

using the GMAW process; however, results were not statistically significant. Test results suggest that the majority of students were able to produce welds that met AWS quality standards with the GMAW process. This may suggest that less time is needed for practicing and testing students with the GMAW process, allowing for more time to be spent on processes more difficult for students to learn and grasp, like SMAW. We recommend extending practice sessions essential for skills to be developed and improved upon. Educational programs should allow ample time for students to practice performing skills as required by program guidelines and regulations. Mastering any technique takes time and practice. Educators should be considerate of each student and assess their individual needs and requirements.

ACKNOWLEDGMENTS

This research was made possible by the support of the Wasatch County School district and the Wasatch High School administration. Their support allowed me to conduct this research during normally scheduled classroom hours. I would also like to thank all the students who graciously volunteered to participate in this research study. I am so grateful for their patience with the schedule of the research project.

I would like to express my appreciation to Dr. Michael Pate for his valuable and constructive suggestions during the entire planning and development of this research project. His willingness to give his time so generously has been very much appreciated. I would also like to thank my committee members, Brian K. Warnick, Rebecca G. Lawver, and Julie Wheeler, for all of the support, encouragement, and assistance that they gave me throughout the entire process. Special thanks to Xin Dai for her patience and continual support throughout the data analysis process.

Malcolm Rose

CONTENTS

Page

ABSTRACT……...…….…….…… iii

PUBLIC ABSTRACT……. v

ACKNOWLEDGMENTS……. vii

LIST OF TABLES ……..……. x

LIST OF FIGURES……..……..…… xi

CHAPTER

I. INTRODUCTION……...……..……. 1

Statement of the Problem……..……..……..... 3
Assumptions……. 4
Limitations…… 4
Definitions of Terms……. 5

II. THEORETICAL FRAMEWORK…….. 7

Purpose…..……... 11
Objectives…….…….…….. 11
Null Hypothesis…… 12

III. METHODOLOGY…...……..……...……. 13

Participants...…….…….. 13
Project Design…….…… 13
Treatments……. 14
Instrument…….…… 18
Data Analysis….…… 19

IV. RESULTS…….. 20

V. SUMMARY, CONCLUSIONS, and RECOMMENDATIONS…… 27

Summary of Study…….. 27
Conclusions…….. 27
Objective 1……....……..... 28
Objective 2.....……..... 29

Null Hypothesis……..... 31
Recommendations for Practice…… 31
Recommendations for Future Research..... 34

REFERENCES…….. 36

APPENDICES…… 39

A. Performance Qualification Checklist……. 40
B. Pretest Questions…… 42
C. Posttest Questions…… 48

LIST OF TABLES

Table		Page
1	Schedule of Events – Practice (P) and Test (T)……	15
2	Average Age of Students by Treatment Group……	20
3	Weld Quality Criterion Pass Rate for GMAW Welding Test by Treatment Group ……..……...	21
4	Weld Quality Criterion Pass Rate for SMAW Welding Test by Treatment Group…….	22
5	Estimated GMAW and SMAW Scores by Treatment ……	23
6	Treatment Effects on GMAW and SMAW Scores…….....	25
7	Average Pretest and Posttest Scores by Treatment Group…….	26

LIST OF FIGURES

Figure		Page
1	American Welding Society 1F (Flat-Position) Weld..……	11
2	Weld test coupon…….……	16
3	Lincoln Invertec 255……..	17
4	Lincoln Power-MIG 256……	17
5	GMAW weld test coupon……..	22
6	SMAW weld test coupon……	23

CHAPTER I

INTRODUCTION

Obtaining expertise, the highest level of proficiency in a motor skill, generally requires years of practice (Ericsson & Lehmann, 1996). Practice is generally considered to be the single most important factor responsible for the permanent improvement in the ability to perform a motor skill (Williams & Hodges, 2005). Simon and Chase (1973) suggested that an excess of 10,000 hours of practice was required to become proficient in a motor skill. Learning to acquire a motor skill requires relevant instructions in controlled coordinated movement sequences (Wulf, HÖß, & Prinz, 1998). Typically instruction is focused on correct movement patterns through teacher lead demonstrations and supervised laboratory practicums (Wulf et al., 1998). Factors such as available classroom time and laboratory equipment can limit the amount of time available for practice. This has placed added emphasis on teachers to maximize the time used for practicing motor skills (Guadagnoli & Lee, 2004).

Wulf et al. (1998) explained that the majority of motor skill instruction placed high emphasis on the coordination and placement of the performer's body movements. This has been described as having learners focus internally on themselves during the practice session. However, Wulf et al. (1998) found that giving instructions directed towards having the performer focus on the changes in the environment resulting from their movements rather than focusing on a particular body movements improved participants' ability to master the motor skill. This has been described as having learners focus externally on the product of the movements during the practice session.

Welding, as indicated by the American Welding Society (AWS), is a very sophisticated and technical science, requiring not only mental application, but also tactile manipulation (AWS, 2005, 2006). Moore (2010) stated that there are process controlled and operator controlled variables that determine the quality of an acceptable weld. Process controlled variables are base metal, welding process, and joint design. Operator-controlled variables include travel speed, work angle, arc length, and travel angle. Hoffman, Dahle, and Fisher (2012) explained operator-controlled variables in greater detail as related to weld quality. Travel speed is welder-controlled and has a high degree of influence on weld bead shape, penetration, and fusion. Work angle is a variable angle of the electrode in an adjacent position to the work piece which controls the flow of the weld. Arc length is the distance from the end of the welding electrode to the weld puddle. The angle in relation to the direction of travel is referred as travel angle. Cumulatively operator-controlled variables are referred to as welding technique. Operator-controlled variables are dependent on controlled coordinated movement sequences making efficient use of motor skill practice essential for welding instructors

With just under half of the welding workforce nearing retirement, the need for skilled workers is only getting stronger (Zalkind, 2007). The future need for competent welders should prompt educational programs to adequately train individuals for industrial assignments as punctually as possible for various levels of skill requirement. The challenge arises in high schools, universities, and technical institutions to adequately recruit and prepare younger talent (Zalkind, 2007).

To demonstrate welding competency, entry welding personnel are frequently asked to complete performance based tests. The introductory agricultural systems and

technology courses require participants to fabricate metal projects using gas metal arc welding (GMAW) and shielded metal arc welding (SMAW) processes. To demonstrate mastery of these welding processes students must perform a 1F weld (flat position-fillet), 2F weld (horizontal position-fillet), 1G weld (flat position-groove), and 2G weld (horizontal position-groove) using carbon steel (USOE, 2011). Each student may perform multiple welding practicums and spend up to 20 hours practicing each weld to gain proficiency. As indicated by Simon and Chase (1973), to accumulate 10,000 hours of practice is nonexistent in an entry-level class; therefore, reducing the amount of time it takes to become proficient in welding will aid in replacing skilled workers faster for industrial assignment.

Examining different welding approaches may be beneficial in helping shorten the preparation time of entry welders (Sgro, Field, & Freeman, 2008). The “Guide for the Training of Welding Personnel: Level I—Entry Welder” published by the AWS (2005) has a recommended welding sequence for an entry welder training program. The AWS advises instructors to teach individuals in an entry-levelcourse shielded metal arc welding (SMAW) followed by gas metal arc welding (GMAW). Although this sequence is not mandatory, the instructor, organization, or state educational authority should use a sequence that has been found to be most suited to the capabilities of the trainees.

Statement of the Problem

Pate, Warnick, and Meyers (2012) found experienced agriculture teachers perceived pre-service teacher training should focus on “managing the laboratory setting, for effective student learning” to help new and beginning teachers successfully teach a

welding course. Anecdotal evidence has shown that SMAW as the most difficult weld process to master by secondary students. GMAW requires fewer operator-controlled variables than SMAW (Hoffman et al., 2012). Having fewer operator-controlled variables during welding practice sessions should improve secondary students' ability to meet weld quality standards for an ASW 1F test (flat position-fillet tee weld). This could be accomplished by sequencing laboratory experiences so that students practice welding with GMAW first followed by SMAW. This may translate to improved student performance of SMAW.

Little research has been done to determine if reducing focus on operator-controlled variables during welding will improve students' ability to produce higher quality welds. Will sequencing welding laboratory experiences improve students' ability to meet weld quality standards?

Assumptions

It was assumed that most participants would be willing to complete the research design. Participants had full access to all the welding equipment located at the high school. It was assumed that all participants would follow the designed schedule of events during the research study.

Limitations

Caution should be used when generalizing the results of this study to other populations. This study was limited to individuals enrolled in an entry-level agricultural systems technology course in a high school setting. An additional limitation of the study

is the relative small number of participants in the study. Only individuals enrolled in the entry-level agricultural systems technology course at Wasatch High School were allowed to participate in this study. Due to attrition, the number of students participating was reduced. Attrition was contributed to by participants not completing one or more sections of the research design.

Definition of Terms

1F – Flat-position Fillet Weld

AWS – American Welding Society

Contact-To-Work-Distance – The distance from the end of the GMAW gun nozzle and the base metal being welded.

Cracks or Porosity – The presence of splits or voids in a solidified weld.

E70R-S – Welding electrode used during the GMAW process

E7018H4R – Welding electrode consisting of two parts: 1) core metal rod 2) flux outer coating used in the SMAW Process

Fillet Leg Size – The distance from the root to the toe of the weld.

Flux – Outside coating located on the electrode used in the SMAW process.

Fusion – Melting and joining of two metals.

GMAW – Gas Metal Arc Welding

Polarity – The flow of electrons from a negative state to a positive state.

SMAW – Shielded Metal Arc Welding

Welding Coupons – Piece of metal used for welding

Work Angle – The angle between the work and electrode.

Undercut - The reduction of the cross-sectional thickness of the base metal.

CHAPTER II

THEORETICAL FRAMEWORK

The theoretical framework for this study was constructed using cognitive information processing learning theory (Andre & Phye, 1986), an ecological approach to motor skill acquisition, and the role of deliberate practice for the development of expert-like motor skills.

Cognitive information processing learning theory conceptualizes learning and behavior being generated through a person's interaction with the environment, previous experiences, and current knowledge (Andre & Phye, 1986). From a cognitive information processing perspective, learning is viewed as a series of active, constructive and goal-oriented mental processes that rely heavily on the presence of metacognition (Shuell, 1986). Individuals have the ability to adapt to new learning scenarios, such as transferring between performing GMAW and SMAW, through information processing (Phye, 2005). This process begins through stimulus input either by visual or audio acting on the corresponding senses followed by pattern recognition where the stimulus input is assigned meaning (Schunk, 2008). This information is then transferred into working memory to be acted on for incorporation into long term memory storage. This regulation of information flow is controlled by executive process commonly termed as metacognition (Nelson & Narens, 1990). Through this lens, learning is a complex and dynamic progression taking shape through different types of cognitive information processing. Learning is commonly exhibited in the form of various outcomes measures such as intellectual skills, verbal information, cognitive strategies, motor skills and

attitudes depending on the type of performance desired (Gagné, 1984). Examining the development of motor skills needed for welding under the conceptualized model of a computer, the processing of information is limited by the capacity of the human mind which raw sensory information is channeled and then acted upon through the realization of a stored motor plan (Handford, Davids, Bennett, & Button, 1997). The stored motor plan is development through gradual improvements in the quality of movements attained through practice (Ericsson, Krampe, & Tesch-Römer, 1993). When designing instruction to produce desired learning outcomes internal and external conditions must be addressed (Gagné, 1984). Internal conditions are defined as learners' current mental or cognitive capabilities which typically include current knowledge stored in long term memory. External conditions are defined as environmental stimuli that support learner's cognitive processes which take shape as deliberately planned instructional interventions to promote learning.

Handford and others' (1997) view of movement coordination and skill acquisition suggested that instructors incorporate an ecological approach when designing instructional interventions. This view contends that actions may be best understood as a highly specialized relationship between the individual and the specific learning environment. Using this approach requires less focus on the internalized schemas or executive processes. Handford and others' (1997) argued that perceptual information, in the form of sensory stimuli, creates an impact on the quality and control of coordinated movements during activity. Specific movements of the performer can create additional perceptual information which may provide useful in guiding skill performance towards the most appropriate motor plan necessary for successful task execution. Examining

instruction for motor skill development through an ecological approach suggests that the organization of practice sessions should focus on the manipulation of environmental and task structures to guide students through the development of an appropriate motor skill plan (Handford et al., 1997).

Williams and Hodges (2005) suggested that to achieve excellence in any domain, individuals must spend a considerable amount of time trying to improve performance through practice-related activities. Williams and Hodges (2005) indicated through prescriptive coaching/teaching, the acquisition of motor skills will take place at a much faster pace. Having structured practices should create a positive effect on acquiring a motor skill. Guadagnoli and Lee (2004) stated learning a motor skill is intimately related to the information available and learning will be retarded by the presence of too much information. Guadagnoli and Lee (2004) suggested task performance will decrease when there is an increase in functional task difficulty. However, Guadagnoli and Lee (2004) noted individuals' information-processing capabilities can improve with practice. Ericsson and others' (1993) stated practice should be approached in such a fashion so that learners are presented a structure with clearly defined limits and properties of the perceptual-motor workspace. Ericsson and others' (1993) reported performance will be attained when laboratory training is extended over longer time periods with repeated exposure to a task, however, this does not ensure the highest levels of performance. Ericsson et al. (1993) noted inadequate performance strategies often account for the lack of improvement. Further, Ericsson and others' (1993) recommended that to assure effective learning of motor skills students need to be given explicit instructions about the best method and be supervised by an instructor. Congruent with the ecological approach,

Ericsson and others' (1993) suggested that the instructor organize the sequence of appropriate training tasks and monitor improvement to decide when transitions to more complex and challenging tasks are appropriate such as the case when transitioning students from GMAW to SMAW laboratory practicums.

To improve the effectiveness of deliberate structured practices it is suggested that students concentrate on the resulting effects of movements rather than on the movements themselves (Wulf et al., 1998). This theory suggests that performance will be disrupted if individuals are paying too much attention to one's own motor skill movements. This attention may distract from attending to perceptual information created during the activity that may improve the quality and control of coordinated movements (Handford et al., 1997). Wulf and others' (1998) study showed that focusing on external environmental factors can be more effective in learning a motor skill. Wulf et al. (1998) found that when participants were provided instructions to improve slalom skiing technique by focusing on the wheels of the simulator platform they had greater improvements in technique than did participants who were given instructions to focus on their feet. Wulf et al. (1998) also found that body-related instructions degraded performance.

The acquisition of sports skills, such as slalom skiing, is similar to learning motor skills needed for welding. Operators of welding equipment must manage complex hand-eye coordination to complete various welding positions such as overhead and vertical weld. The operator must manipulate the electrode by hand to establish and maintain the arc as well as provided a continuous steady travel over the joint to complete weld. The American Welding Society (AWS, 2005, 2006) recognizes welding has become a very sophisticated and technical science, requiring not only mental application, but also hands-

on abilities. The future need for competent welders demands that training adequately prepares individuals for industrial assignments as promptly as possible for various levels of skill development. If eliminating variables students have to control during the welding process can help in mastering AWS welding skill tests, students can be better prepare more quickly for a welding related career.

Purpose

The purpose of this study was to determine if having fewer operator-controlled factors during welding practice will improve secondary students' ability to meet weld quality standards for an AWS 1F test (flat position-fillet tee weld; see Figure 1).

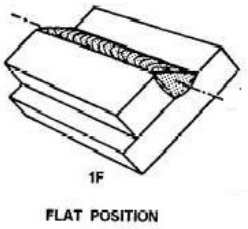

Figure 1. American Welding Society 1F (Flat-Horizontal) position.

Objectives

1. Determine the impact of sequencing welding skill laboratory practicums for GMAW and SMAW mastery of AWS standards for AWS 1F (flat-position fillet) welds.
2. Determine if limiting variables that secondary students have to control during welding practice will improve their ability to produce higher quality AWS 1F (flat position-fillet) welds using the SMAW process.

Null Hypothesis

- There will be no significant difference between treatments of welding practice sequencing on students' SMAW AWS 1F weld scores.

CHAPTER III

METHODOLOGY

The research protocol was approved under Utah State University's Institutional Review Board under protocol number 4954.

Participants

Four classes with an average of 26 students with a total of 104 students enrolled in Agricultural Systems and Technology courses at a rural school in an intermountain west state participated in this quasi-experimental design study. Students ranged from freshman to seniors in high school (14-18 years of age).

Project Design

Intact classes were utilized for this quasi-experimental study. A randomized block design was used. The experiment was performed over six class periods with a span of three calendar weeks. Each class met every other day (block schedule) for 75 minutes. Classes held on Monday were shortened by 10 minutes due to an early-out schedule with the school district. The first 15 minutes of each day was used to attend to classroom policies and procedures. During day one of the experiment, all students were given an instructor developed pretest. Each student took a teacher developed multiple choice exam with 15 questions worth 20 points that align with state standards and objectives. Questions asked student's knowledge of each welding process. The pretest was used to check for any preexisting differences that may impact test results. The differences detected were used as a covariate to explain any prior welding experience.

During day two of the experiment, all students received instruction for proper welding techniques, GMAW and SMAW machine operation. Each student received proper instruction in safety, machine set-up, and welding techniques and proper weld criteria.

Treatments

During day three of the experiment, students in each class were randomly assigned into treatment groups. A total of four treatment groups – with differences based on sequence of welding process practice sessions and sequence of welding process performance exams, were used. Table 1 is a graphical representation of the schedule of events.

The first treatment group practiced AWS 1F lap joint welds using the gas metal arc welding (GMAW) process for 60 minutes prior to practicing shielded metal arc welding (SMAW) process for 60 minutes during day four. One class following (day five) the practice session, the first treatment group was asked to first complete a welding performance exam using the SMAW process within ten minutes followed by the GMAW process within 10 minutes on day six.

The second treatment group practiced AWS 1F lap joint welds on day three using the gas metal arc welding (GMAW) process for 60 minutes prior to practicing shielded metal arc welding (SMAW) process for 60 minutes on day four. One class following the practice session (day five), the second treatment group was asked to first complete a welding performance exam using the GMAW process within ten minutes followed by the SMAW process within 10 minutes on day six.

The third treatment group practiced AWS 1F lap joint welds on day three using the shielded metal arc welding (SMAW) process for 60 minutes followed by a gas metal arc welding (GMAW) process for 60 minutes on day four. One class following the practice session (day five), the third treatment group was asked to first complete a welding performance exam using the GMAW process within ten minutes followed by the SMAW process within 10 minutes on day six.

The fourth treatment group practiced AWS 1F lap joint welds during day three using the shielded metal arc welding (SMAW) process for 60 minutes followed by gas metal arc welding process (GMAW) process for 60 minutes on day four. One day following the practice session (day five), the fourth treatment group was asked to complete a welding performance exam using the SMAW process within ten minutes followed by the GMAW process within 10 minutes on day six.

Table 1

Schedule of Events – Practice (P) and Test (T)

	Treatment 1	Treatment 2	Treatment 3	Treatment 4
Day 1	Pretest	Pretest	Pretest	Pretest
Day 2	Instruction	Instruction	Instruction	Instruction
Day 3	PGMAW	PSMAW	PGMAW	PSMAW
Day 4	PSMAW	PGMAW	PSMAW	PGMAW
Day 5	TGMAW	TSMAW	TSMAW	TGMAW
Day 6	TSMAW	TGMAW	TGMAW	TSMAW
Day 7	Posttest	Posttest	Posttest	Posttest

Day seven of the experiment, all treatment groups will be administered an instructor developed post test to determine retention of content and material. Prior to each practicing session, an instructor based demonstration was given for each welding process. The demonstration discussed and exposed students to proper machine settings, ways to properly set the weld tokens to achieve the AWS 1F position, proper bead formation and size, correct travel angles, speed and arc length. The demonstration was given for each practice session as students were asked to rotate between processes each day or the study.

As students engaged in the practice sessions, the instructor supervised providing instantaneous feedback during the welding process and immediately after each weld was completed. Students were asked to perform one practice weld and present it to the instructor for feedback. After suggestions were made, students then completed other practice welds.

Welding coupons were used from 3/16” X 4” strap carbon steel. Each coupon was two inches in length. Coupons were coded for each student and collected on each weld, for each welding process (see Figure 2). Each student received three welding coupons each day to perform four 1F welds.

Figure 2. Weld test coupon.

Fifteen Lincoln Invertec 275 welding machines, as shown in Figure 3, using Excalibur 3/32” E7018 H4R were used to perform the SMAW 1F weld tests.

Figure 3. Lincoln Invertec 275.

Eight Lincoln Power-MIG 256 welding machines using .035” E70R-S wire electrodes with 100% carbon dioxide gas in short circuit transfer mode were used to perform the GMAW 1F weld test.

Figure 4. Lincoln Power-MIG 256.

Voltage and amperage settings for each welding machine were used as specified by the machine manufacturer. Typical operating procedures recommended for the Invertec V275-S stick welders have current (amps) settings for 3/32 inch electrode using

direct current positive (DC+) 70-110. The selectable hot start feature was used during the practice and weld performance processes. Arc force was set at zero. The typical operation procedures for the Lincoln Power-MIG 255 MIG welder for a short circuit transfer using direct current positive (DC+) have a contact to work distance (CTWD) of 3/8 – ½ inches, wire feed speed (WFS) of 280 inches per minute, voltage (volts) 21, and current (amps) 175. Each group of students was randomly assigned to a welder on which they will perform each weld test. Within each group, students were rotated between metal preparations, welding, and weld critique to account for the lack of machines per student ratio.

Instrument

Each student was required to perform AWS 1F lap joint welds according to the AWS (4.8) Visual Examination Criteria before Destructive Testing rubric (AWS, 2005). Welding coupons were collected from each student. Each coupon was graded using the AWS (4.8) rubric for fillets with a total of four criteria categories based on 1) presence of cracks or porosity, 2) complete fusion, 3) fillet leg size is specified minimum, and 4) undercut – not to exceed 1/32 inches. Each category was given a score of zero for an unsatisfactory or a score of one for a satisfactory rating with a maximum possible total score of four for each coupon. For example, when the student's 1F weld coupon had an appearance of cracks or porosity, the total score for that student was three for having a satisfactory rating for complete fusion; fillet size is specified minimum, and no undercut. For grading and calculation purposes, each student was assigned an identification code. Each student's code was stamped on all welding coupons prior to welding. After the

completion of each weld, the students were required to turn in their weld coupons. A "performance qualification" grading worksheet was then filled out by the welding instructor for each test coupon. These grading worksheets were used to keep track of student performance. An example of the performance qualification worksheet may be found in Appendix A. The pretest used may be found in Appendix B. The posttest used may be found in Appendix C.

Data Analysis

Descriptive statistics including frequencies and percentages were reported for the number of students passing the four weld criteria. Means and standard deviations were reported for the pretest and posttest score. The outcomes analyzed were GMAW and SMAW exam scores for each student. Students' weld test scores were reported for each treatment group using means and standard deviations. These scores are counts of passing the four individual weld criteria for each weld test and therefore binomially distributed ($n = 4$). In the study, independent variables of interest were lab practice orders (four orders) and the dependent variables were weld test (GMAW or SMAW). Each variable and interactions were tested. Classrooms and students within each classroom were random factors in the model. All analysis was performed using PROC GLIMMIX (generalized linear mixed model) in SAS/STAT 12.1, (SAS version 9.3, SAS Institute Inc., Cary, NC). Parameter estimates were considered significant at the 0.05 level.

CHAPTER IV

RESULTS

The purpose of this study was to determine if having fewer operator-controlled variables during welding will improve secondary students' ability to meet weld quality standards for an AWS 1F test. Each students' weld coupon was graded according to an AWS rubric for fillets with a total of four criteria categories based on: (a) presence of cracks or porosity, (b) complete fusion, (c) fillet leg size is specified minimum, and (d) undercut – not to exceed 1/32 inches. Each category was given a score of zero for an unsatisfactory or a score of one for a satisfactory rating with a maximum possible total score of four for each coupon.

A total of 71 participants (70.3%, *N* = 104) completed the research project. The majority of participants were male (95.8%, *f = 69*). Participants grade level ranged from ninth grade, as 73.6 % (*f = 53)*, tenth grade as 9.7% (*f = 7)*, eleventh grade as 12.5% (*f = 9)* and twelfth grade as 2.8% (*f =2).* Ages of all participants ranged from 14 – 18 with an average age of 15 (*SD* = .971). The average ages of students assigned to each treatment group are presented in table 2.

Table 2

Average Age of Students by Treatment Group (*n* = 71)

Treatment Group	*M*	*SD*
Group 1	15.0	.375
Group 2	15.0	1.097
Group 3	15.0	1.078
Group 4	15.0	1.132

The pretest was administered to determine if there were any significant differences of content knowledge between classes. There was no significant difference between classes on the pretest scores, $F = 1.41(3)$, $p = .247$. The average pretest score for all classes was 56.01 ($SD = 13.17$) with a maximum score of 100. Students between the ages 14 and 15 scored an average of 53.21 ($SD = 12.62$) while students who were between 16 and 18 years old averaged a pretest score of 64.28 ($SD = 11.4$). This difference was significant, $t = 3.29(69)$, $p = .002$.

The weld quality criteria pass rates for the GMAW test by treatment group is presented in Table 3. Frequencies and percentage pass rates are given for each treatment group for each weld quality criterion. An example of a GMAW weld test coupon is given in Figure 5.

Table 3

Weld Quality Criterion Pass Rate for GMAW Welding Test by Treatment Group ($n = 71$)

	Criterion							
	Cracks		Fusion		Leg Size		Undercut	
Treatment	*f*	*%*	*f*	*%*	*f*	*%*	*f*	*%*
1 ($n = 19$)	16	84.2	18	94.7	11	57.9	19	100.0
2 ($n = 18$)	11	61.1	12	66.7	12	66.7	15	83.3
3 ($n = 16$)	11	68.8	8	50.0	9	56.3	14	87.5
4 ($n = 18$)	13	72.2	10	55.6	13	72.2	18	100.0

Figure 5. GMAW weld test coupon.

Weld quality criterion pass rates for the SMAW test are presented in Table 4. Frequencies and percentage pass rates are also given for each treatment group per each grading criteria. Students had higher pass rates in each weld quality criterion for the GMAW test than SMAW test. Few students (15%, f = 11) met the performance standards for passing the cracks criterion using SMAW. The majority of students were able to meet the undercut criterion standard using both GMAW and SMAW. Figure 6 shows an example of a SMAW weld test coupon.

Table 4

Weld Quality Criterion Pass Rate for SMAW Welding Test by Treatment Group (n = 71)

	Criterion							
	Cracks		Fusion		Leg Size		Undercut	
Treatment	f	%	f	%	f	%	f	%
1 (n = 19)	2	10.5	10	52.5	7	36.8	19	100.0
2 (n = 18)	3	16.7	9	50.0	11	61.1	15	83.3
3 (n = 16)	3	18.8	5	31.1	5	31.1	14	87.5
4 (n = 18)	3	16.7	8	44.4	6	33.3	18	100.0

Figure 6. SMAW weld test coupon.

Scores were calculated using a generalized linear mixed model. Inputs for the model were grade level, treatment group, GMAW exam score and SMAW exam score. Students' pretest scores and grade level were significantly correlated, $r(69) = .331$, $p = .005$. Therefore, students' grade level was assigned as a covariate. Estimated scores for GMAW and SMAW weld test exams shown in Table 6. Estimated scores are a prediction for each treatment group for each process. For example, individuals in treatment group one should produce welds that score three out of four when using the GMAW process. As indicated in Table 5, all four treatment groups should produce higher quality welds that meet AWS quality standards when using the GMAW process versus the SMAW process.

Table 5

Estimated GMAW and SMAW Scores by Treatment (n = 71)

Treatment	GMAW score $^{\pm}SE$	SMAW score $^{\pm}$ SE
1 (n = 19)	3.3 $^{\pm}$ 0.25	1.4 $^{\pm}$ 0.37
2 (n = 18)	3.0 $^{\pm}$ 0.39	1.6 $^{\pm}$ 0.47
3 (n = 16)	2.7 $^{\pm}$ 0.33	1.4 $^{\pm}$ 0.34
4 (n = 18)	3.1 $^{\pm}$ 0.27	1.4 $^{\pm}$ 0.37

The estimates for the binomial distribution are chances of successful weld criteria passes (the number of passing weld criteria for each weld test), estimated welding test scores were calculated by n*p, where n equals the maximum possible score of four and p is the chance estimates from the model. Table 6 provides the differences between estimated treatment effects. The estimates and standard errors are given on the log scale for the odd ratio of successfully scoring a four out of four on the weld test. Tukey-Kramer multiple comparison method was used to test pairwise treatment effects. Adjust *p*-values greater than 0.05 were considered significant. When comparing treatment groups one and three on the GMAW test, the success odds ratio for students following the practice sequence used in treatment group one is 2.5:1. This would indicate that students following the practice sequence used in treatment group one would be two and half time more likely to meet weld quality standards for an AWS 1F GMAW test than students following the practice sequence used in treatment group three. This difference was not statically significant (p = .115). Comparing treatment group three to treatment group four on GMAW test score, the estimate odds ratio indicates that treatment group three is .54:1. This would indicate that students following the practice sequence used in treatment group three would be less likely to meet weld quality standards for an AWS 1F GMAW test than students following the practice sequence used in treatment group four. This difference was not statistically significant (p = .241)

Pretest and post test score percentages by treatment group are given in Table 7. There was no significant difference between treatment groups on the written pretest, F = .847(3), p = .473, or posttest scores, F = .669(3), p = .574. Posttest scores indicate an

increase in students' content knowledge during the research project. The average pretest score for all classes was 56.01 (*SD* = 13.17) with a maximum possible score of 100. The average posttest score for all classes was 85.28 (*SD* = 6.16) with a maximum possible score of 100.

Table 6

Treatment Effects on GMAW and SMAW Scores (*n* = 71)

Exam	Treatment	Estimate	*SE*	*df*	*t*	*p*
GMAW	1 vs. 2	0.506	0.649	9	0.78	.455
GMAW	1 vs. 3	0.940	0.539	9	1.74	.115
GMAW	1 vs. 4	0.331	0.562	9	0.59	.569
GMAW	2 vs. 3	0.433	0.588	9	0.74	.480
GMAW	2 vs. 4	-0.174	0.610	9	-0.29	.780
GMAW	3 vs. 4	-0.608	0.484	9	-1.25	.241
SMAW	1 vs. 2	-0.139	0.582	9	-0.24	.816
SMAW	1 vs. 3	0.006	0.487	9	0.01	.989
SMAW	1 vs. 4	0.061	0.516	9	0.12	.907
SMAW	2 vs. 3	0.146	0.566	9	0.26	.802
SMAW	2 vs. 4	0.200	0.594	9	0.34	.743
SMAW	3 vs. 4	0.054	0.500	9	0.11	.915

Table 7

Average Pretest and Posttest Scores by Treatment Group (n = 71)

	Pretest		Posttest	
Treatment	*M*	*SD*	*M*	*SD*
1 (n = 19)	54.21	12.87	84.32	4.06
2 (n = 18)	59.61	11.06	86.23	6.32
3 (n = 16)	57.13	10.35	86.46	5.85
4 (n = 18)	53.33	17.19	84.10	7.82

CHAPTER V

SUMMARY, CONCLUSIONS, AND RECOMMENDATIONS

Summary of Study

The purpose of this study was to determine if having fewer operator-controlled factors during welding will improve secondary students' ability to meet weld quality standards for an AWS 1F test (flat position-fillet tee weld). Four classes with an average of 26 students with a total of 104 students enrolled in Agricultural Systems and Technology courses at a rural school in an intermountain west state participated in this quasi-experiment. A randomized block design was used. A total of 71 participants (70.3%) completed the research project. The experiment was performed over six class periods with a span of three calendar weeks. These scores are counts of passing the four individual weld criteria for each weld test and therefore binomially distributed (n = 4). In the study, independent variables of interest were lab practice orders (four orders) and the dependent variables were weld test (GMAW or SMAW). Student's grade level was assigned as the covariate. Each variable and interactions were tested. Classrooms and students within each classroom were random factors in the model.

Conclusions

Consistant with Ericson and Lehmann (1996) obtaining expertise in welding skills generally requires years of practice. To achieve excellence, individuals have to spend a considerable amount of time trying to improve performance through practice related activities (Williams & Hodges, 2005). Becoming proficient in a motor skill requires an

excess of 10,000 hours of practice to be accumulated (Simon and Chase, 1973). Wulf, et at. (1998) suggested having an external focus on learning should increase learning motor skills.

Results of this study showed that secondary students were more likely to perform welds that meet AWS quality standards using the GMAW process over the SMAW process. The GMAW process has fewer operator-controlled variables than the SMAW process. This suggests that the fewer operator variables a secondary student must control while learning to weld the more likely the welds will meet quality standards.

Objective 1: Determine the impact of sequencing welding skill laboratory practicums for GMAW and SMAW mastery of AWS standards for AWS 1F (flat-position fillet) welds

As students produced test results, a large number of welds failed to meet the minimum standard for grading purposes. This is indicated in the low percentage of pass rate for any given grading criteria as shown in Table 3 and Table 4. When comparing the overall weld quality pass rates of GMAW and SMAW students had higher passing percentages for GMAW than that of SMAW. Decreasing the time between practice and testing periods will increase AWS quality standard welds. Students that were tested the day following the practicing session had a higher percentage of welds that meet AWS quality standards. Welds that were produced with a greater length of time between practice and testing periods were less likely to meet AWS quality standards. Examining the estimate odds ratio test scores for treatment groups one and three for GMAW, group one was more likely to produce welds that meet AWS quality standards. The treatment

design for group one had students practice the GMAW process for one day, practice the SMAW process the next immediate class, and then test for the GMAW process the following class. Students were inactive between practicing and testing with the GMAW process for one class period. Treatment group three practiced GMAW, practiced SMAW, tested SMAW then tested GMAW. Students in this treatment group were inactive with the GMAW process for two class periods between practicing and testing. Table 6 indicates scores for GMAW are 2.55:1 over SMAW. These scores are much greater when time between practice sessions and testing periods, as between treatment groups one and three, are decreased. Students who were tested immediately following practice were more successful in meeting objective requirements.

Objective 2: Determine if limiting variables that students have to control while performing GMAW and SMAW process will improve their ability to produce higher quality AWS 1F (flat position-fillet) welds

Results indicate that students generally produced higher quality GMAW 1F welds than SMAW 1F welds. The mean test score among all treatment groups for GMAW was 2.96 (*SD* = 1.04), which is 1.42 points above the mean test score for all SMAW treatment groups of 1.54 (*SD* = 1.36). Hoffman et al.(2012) explained that the methods for starting and maintaining an arc differ greatly between the two welding processes. Starting and maintaining an arc in the GMAW process is not difficult. The trigger is pulled on the welding gun to initiate the arc. However, starting an arc with the SMAW process is operator dependent. This is accomplished by the operator either tapping or scratching the electrode on the base metal and lifting the electrode to a correct arc length. Once the arc

has started, the operator must maintain a proper arc length as the electrode is burnt off to become the solidified weld. Improper starting techniques result in an extinguished arc or an electrode stuck to the work piece. Eliminating this one variable indicates students being able to produce higher quality welds. The low SMAW test scores may be influenced by the complexity of switching between welding processes. Instructors may benefit from teaching, practicing and testing one welding process before introducing a new welding process. This is contingent on the welding facilities having sufficient welding equipment to instruct multiple students simultaneously.

This would suggest that the GMAW process may prove to be a legitimate beginning weld practicum over SMAW. This is evident in the overall GMAW test scores being higher than SMAW scores. The operator-controlled variables in the GMAW process allow students to have an increased focus of attention on the external environmental factors rather than placing attention on the placement of their hands and arms to manipulate the electrode when performing SMAW. The welding techniques used in the GMAW process such as arc length control, weld angle and travel angle positions may be easier to control which produce welds that meet AWS quality standards. With less operator-controlled variables present in the GMAW process, teachers may have legitimate reason to begin students using GMAW if the goal is to build students' confidence in welding by having them produce welds that meet AWS quality standards.

Major emphasis was given during the instructional period for students to focus on their weld technique through travel speed, and arc length, during the practicing and testing period. Having an external focus on weld technique is indicated in the overall ability of students to score higher in the test grading criteria of leg size for GMAW than

SMAW. As mentioned before, travel speed is welder-controlled and has a high degree of influence on weld bead shape, penetration, and fusion. Arc length is the distance from the end of the welding electrode to the weld puddle (Hoffman et al., 2012). A total of 45 students had a passing score for leg size using GMAW, which is determined by proper travel speed and arc length. Correct leg size indicates that students were focused on weld technique, specifically travel speed and arc length. Weld fusion is directly correlated with weld leg size. There were 48 students who passed the weld fusion criterion using GMAW.

Null Hypothesis

There will be no statistically significant difference between treatments of welding practice sequencing on students' SMAW AWS 1F weld scores.

There was no statistically significant difference in SMAW scores between treatment groups. Therefore, the null hypothesis was retained.

Recommendations for Practice

1. Extend practice sessions before collecting data on student proficiency when conducting research on sequencing laboratory practicums.

Study results indicated the need for sufficient practice time before being required to produce test results. The research design of this study limited the amount of time students were able to practice resulting in low overall test scores. In order for subjects to master any skilled technique, proper length of practice time is essential to produce

specific results. We recommend extending practice sessions essential for skills to be developed and improved upon. Educational programs should allow ample time for students to practice performing skills as required by program guidelines and regulations. Mastering any technique takes time and practice. Educators should be considerate of each student and assess their individual needs and requirements. Any career and technical educational program will benefit from the extra time spent in practice sessions by having improved end results. Instructional facilities should consider extending class time reserved for welding practicums. Lengthening individual class times to increase the amount of time students are producing welds may increase the percentage of welds that meet AWS quality standards. Welding educational facilities should consider recommending or requiring students to enroll in more advanced welding courses to allow more practice time to master welding techniques. As student's progress through beginning, intermediate and advanced welding courses, they are accumulating the essential practice hours required to master welding techniques. As test results suggest, majority of students were able to produce welds that met AWS quality standards with the GMAW process. This may suggest that less time is needed for practicing and testing students with the GMAW process allowing for more time to be spent on processes more difficult for students to learn and grasp, like SMAW.

2. Increase welds meeting AWS quality standards by students learning one welding process at a time.

Limited research has been conducted on the effects of teaching one welding process at a time to reduce the amount of variable overlap. An increase of welds meeting

AWS quality standards may be produced when students are required to only learn one welding process at a time. Instructors should consider teaching, practicing and testing students with one welding process, such as GMAW, before introducing them to a new process, like SMAW. This research design required individuals to learn both the GMAW and SMAW process simultaneously. Information specific to each welding process may have been mixed during the learning process. The highest difference of scores occurs between treatment group 1 and treatment group 3 for GMAW exam. Observation during the practice and testing periods suggest that test subjects were confused with the specific operator-controlled variables for each welding process.

3. Update and increase available welding equipment in agricultural systems technology programs.

School districts should consider updating old and outdated welding equipment to new and advanced equipment to meet the needs of an improving and changing welding industry. Many students who enroll in agricultural systems technology courses become completers of the program and pursue careers associated with welding. Such courses as agricultural systems technology, should furnish equipment suited for the demands and needs of the industry to provide students with the knowledge and preparation of operating equipment when receiving in industrial assignment.

School districts should also consider increasing the amount of welding equipment available to welding teachers and students. As indicated in the cognitive information processing theory (Andre & Phye, 1986), students have limited processing ability. A typical welding educational program is limited to the amount of welding equipment

available to students. With classroom size trends growing, the student-to-equipment ratio is increasing. This limitation requires the teacher to instruct and have students performing practice session on more than one welding process at a time. Welding educational facilities unequipped with sufficient welding equipment, or high student-to-equipment ratios, should increase the amount of welding equipment available to students to allow teachers to instruct one process at a time to decrease the amount of information students must process when learning a new welding process.

Teacher educator programs should consider instructing future teachers with correct methods of teaching welding and diagnosing welds. A major portion of this study was giving instructor feedback to students as practice and test welds were completed. Welding instructors must be knowledgeable in weld diagnosis in order to help students improve their welding techniques and abilities. Learning how to diagnose welds before being required to teach welding may help improve end results.

Recommendations for Future Research

This project has provided baseline data in understanding sequencing welding laboratory practicums by limiting operator-controlled variables. Future research should be conducted to assess the benefits of sequencing laboratory practicums while limiting variables for entry-level welding courses. In continuing this project, future research should be conducted to assess the length of practice time essential produce welds that meet AWS quality standards. This study utilized one day (60 minutes) of practice time for each welding process before assessing the ability to produce welds meeting AWS quality standards. Future studies should consider lengthening the practice session times to

two days (120 minutes) or more to determine if a longer practice session will result in a higher percentage of welds that meet AWS standards. Instructors should consider giving timely feedback during practice sessions to help improve welding technique and outcomes. Future studies should analyze the benefit of solely teaching, practicing, and testing one welding process before introducing students to a new welding process. This studies sample population began at N=101 and had a completion rate of 70.3% or (*N* = 71). Continuing this research study by adding more participants will increase the validity of the study. Scores from this study were widely scattered indicating a need to increase the sample population to determine any significance on sequencing the order of practicum operations.

REFERENCES

Andre, T., & Phye, G. D. (1986). Cognition, learning, and education. In G. D. Phye & T. Andre (Eds.), *Cognitive classroom learning: Understanding, thinking, and problem solving* (pp. 1-19). Orlando, FL: Academic Press.

American Welding Society (AWS). (2005). *Curriculum guide for the training of welding personnel: Level I - entry-level* (Draft). Unpublished manuscript. Retrieved from http://pubs.aws.org/download/previews/EG2.0-2005PV.pdf

American Welding Society (AWS). (2006), *Guide for the training of welding personnel: Level I— entry welder.* Retrieved from http://pubs.aws.org/download/previews/EG2.0-2006PV.pdf

Ericsson, K. A., Krampe, R. T., & Tesch-Römer, C. (1993). The role of deliberate practice in the acquisition of expert performance. *Psychological Review, 100*, 363-406. doi: 10.1037/0033-295X.100.3.363

Ericsson, K. A., & Lehmann, A. C. (1996). Expert and exceptional performance: Evidence of maximal adaptation to task constraints. *Annual Review of Psychology, 47*, 273-305. doi: 10.1146/annurev.psych.47.1.273

Gagné, R. M. (1984). Learning outcomes and their effects: Useful categories of human performance. *American Psychologist, 39*, 377-385. doi: 10.1037/0003-066X.39.4.377

Guadagnoli, M. A., & Lee, T. D. (2004). Challenge point: A framework for conceptualizing the effects of various practice conditions in motor learning. *Journal of Motor Behavior, 36*(2), 212–224. doi:10.3200/JMBR.36.2.212-224

Handford, C., Davids, K., Bennett, S., & Button, C. (1997). Skill acquisition in sport: Some applications of an evolving practice ecology. *Journal of Sports Sciences, 15*, 621-640.

Hoffman, D. J., Dahle, K. R., & Fisher, D. J. (2012). *Welding*. New Jersey, NJ: Pearson Education.

Moore, A. J. (2010, July). Essential vs. nonessential variables. *Inspection Trends.* Retrieved from http://www.aws.org/itrends/2010/07/it201007/it0710-20.pdf

Nelson, T. O., & Narens, L. (1990). Metamemory: A theoretical framework and new findings. In G. H. Bower (Ed.), *The psychology of learning and motivation, Vol. 26.* (pp. 125-173). New York, NY: Academic Press.

Pate, M. L., Warnick, B. K., & Meyers, T. (2012). Determining the critical skills beginning agriculture teachers need to successfully teach welding. *Career and Technical Education Research Journal, 37*(2), 179-180. doi: 10.5328/cter37.2.171

Phye, G. D. (2005). Academic learning and academic achievement: Correspondence issues. In G. D. Phye, D. H. Robinson, & J. R. Levin (Eds.), *Empirical methods for evaluating educational interventions* (pp. 193-211). San Diego, CA: Elsevier Academic Press.

Schunk, D. H. (2008). *Learning theories: An educational perspective* (5th ed.). Columbus, OH: Prentice Hall.

Sgro, S. D., Field, D. W., & Freeman, S. A. (2008). The impact of teaching oxyfuel welding on gas metal arc welding skills. *Journal of Technology Studies, 34*(1), 2-11. Retrieved from http://scholar.lib.vt.edu/

Shuell, T. J. (1986). Cognitive conceptions of learning. *Review of Educational Research, 56*, 411-436. Retrieved from http://www.jstor.org/action/showPublication?journalCode=revieducrese

Simon, H. A., & Chase, W. G. (1973). Skill in chess: Experiments with chess-playing tasks and computer simulation of skilled performance throw light on some human perceptual and memory processes. *American Scientist, 61*, 394-403. Retrieved from http://www.jstor.org/stable/27843878

Utah State Office of Education (USOE). (2011). *Agricultural systems technology I.* Retrieved from http://www.schools.utah.gov/cte/documents/agriculture/standards/AgSystemsTech1.pdf

Williams, A. M., & Hodges, N. J. (2005), Practice, instruction and skill acquisition in soccer: Challenging tradition. *Journal of Sports Sciences, 23*(6), 637-650. doi: 10.1080/02640410400021328

Wulf, G., HÖß, M., & Prinz, W. (1998), Instructions for motor learning: Differential effects of internal versus external focus of attention. *Journal of Motor Behavior, 30*(2), 169-179. doi: 10.1080/00222899809601334

Zalkind, A. (2007, February). *Welding shortage fact sheet*. Retrieved from http://www.aws.org/pr/shortagefactsheet.pdf

APPENDICES

APPENDIX A

Performance Qualification Checklist

Performance Qualification Checklist

Specification for Qualification and Certification of

Level I—Entry Welder

VISUAL INSPECTION RESULTS

Trainee ID #_____

Sample # _____

Cracks or Porosity:

Acceptable ☐ Rejected ☐

Complete Fusion:

Acceptable ☐ Rejected ☐

Fillet Leg Size:

Acceptable ☐ Rejected ☐

Undercut:

Acceptable ☐ Rejected ☐

Instructors Signature_____ Date _____

APPENDIX B

Pretest Questions

What is the minimum requirement for the number of shade lens when welding with either GMAW or SMAW?

A. 4
B. 6
C. 8
D. 10

What is the required contact to work distance (CTWD) when welding with GMAW?

A. 3/8” – ½”
B. ¼” – 3/8”
C. ½” – 5/8”
D. 1/8” – ¼”

This term refers to a part of the weld being equal to the thickness of the metal being welded?

A. Weld Leg
B. Weld Face
C. Weld Throat
D. Weld Root

Select the proper terms for each part of the SMAW weld.

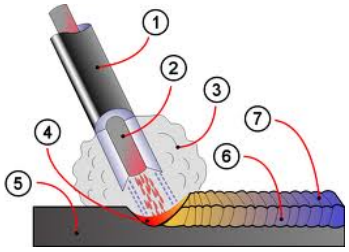

1. Flux Coating
2. Metal Core Rod
3. Shielding Gas
4. Weld Puddle
5. Base Metal
6. Weld
7. Slag

Arc length refers to the distance between the electrode and the work piece. How long should the arc length be in SMAW or GMAW?

A. 1/8” – ¼”
B. ¼” – 3/8”
C. 3/8” – ½”
D. ½” – 5/8”

Which term refers to the speed at which the electrode moves along the base metal?

A. Travel Speed
B. Travel Angle
C. Work Angle
D. Arc Length

What are the two starting methods used in SMAW?

- Scratch Start
- Tap Start
- Punch Start
- Hot Start

What are the melting, and flowing together of metal?

A. Welding
B. Fusing
C. Bonding
D. Joining

How should gas cylinders be stored?

A. Chained, upright with cap
B. Chained, upright without cap
C. Stacked on the floor
D. Next to flammable materials

Select the proper term for each part of the GMAW weld.

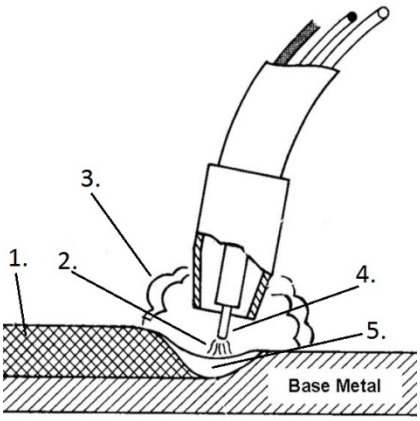

1. Weld
2. Arc
3. Shielding Gas
4. Electrode
5. Weld Puddle

Select which personal protective equipment is required while welding.

- ☐ Welding gloves
- ☐ Safety Glasses
- ☐ Welding Helmet
- ☐ Coveralls/Shop coat
- ☐ Closed Toed Shoes
- ☐ Long Pants
- ☐ Hard Hat
- ☐ Ear Plugs

While welding with GMAW and 100% CO2, what should the cubic feet per hour (CFH) be set on the gas regulator?

A. 10-15
B. 15-20
C. 20-25
D. 25-30

Label what each distance represents with the GMAW process in the picture below.

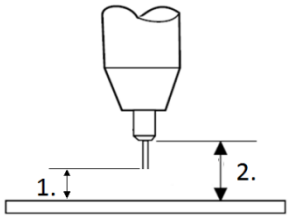

1. Arc Length
2. Contact to Work Distance (CTWD)

Which welding variable refers to the angle between the electrode and the plane perpendicular to the work piece as in the picture below?

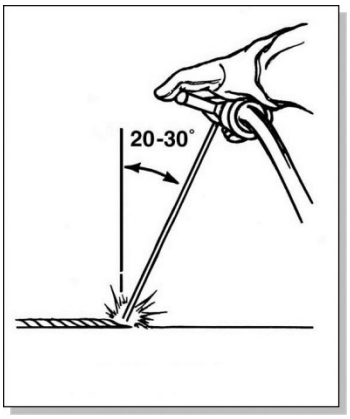

- Travel Angle

Which welding variable refers to the angle between the electrode and the work piece as in the picture below?

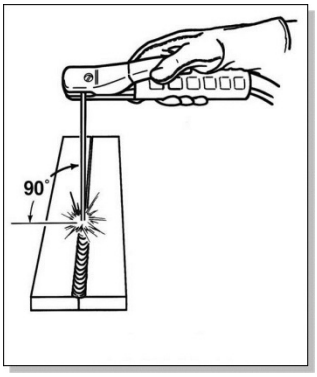

- Work Angle

What is the proper travel angle when welding with SMAW?

A. 0 – 5 degrees
B. 5 – 10 degrees
C. 10 – 15 degrees
D. 15 – 20 degrees

What is the recommended wire stick out when welding with GMAW?

A. 1/8” – ¼”
B. ¼” – 3/8”
C. 3/8” – ½”
D. ½” – 5/8”

Which of the following variable are controlled by the welding operator during the welding process?

- ☐ Polarity (DC-, DC+ , AC)
- ☐ Travel Speed
- ☐ Arc Length
- ☐ Travel Angle
- ☐ Work Angle
- ☐ Amperage Output

In the GMAW process, what is used to protect the weld puddle during the welding process?

A. Shielding Gas
B. Flux
C. Slag
D. Atmosphere Air

What is an advantage of GMAW over SMAW?

A. Faster due to continuous wire feed
B. Highly portable.
C. Easy to change between different metals.
D. Capable of welding in outdoor settings.

APPENIX C

Posttest Questions

What is the minimum requirement for the number of shade lens when welding with either GMAW or SMAW?

E. 4
F. 6
G. 8
H. 10

What is the required contact to work distance (CTWD) when welding with GMAW?

E. 3/8” – ½”
F. ¼” – 3/8”
G. ½” – 5/8”
H. 1/8” – ¼”

This term refers to a part of the weld being equal to the thickness of the metal being welded?

E. Weld Leg
F. Weld Face
G. Weld Throat
H. Weld Root

Select the proper terms for each part of the SMAW weld.

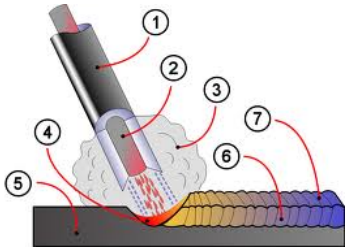

8. Flux Coating
9. Metal Core Rod
10. Shielding Gas
11. Weld Puddle
12. Base Metal
13. Weld
14. Slag

Arc length refers to the distance between the electrode and the work piece. How long should the arc length be in SMAW or GMAW?

E. 1/8” – ¼”
F. ¼” – 3/8”
G. 3/8” – ½”
H. ½” – 5/8”

Which term refers to the speed at which the electrode moves along the base metal?

E. Travel Speed
F. Travel Angle
G. Work Angle
H. Arc Length

What are the two starting methods used in SMAW?

- Scratch Start
- Tap Start
- Punch Start
- Hot Start

What are the melting, and flowing together of metal?

E. Welding
F. Fusing
G. Bonding
H. Joining

How should gas cylinders be stored?

E. Chained, upright with cap
F. Chained, upright without cap
G. Stacked on the floor
H. Next to flammable materials

Select the proper term for each part of the GMAW weld.

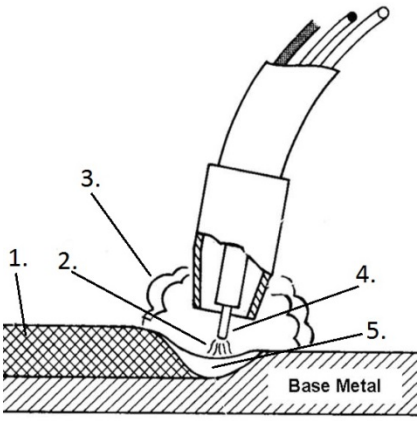

6. Weld
7. Arc
8. Shielding Gas
9. Electrode
10. Weld Puddle

Select which personal protective equipment is required while welding.

- ☐ Welding gloves
- ☐ Safety Glasses
- ☐ Welding Helmet
- ☐ Coveralls/Shop coat
- ☐ Closed Toed Shoes
- ☐ Long Pants
- ☐ Hard Hat
- ☐ Ear Plugs

While welding with GMAW and 100% CO2, what should the cubic feet per hour (CFH) be set on the gas regulator?

E. 10-15
F. 15-20
G. 20-25
H. 25-30

Label what each distance represents with the GMAW process in the picture below.

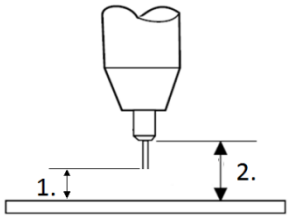

3. Arc Length
4. Contact to Work Distance (CTWD)

Which welding variable refers to the angle between the electrode and the plane perpendicular to the work piece as in the picture below?

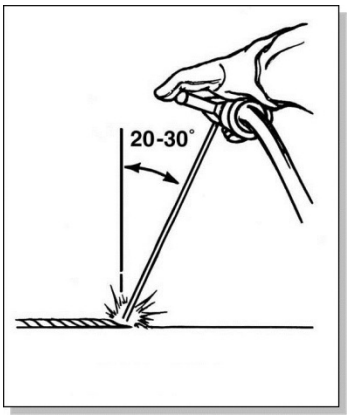

- Travel Angle

Which welding variable refers to the angle between the electrode and the work piece as in the picture below?

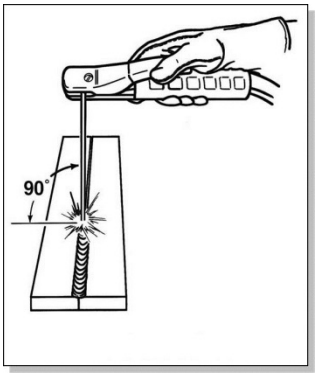

- Work Angle

What is the proper travel angle when welding with SMAW?

E. 0 – 5 degrees
F. 5 – 10 degrees
G. 10 – 15 degrees
H. 15 – 20 degrees

What is the recommended wire stick out when welding with GMAW?

E. 1/8” – ¼”
F. ¼” – 3/8”
G. 3/8” – ½”
H. ½” – 5/8”

Which of the following variable are controlled by the welding operator during the welding process?

- ☐ Polarity (DC-, DC+ , AC)
- ☐ Travel Speed
- ☐ Arc Length
- ☐ Travel Angle
- ☐ Work Angle
- ☐ Amperage Output

In the GMAW process, what is used to protect the weld puddle during the welding process?

E. Shielding Gas
F. Flux
G. Slag
H. Atmosphere Air

What is an advantage of GMAW over SMAW?

E. Faster due to continuous wire feed
F. Highly portable.
G. Easy to change between different metals.
H. Capable of welding in outdoor settings.

Which weld joint is pictured below?

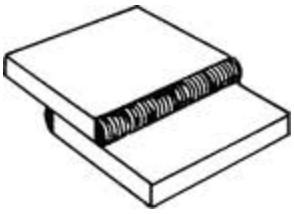

A. Lap Weld
B. Tee Weld
C. Butt Weld
D. Edge Weld

Which weld joint is pictured below?

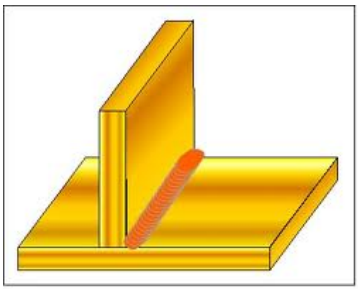

A. Lap Weld
B. Tee Weld
C. Butt Weld
D. Edge Weld

Which weld joint it pictured below?

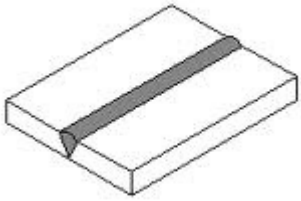

A. Lap Weld
B. Tee Welt
C. Butt Weld
D. Edge Weld

Select the proper name of the structural steel below.

A. Channel Iron
B. Square Tubing
C. Rectangular Tubing
D. Expanded Metal

Select the proper name of the structural steel below.

A. Channel Iron
B. Square Tubing
C. Rectangular Tubing
D. Expanded Metal

Select the proper name of the structural steel below.

A. Channel Iron
B. Square Tubing
C. Rectangular Tubing
D. Expanded Metal

Select the proper name of the structural steel below.

A. Channel Iron
B. Angle Iron
C. Round Tube
D. Square Stock

Select the proper name of the structural steel below.

A. Round Tube
B. Solid Round Stock
C. Angle Iron
D. Pipe