# Modular Reconfigurable Spacecraft

# Small Rocket/Spacecraft Technology Platform

# SMART

***Micro-Spacecraft Prototype Demonstrates Modular Open Systems Architecture for Fast Life-Cycle Missions***

***Jaime Esper* *, Thomas P. Flatley, Barton Bull**
***NASA Goddard Space Flight Center***
***Greenbelt, Maryland***

* ***Presenting***

10 August 2011

# SMART Objectives

- Demonstrate a point design instantiation of a Modular, Open Systems Architecture micro-spacecraft prototype.
- Build and flight-validate a miniaturized high-performance, power-efficient processing avionics for small expendable launch vehicles, and small orbiting spacecraft (Space Cube V1.5).
- Demonstrate a modular, reconfigurable structure.
- Incorporate the Wallops Flight Facility's (WFF) Low Cost TDRSS Transmitter as a component of Space-Based Range.
- Provide a basis for the possible adaptation of WFF's Autonomous Flight Safety System (AFSS).
- Demonstrate tunable thermal technology to accommodate varying orbital environments.

# Micro-spacecraft prototype

- **Micro-Spacecraft Prototype Demonstrates Modular Open Systems Architecture for Fast Life-Cycle Missions. Designed as free-flyer.**
- **For NASA, rapid mission implementations represent an opportunity to find creative ways for reducing mission life-cycle times with the resulting savings in cost.**

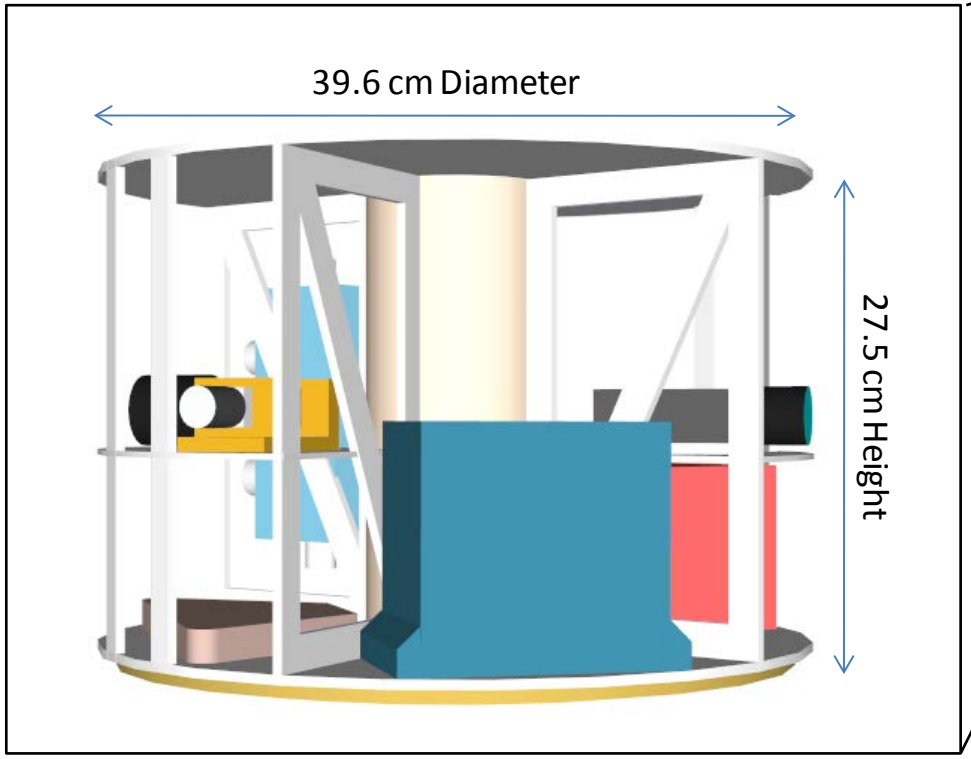


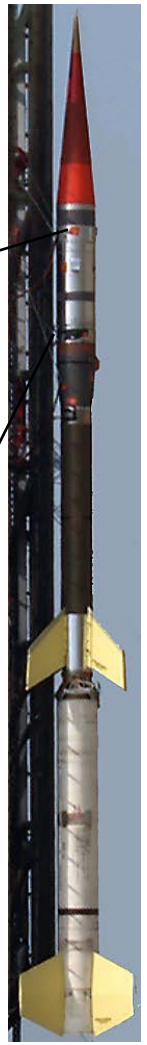


**WFF SubTec-5**

# As Flown Layout

- **SMART provides flexibility in layout, and two were flight qualified. Layout details for the version flown is given here.**

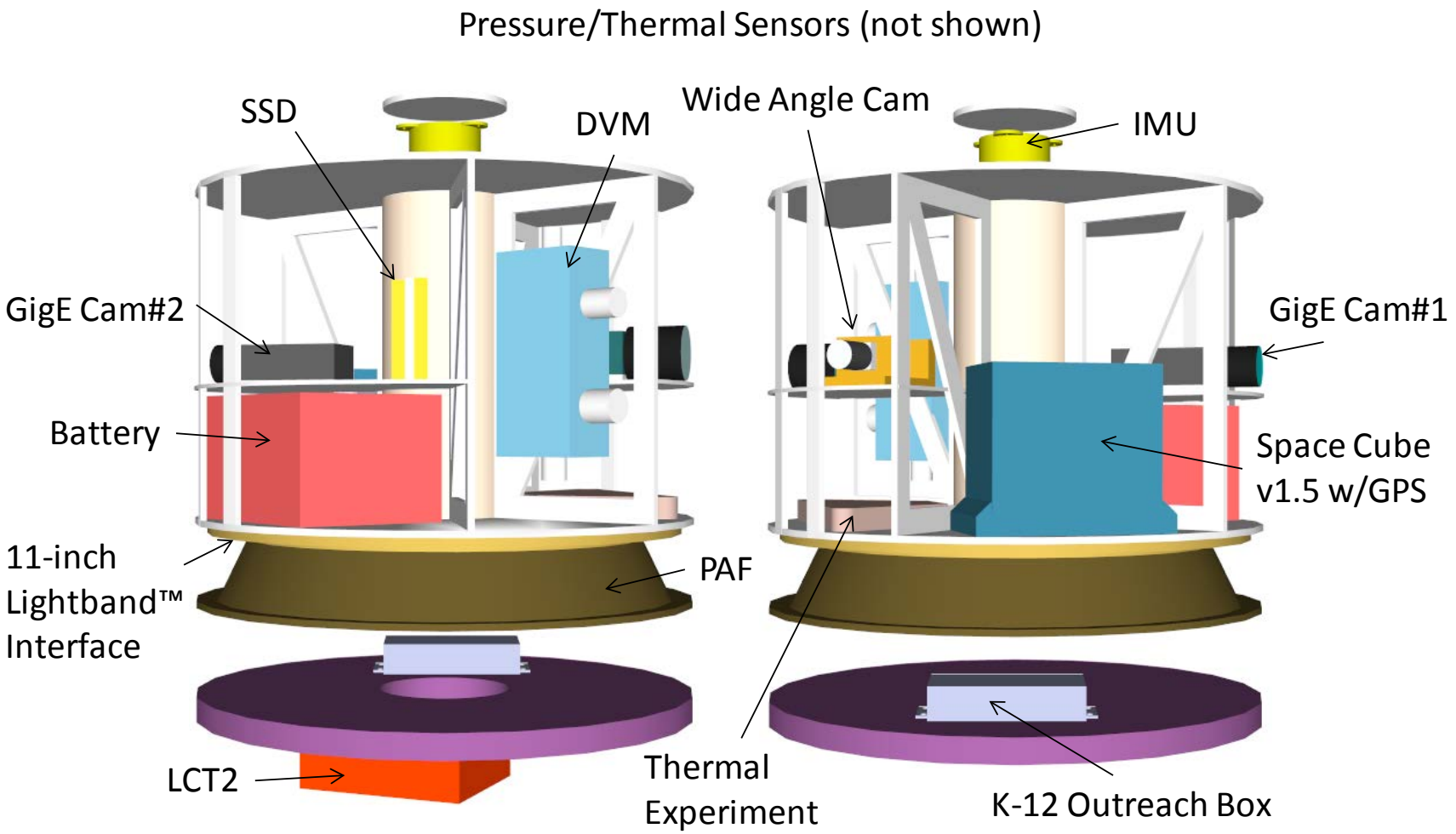

# Space Cube v1.5

- **Provides inherent redundancy through multiple processor cores, high computational capability, and low power consumption.**

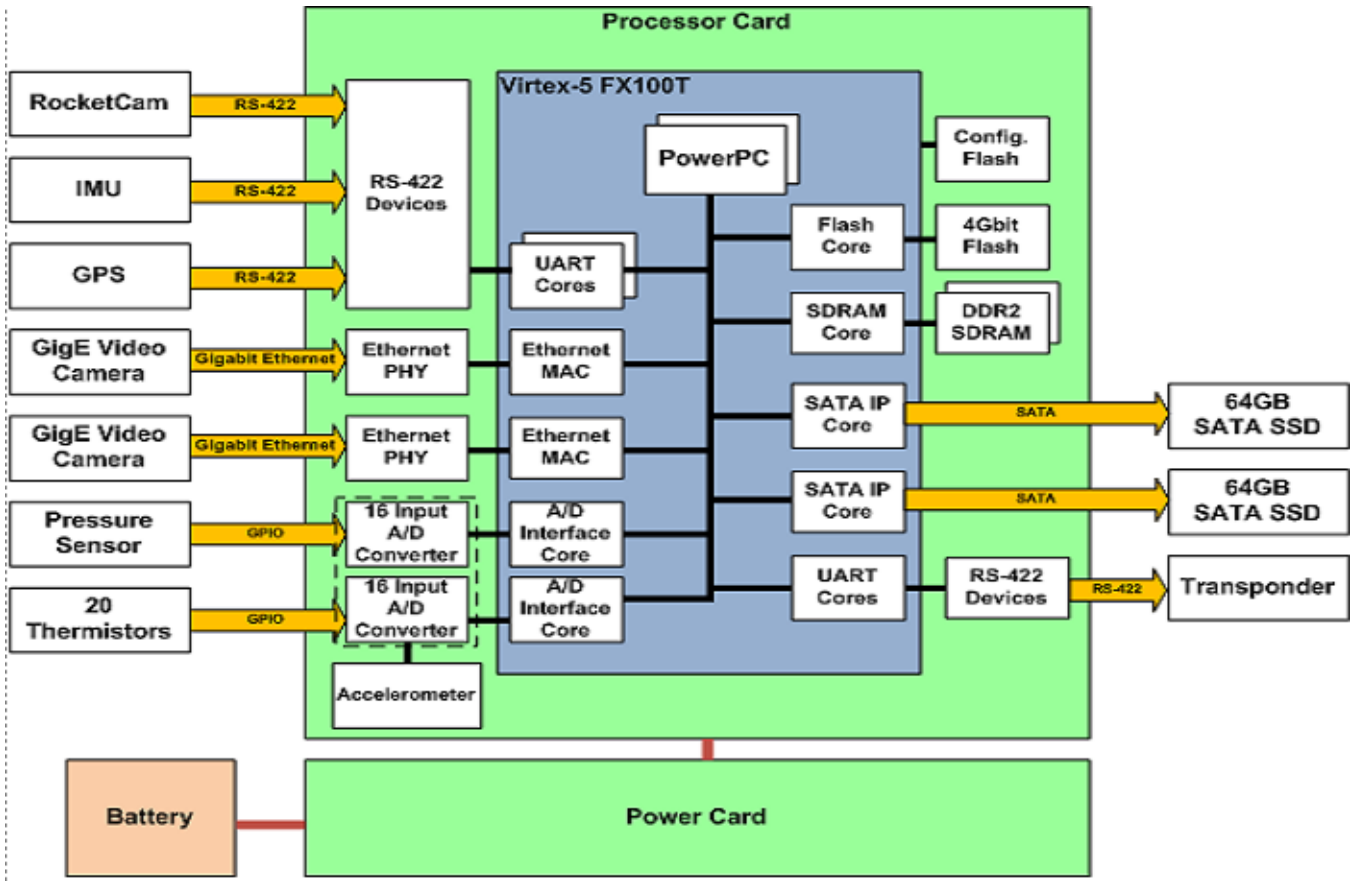


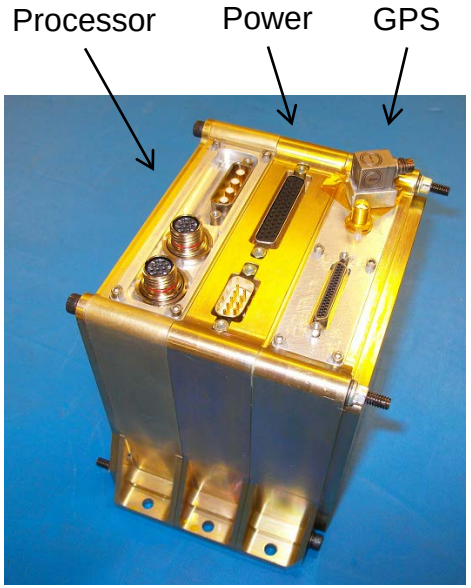


**Box Volume**

12.4 cm (l) x 10.7 cm (h) x 8.9 cm (d)

(4.9 in x 4.2 in x 3.5 in)

**Box footprint**

14.6 cm x 8.9 cm

(5.7 in x 3.5 in)

# Modular, Reconfigurable Structure

- **The objective is to allow for layout changes using some basic components.**

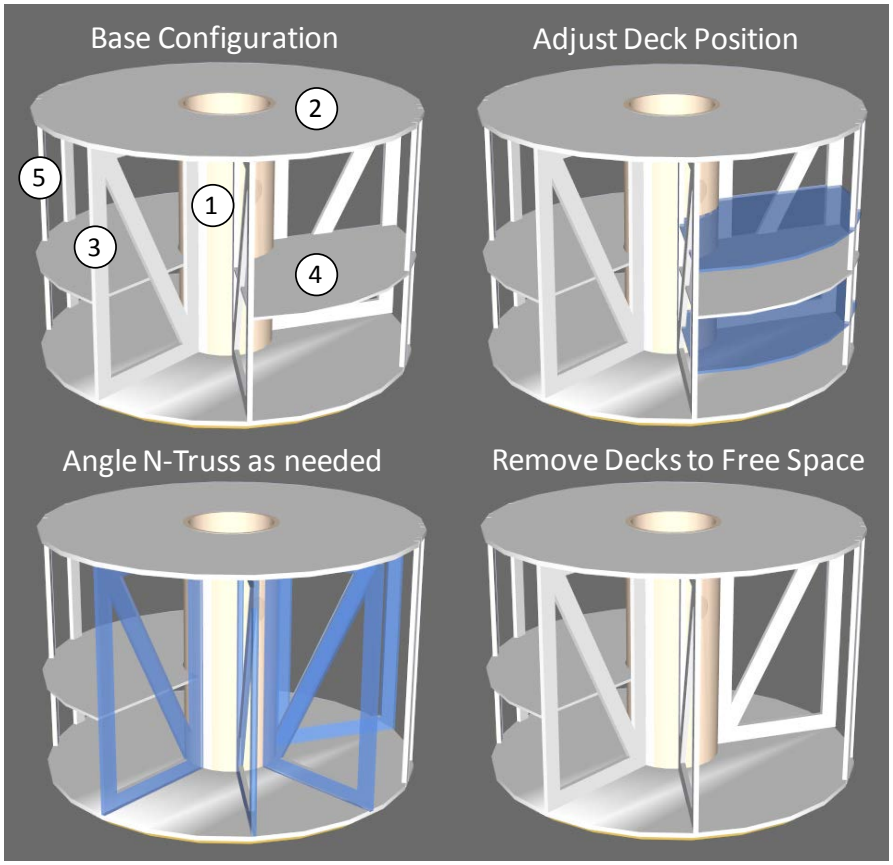


Structural Components:
(1) Thrust Tube; (2) Closeout Deck; (3) N-Truss; (4) Mid-Deck; (5) Longeron

Flight qualification successfully completed in July 2010, with two configurations tested.

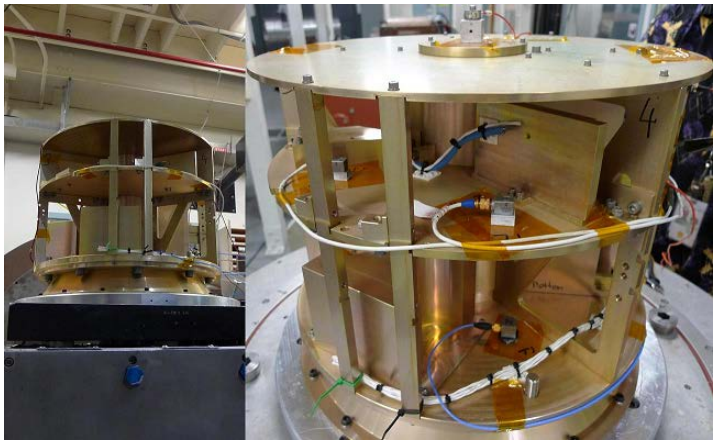

# Autonomous Flight Safety System (AFSS)

- **The AFSS uses GPS, IMUs, and flight processors to monitor the progress of the launch vehicle with respect to multiple flight termination criteria and, if necessary, terminate the flight without relying on ground-based assets.**
- **SMART SCv1.5 represents a candidate host for this software, in a small package. Its performance will be tested in an upcoming launch in December 2011, on board an UpAero Space Loft sounding rocket.**

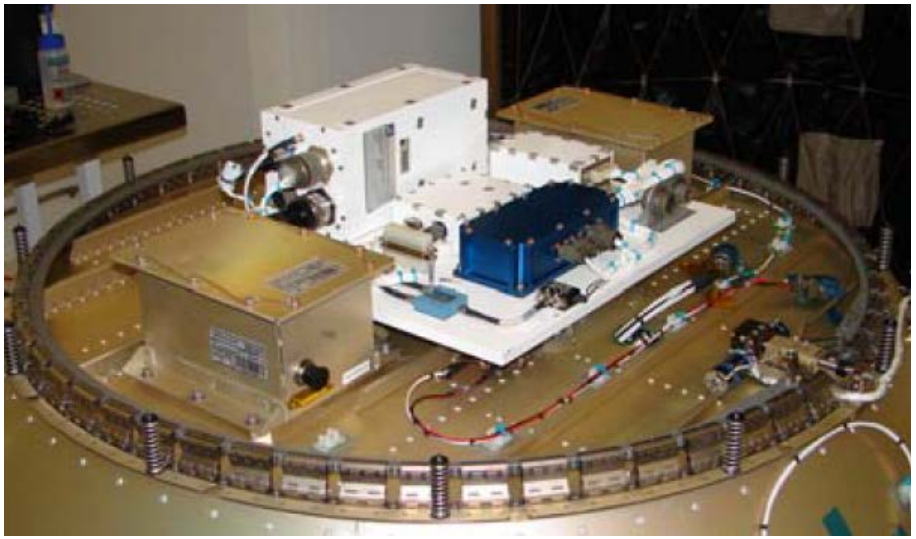

Early AFSS Test Hardware on SpaceX Falcon 1

# Low-Cost TDRSS/Telemetry Transmitter/Transceiver

- **The LCT2 was developed at Wallops Flight Facility to provide a low cost space based range solution for telemetering data. The LCT2 follows the roadmap towards a space-based range with the goal of reducing the operational cost of the range while increasing the response time to the launch industry.**
- **LCT2 is a fully programmable software based transceiver and has been used in a range of TDRSS and non-TDRSS applications to achieve not only satellite communications but direct to ground applications (as in SMART).**

LCT2 is a key subsystem of Space-Based Range

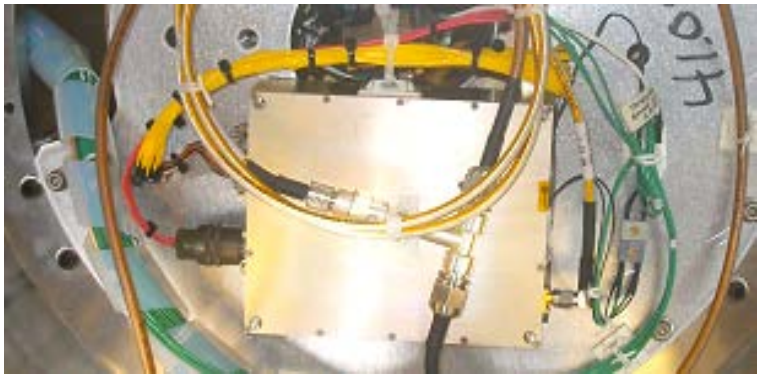

LCT2 on SMART's Rear Bulkhead

# SMART Free-Flyer

- **The next step in the validation of SMART and its architecture is to use it as a fast on-orbit demonstrator. Several options are currently under study, including an ORS risk-reduction exercise, and NASA small satellite applications.**

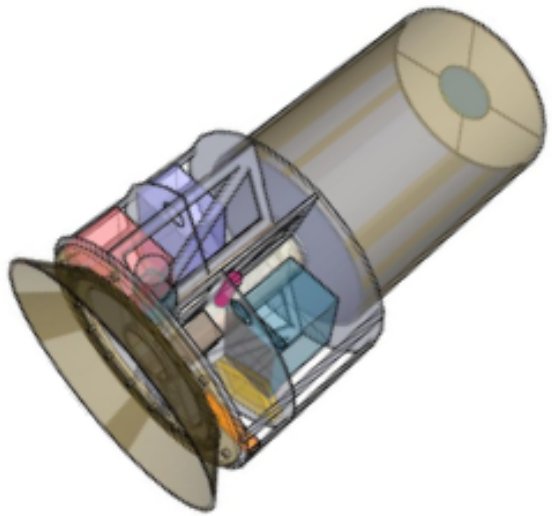

SMART Optical Application (30 cm aperture, f/1.4 Cassegrain-style telescope)

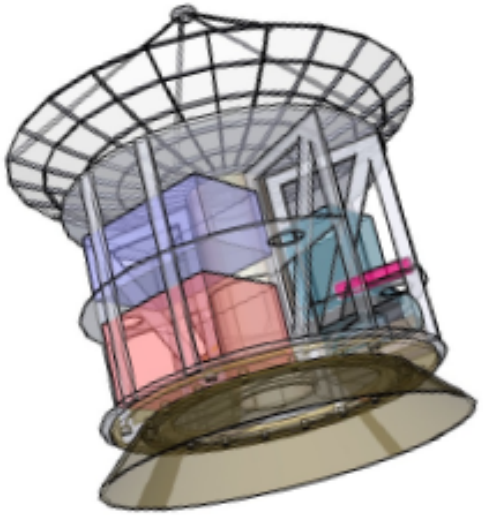

SMART Radio-Frequency Application (50 cm aperture antenna)

- BOL Total Power ~ 51W to 75W
- Available Payload Power ~ 12W to 32W
- Bus Mass ~ 35 kg
- 3-Axis Stabilized
- LEO: Equatorial to Polar Orbits

# Conclusions and Videos
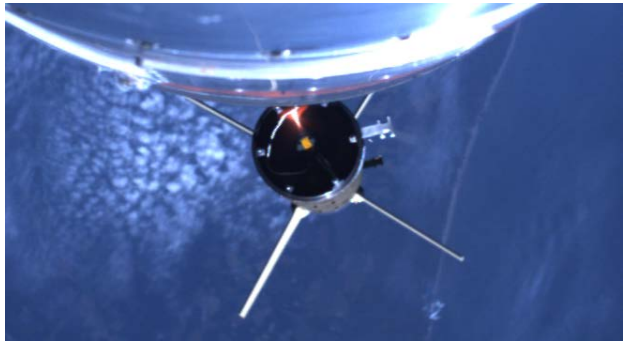
- **From a NASA perspective, SMART provides a step forward in affordable micro-satellites, yielding flexible capability without compromised performance.**
- **For ORS, SMART also represents hardware validation of critical enabling technologies, not only for hosting AFSS and as a dual-application avionics, but also as a validation tool for Modular, Reconfigurable, and Rapid architectural concepts.**