FULLY-INTEGRATED ELECTRONIC SYSTEM FOR A PLASMA IMPEDANCE PROBE

Magathi Jayaram, Mohamad El Hamoui, Swadesh Patra,

Chris Winstead and Edmund Spencer

Dept. of Electrical and Computer Engineering,

Utah State University

SSC08-VI2

Outline

- Motivation
- Previous Work
- Proposed PIP Electronic Design
  - System Architecture
  - Advantages of the Proposed Design
  - Design Methodology
- Results
- Conclusion

MOTIVATION

- The Plasma Impedance Probe (PIP) is an instrument that measures the impedance of a probe immersed in plasma environment.
- The PIP is an attractive diagnostic tool for ionospheric research.
- It is a means of obtaining information about the plasma characteristics like electron-neutron collision frequency, and the plasma's electron density where conventional Langmuir probes are inadequate [1].
- Variety of techniques are available to measure absolute electron densities [2].
- The PIP is an instrument based on the self-impedance technique where no cross calibration is required to obtain the absolute electron densities [3].

Outline

- Motivation
- Previous Work
- Proposed PIP Electronic Design
  - System Architecture
  - Advantages of the Proposed Design
  - Design Methodology
- Results
- Conclusion

PREVIOUS WORK

- PIP instruments have been studied for the last 50 years and a variety of approaches have been reported.
- Steigies et al. [4] reported a design in 2000
  - that measured the magnitude of the plasma impedance while sweeping over a wide range of frequencies.
  - It used a digitally controlled impedance probe to give fast, accurate results.
  - The upper limit of the accessible electron density was limited by the Direct Digital Synthesizer (DDS) clock frequency of 25MHz.

PREVIOUS WORK

- Blackwell et al. [5] reported a design in 2005
  - that used the network analyzer technique to generate impedance curves in a controlled plasma environment.
  - The main sources of error in the impedance measurement was the incorrect calibration of the network analyzer, noise introduced by reflected radiation from objects near the probe and generation of standing waves at high frequencies.

PREVIOUS WORK

- In 2006, Hummel [6] reported a PIP instrument
  - that used the quadrature technique to measure both the magnitude and phase of the probes impedance
- In 2007, Sanderson [7] performed a detailed analysis
  - of the quadrature PIP design and its performance in sounding rocket flights.
  - The instruments reliability was limited by various transient errors and imperfections in the probes stimulus produced by the DDS.

Outline

- Motivation
- Previous Work
- Proposed PIP Electronic Design
  - System Architecture
  - Advantages of the Proposed Design
  - Design Methodology
- Results
- Conclusion

PROPOSED PIP ELECTRONIC DESIGN

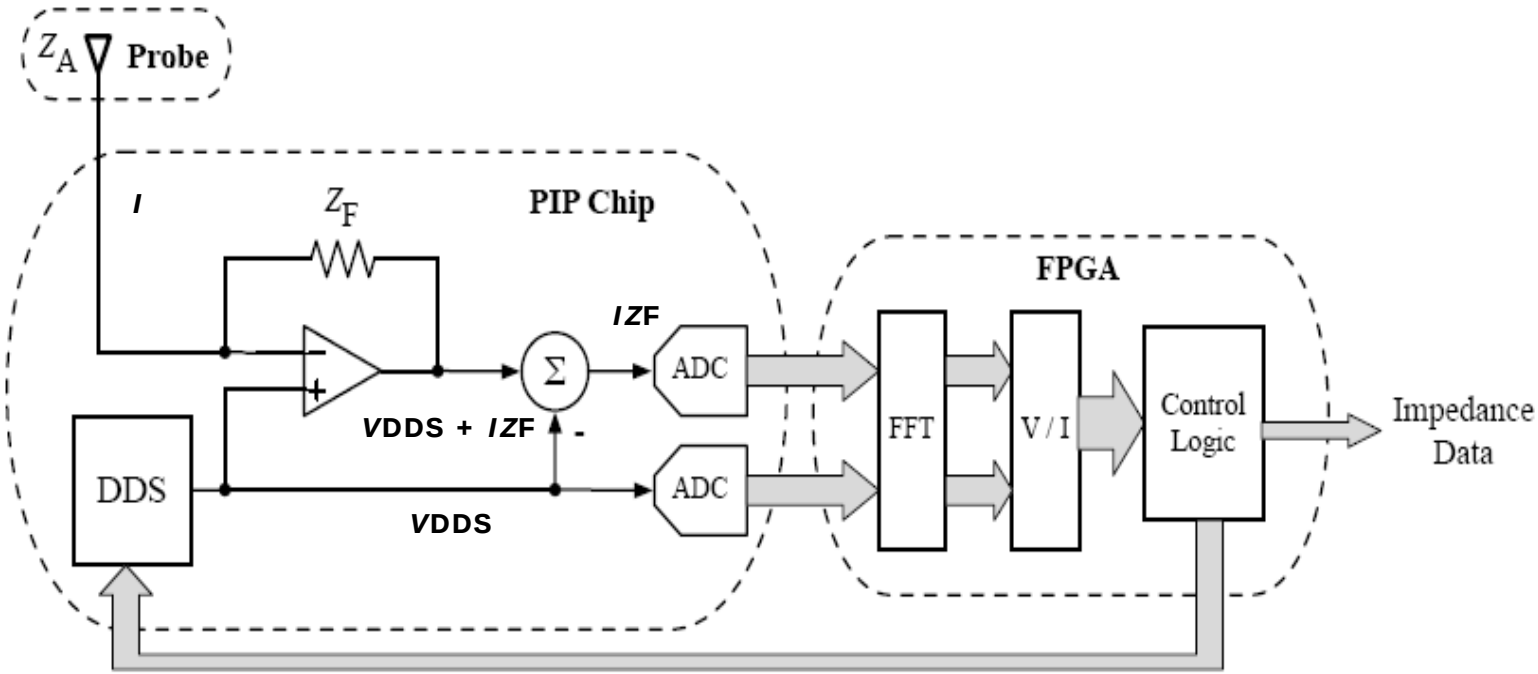

ADVANTAGES

- **FFT operation :**
  - Spectral effects of common analog errors like clock jitter or transient spikes or glitches tend to appear away from the fundamental component. So they can be effectively filtered out by the FFT operation.
  - Increases the noise immunity of the system
- **DDS :**
  - The new electronic PIP design samples the probe's voltage and current directly. This approach eliminates the need for a pure sinusoidal stimulus and greatly relaxes the error tolerance for the DDS.
  - Since a precise sinusoid is not required, it is possible to use a simplified, low-power DDS design.

ADVANTAGES

- **ADCs:**
  - The use of matched ADCs to sample the probes current and voltage signals, decreases the instruments sensitivity to variations in the probes stimulus waveform.
  - The use of symmetric differential sampling eliminates non-linear distortions.

- **Eliminates analog signal processing wherever possible**
  - This reduces the sources of error and instability from the system.
  - The proposed system would require only two precision components: the transimpedance amplifier and the ADC.

- **Integrating the analog components on a single chip miniaturizes the system and allows the customization of key components, thereby increasing the overall system efficiency.**

DESIGN METHODOLOGY

- Our approach strongly focuses on analog errors and variations.
  - Revisions are expensive in fully-integrated designs. Hence our approach would thoroughly characterize and verify the design before fabricating any prototype.
  - Allows us to quantify the accuracy and precision of the PIP under the influence of all errors and variations.
- The entire design hierarchy is tested as a cohesive instrument using the top-down design strategy.
- Fully quantify the precision of the PIP's impedance measurement across its entire spectral range.

DESIGN METHODOLOGY

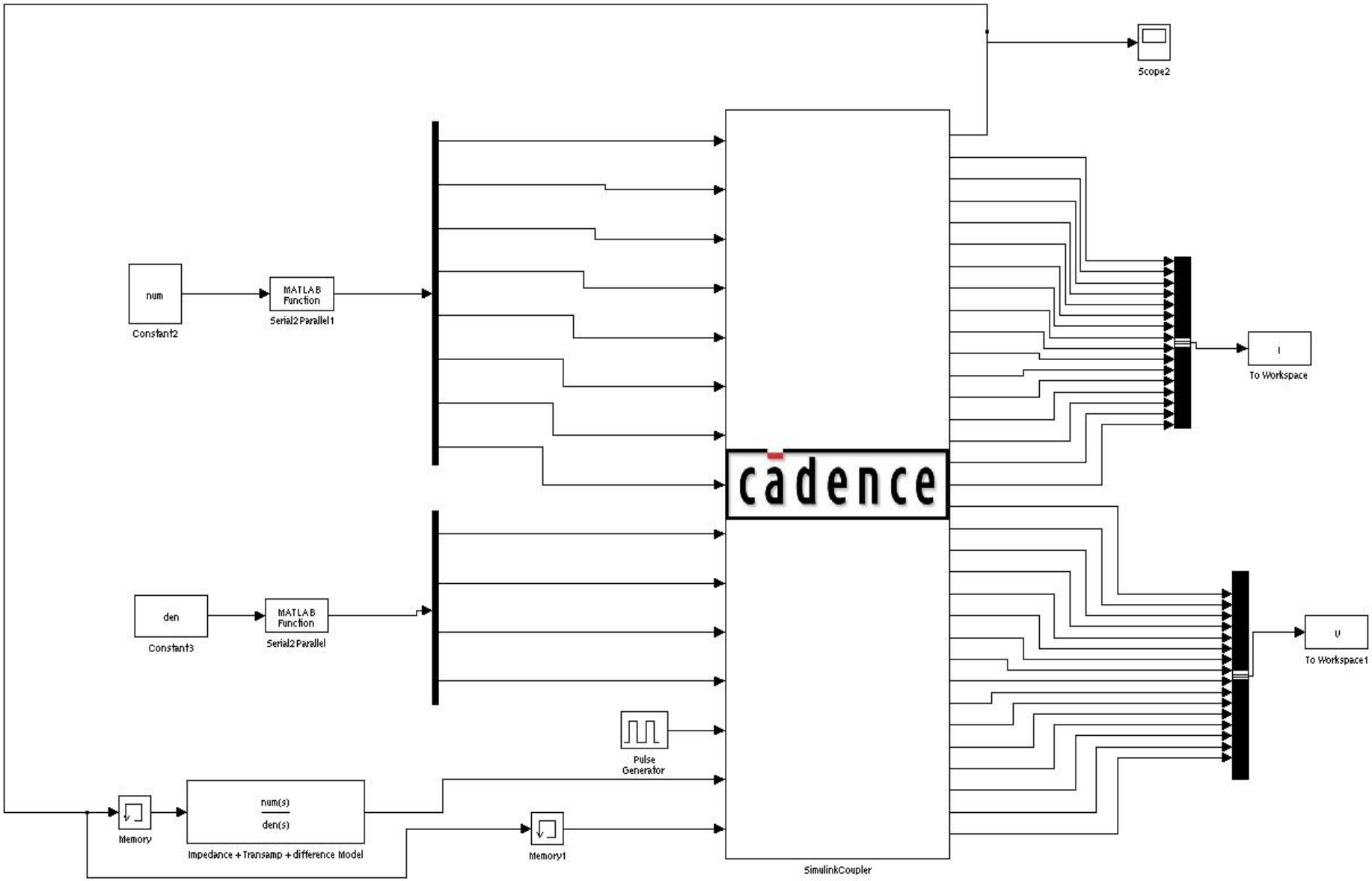

Outline

- Motivation
- Previous Work
- Proposed PIP Electronic Design
  - System Architecture
  - Advantages of the Proposed Design
  - Design Methodology
- Results
- Conclusion

RESULTS

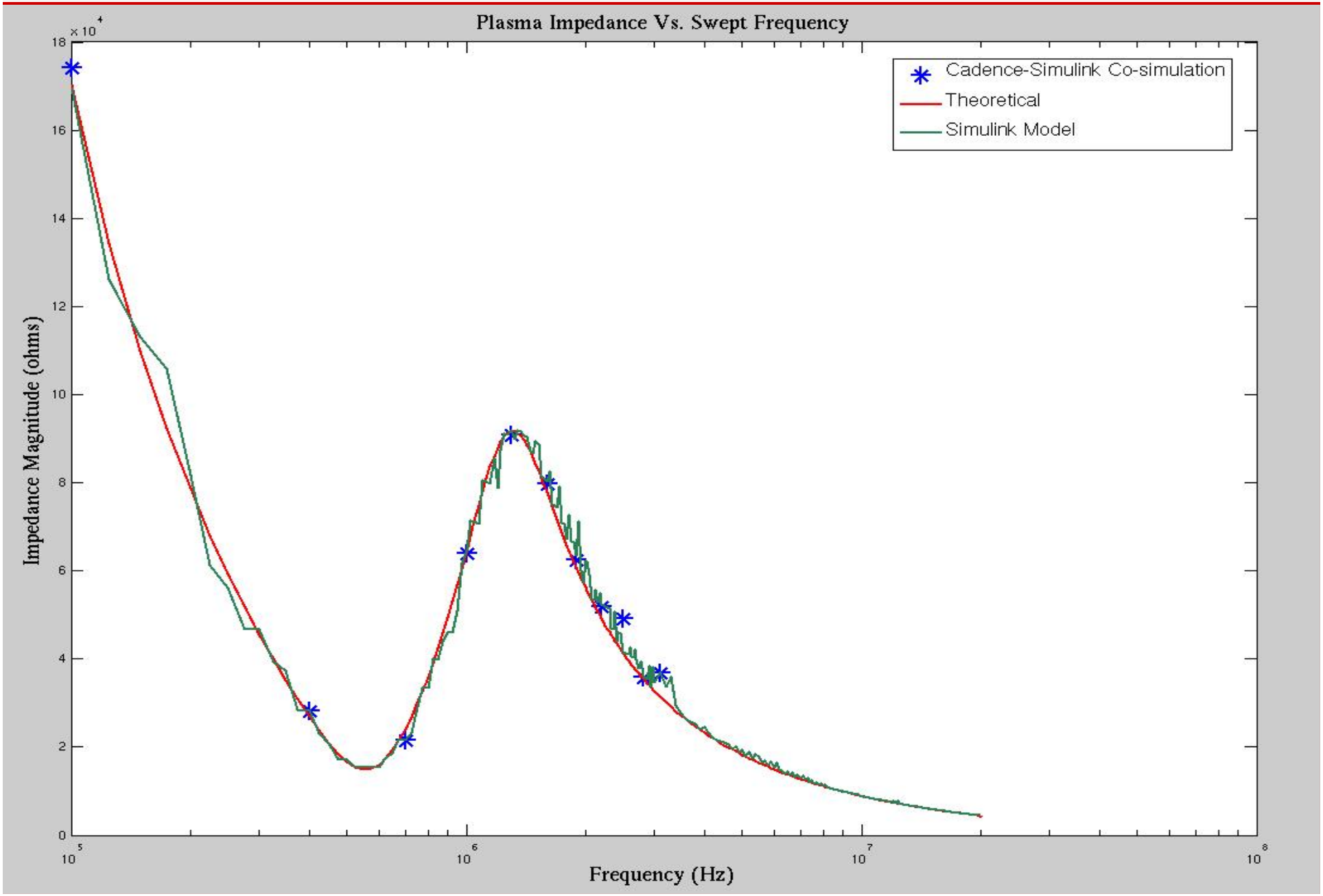
Plasma Impedance Vs. Swept Frequency
x 10^4
Impedance Magnitude (ohms)
Frequency (Hz)
Cadence-Simulink Co-simulation
Theoretical
Simulink Model
0
2
4
6
8
10
12
14
16
18
10^5
10^6
10^7
10^8

Outline

- Motivation
- Previous Work
- Proposed PIP Electronic Design
  - System Architecture
  - Advantages of the Proposed Design
  - Design Methodology
- Results
- Conclusion

CONCLUSION

- Outline of a single-chip electronic system for the PIP using the FFT technique.
- Integrates all key analog and mixed-signal components needed to perform a swept frequency impedance measurement.
- Use of matched ADCs, decreases the instruments sensitivity to transient spikes.
- Integrating the analog components on a single chip, drastically reduces the weight and volume of the PIP.
- Customization of key components increases the overall system efficiency.
- Use of the FFT technique, improves the noise immunity of the system
- The use of top-down design methodology helps in characterizing and verifying the design.
- Focus on analog errors and variations helps in quantifying the accuracy of the PIP.

Acknowledgements

- This work is supported by the Space Dynamics Laboratory (SDL), Logan, UT.

  We are grateful for the technical input provided by SDL staff, particularly

  Wayne Sanderson and Chad Fish.

REFERENCES

1. Kohl, H, Ruster, R and Schlegel, “Modern Ionospheric Science,” in *European Geophysical Society*, Katlenburg-Lindau, Germany, 1996.
2. Storey L R O, “Measurement Techniques in Space Plasmas: Fields,” in *American Geophysical Union*, 1998.
3. Oya and Obayashi, “ Rocket Measurement of the Ionospheric Plasma by Gyro-Plasma Probe,” in *Rep. Ionos. Space Res.*, Japan, pp.1-8 ,1967.
4. Steigies, C.T., Block, D., Hirt, M., Hipp, B., Piel, A., and J. Grygorczuk, “Development of a fast impedance probe for absolute electron density measurements in the ionosphere,” *J. Phys. D:Appl. Phys*., vol. 33, pp. 405—413, 2000.

REFERENCES

5. Blackwell, D.D., Walker, D.N., and W.E. Amatucci, "Measurement of absolute electron density with a plasma impedance probe," *Review of Scientific Instruments*, 76, 023503, February 2005.

6. Hummel, A., "The Plasma Impedance Probe: a Quadrature Sampling Technique," *M.S. Thesis*, Utah State University, Logan, UT, 2006.

7. Sanderson, W., "The History and Dynamics of the Plasma Impedance Probe," *M.S. Thesis*, Utah State University, Logan, UT, 2007.