Integrating Lithium Polymer Charging and Peak Power Tracking on a CubeSat Class Satellite

Dan Kaste, Dan Brinks, Jim Moore, Hugh White Zach Palmer and Will Holmes

TAYLOR UNIVERSITY

Presentation Overview

- Students Involved
- Mission Summary
  - Design for Assembly
  - Mesh Network
  - Science Instruments
- Power System
  - Design Principles
- Summary / Conclusion

Students Involved

- Dan Kaste
- Hugh White
- Dan Brinks
- Jared Sutter
- Jim Moore
- Zach Palmer

Mission Objectives

- Demonstrate a functional wireless mesh network in orbit
- Take concurrent multipoint measurements of space plasma density
- Detect Very Low Frequency (VLF) “Whistler Waves” with spatial and temporal resolution.
- Langmuir Plasma probe and VLF must be able to interface into Boston University’s BUSAT
- Satellite must Demonstrate a high level of modularity, allowing subsystems to be reused on future missions and on BUSAT

Satellite System

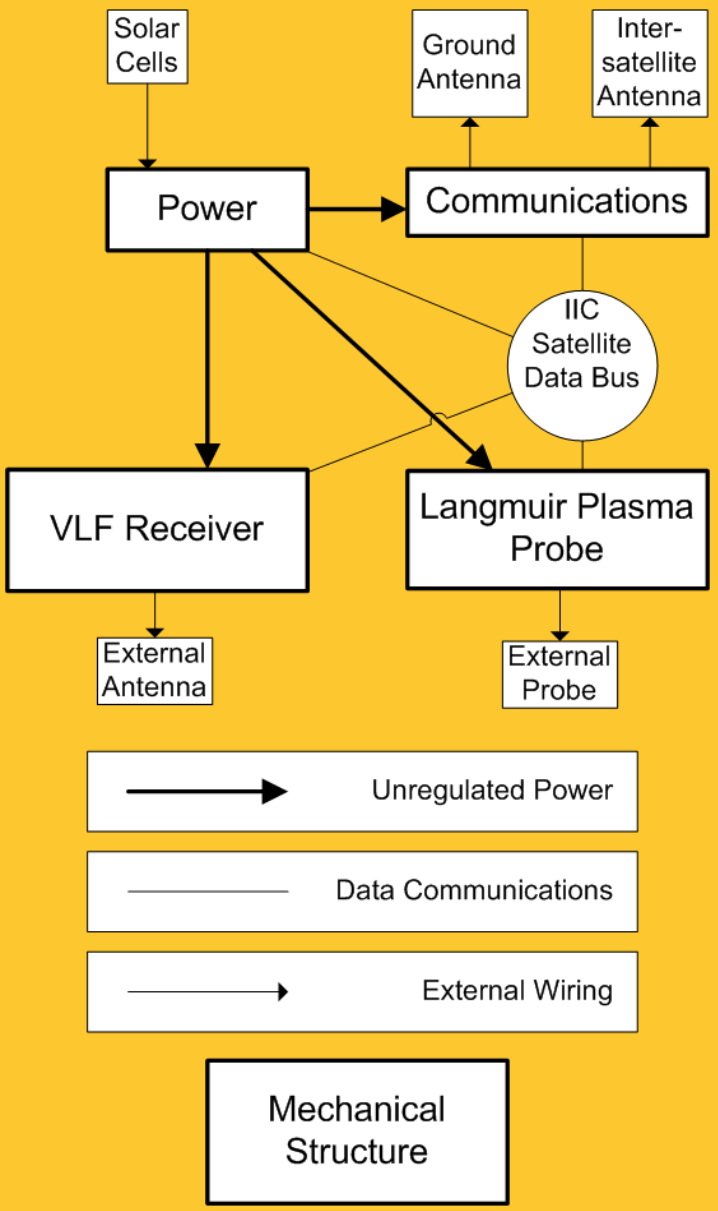

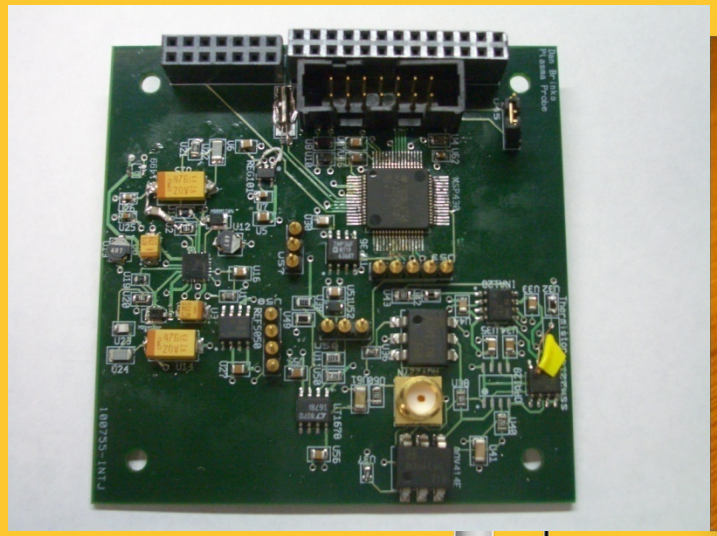

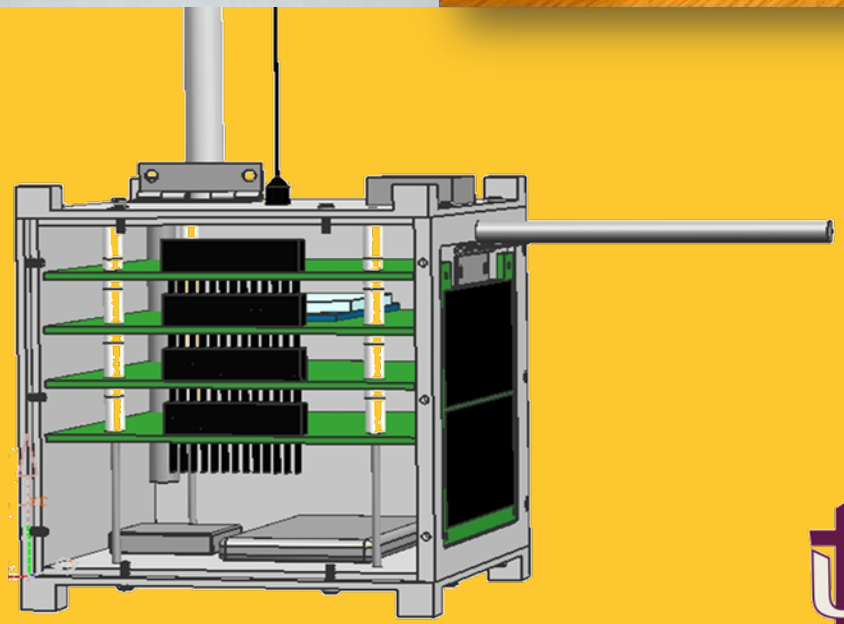

Mission Objectives

- Demonstrate a functional wireless mesh network in orbit
- Take concurrent multipoint measurements of space plasma density
- Detect Very Low Frequency (VLF) “Whistler Waves” with spatial and temporal resolution.
- Langmuir Plasma probe and VLF must be able to interface into Boston University’s BUSAT
- Satellite must Demonstrate a high level of modularity, allowing subsystems to be reused on future missions and on BUSAT

Demonstrate a Mesh Network (Zigbee or 802.15.4)

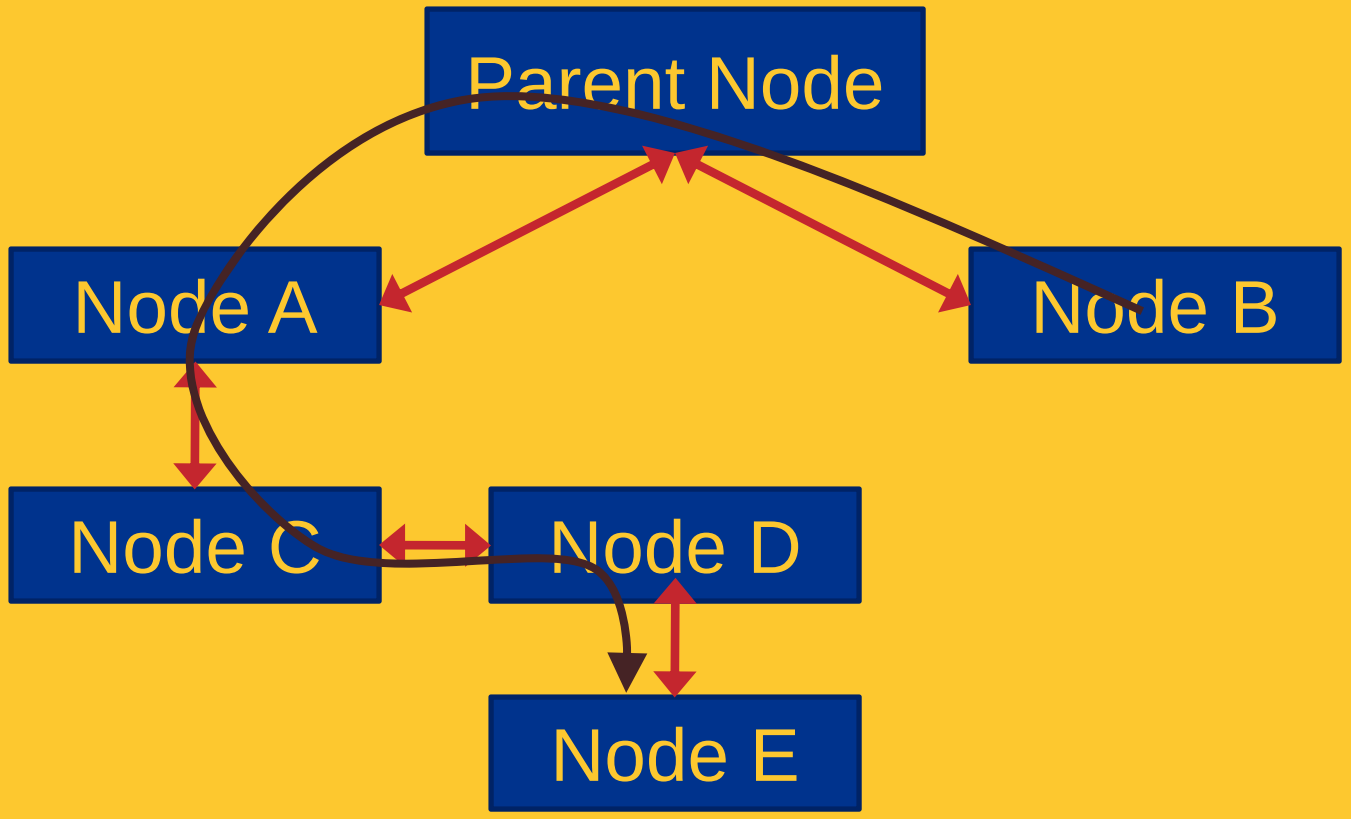

Demonstrate a Mesh Network (Zigbee or 802.15.4)

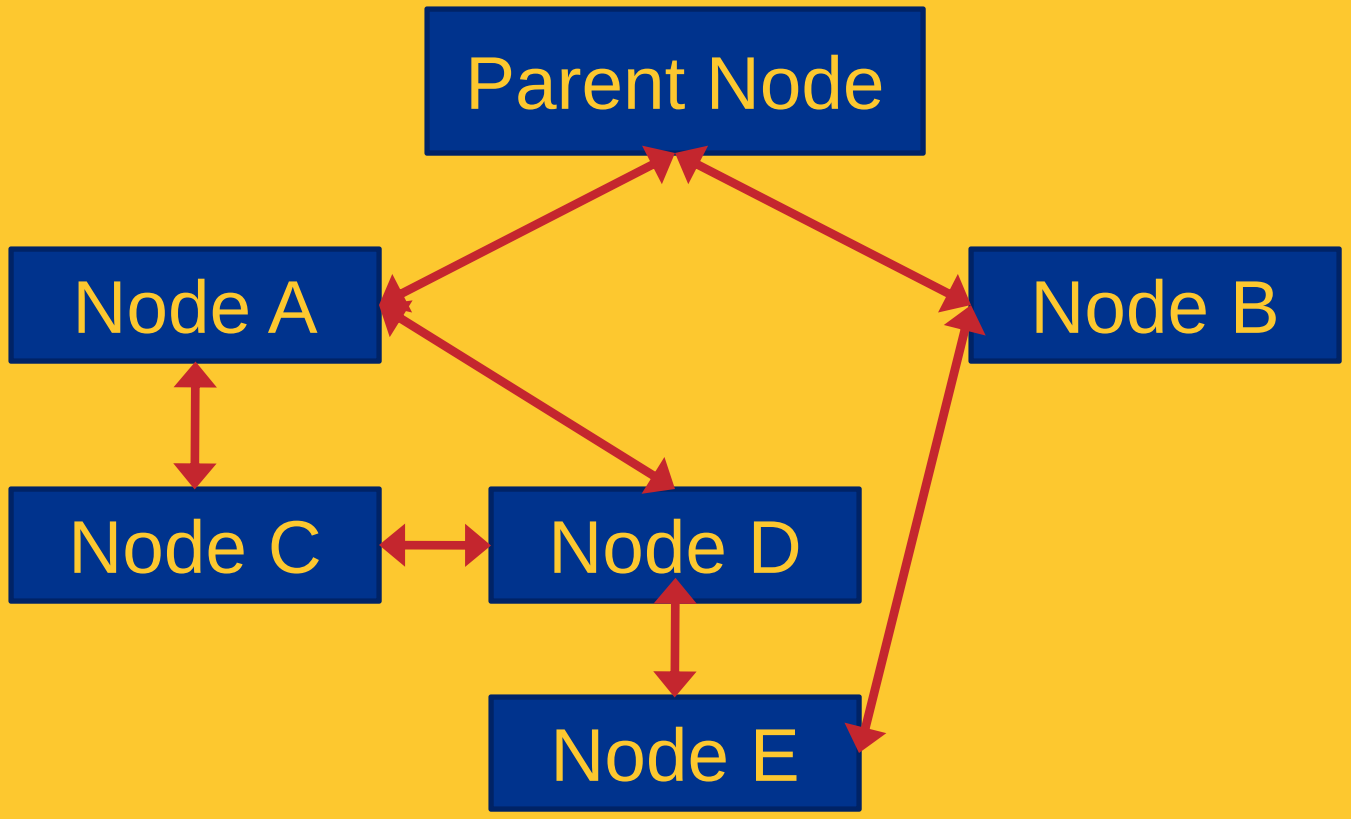

Demonstrate a Mesh Network (Zigbee or 802.15.4)

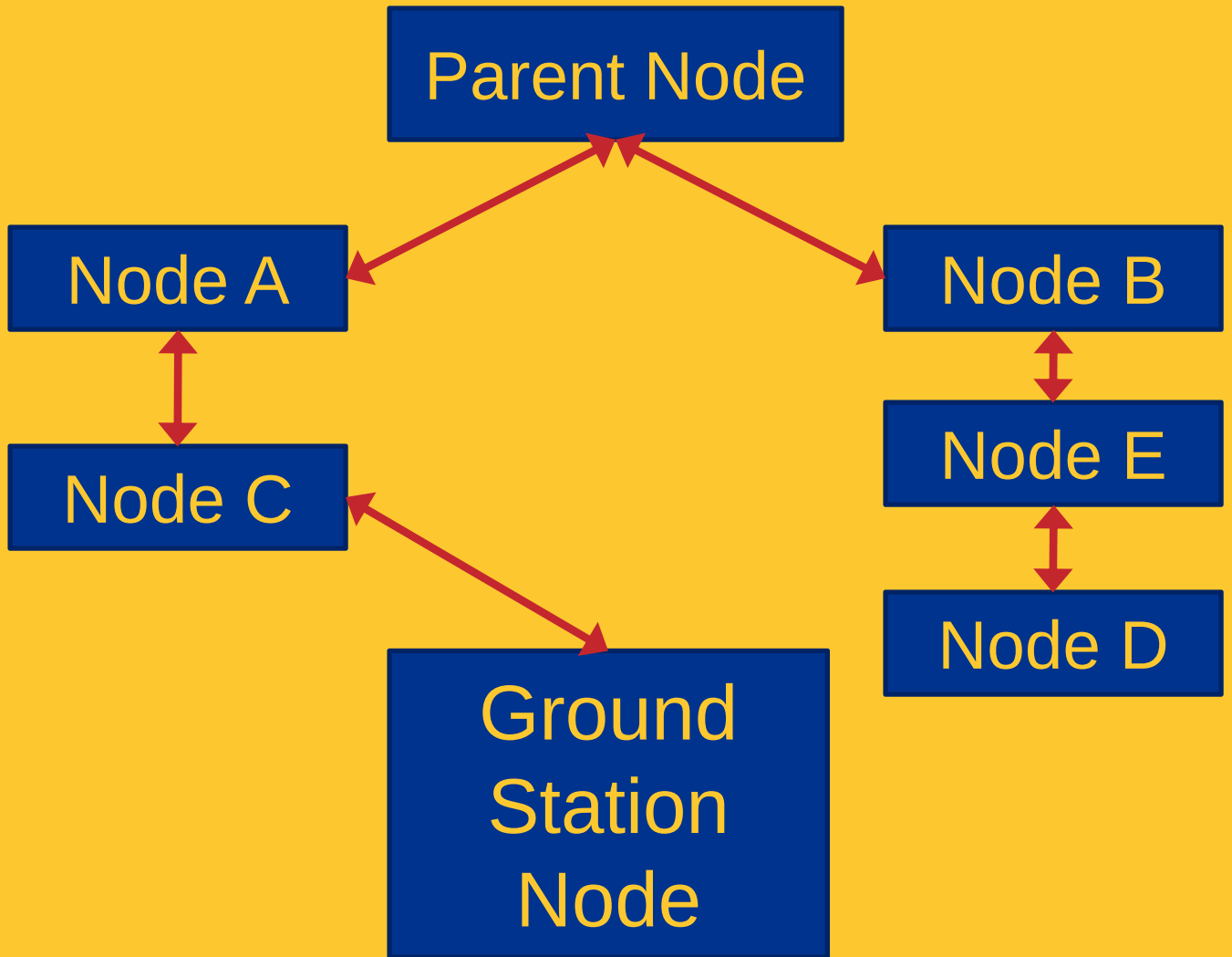

Demonstrate a Mesh Network (Zigbee or 802.15.4)

Node

Node

de B

de E

de D

Node

Mission Objectives

- Demonstrate a functional wireless mesh network in orbit
- Take concurrent multipoint measurements of space plasma density
- Detect Very Low Frequency (VLF) “Whistler Waves” with spatial and temporal resolution.
- Langmuir Plasma probe and VLF must be able to interface into Boston University’s BUSAT
- Satellite must Demonstrate a high level of modularity, allowing subsystems to be reused on future missions and on BUSAT

Mission Objectives

- Demonstrate a functional wireless mesh network in orbit
- Take concurrent multipoint measurements of space plasma density
- Detect Very Low Frequency (VLF) “Whistler Waves” with spatial and temporal resolution.
- Langmuir Plasma probe and VLF must be able to interface into Boston University’s BUSAT
- Satellite must Demonstrate a high level of modularity, allowing subsystems to be reused on future missions and on BUSAT

Langmuir Plasma Probe

- Purpose:
  Measure low energy, thermal electrons (0 to 6 eV) (L1-2)
- Returns both Density and Energy (Temperature)

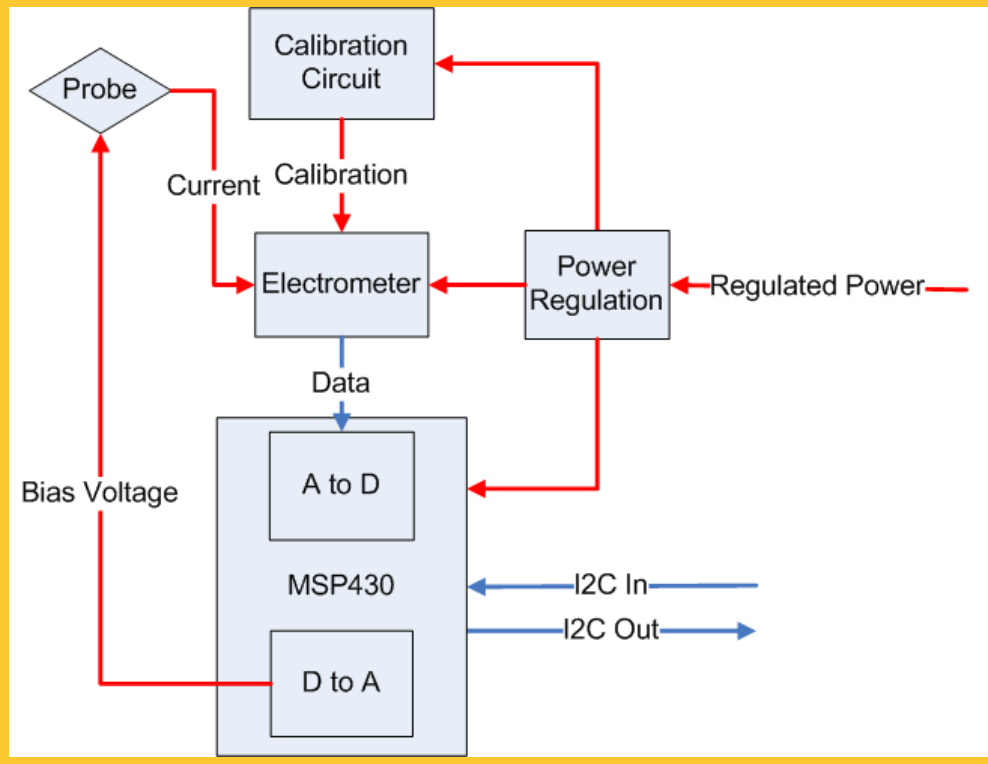

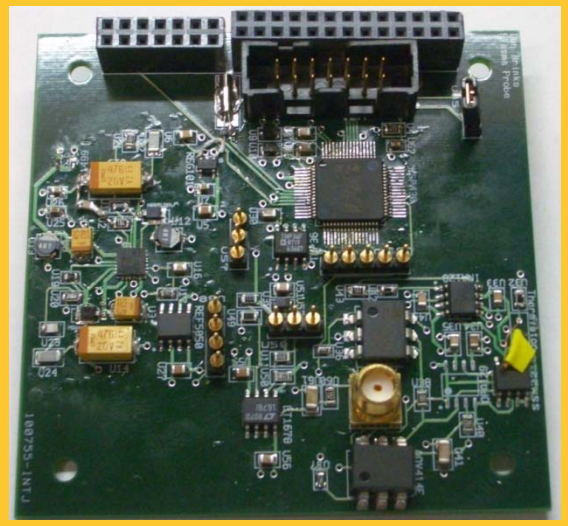

VLF Receiver

- Detect “Whistler Waves.”

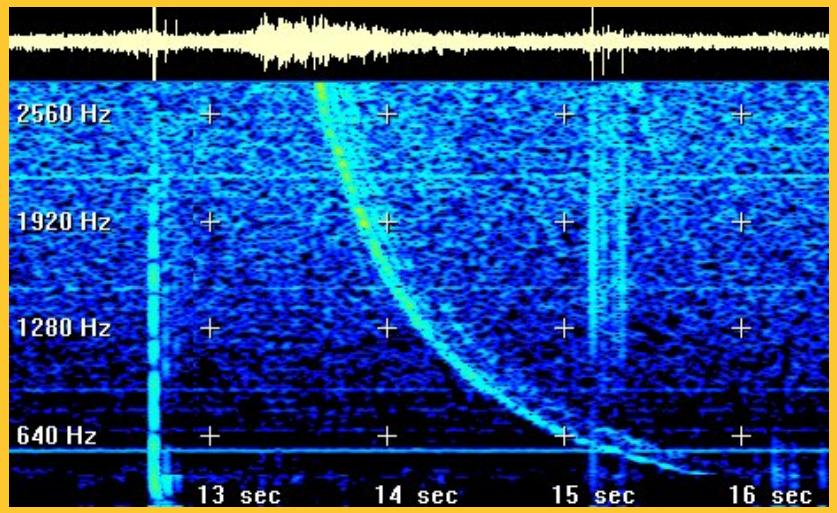

Image from Stanford website

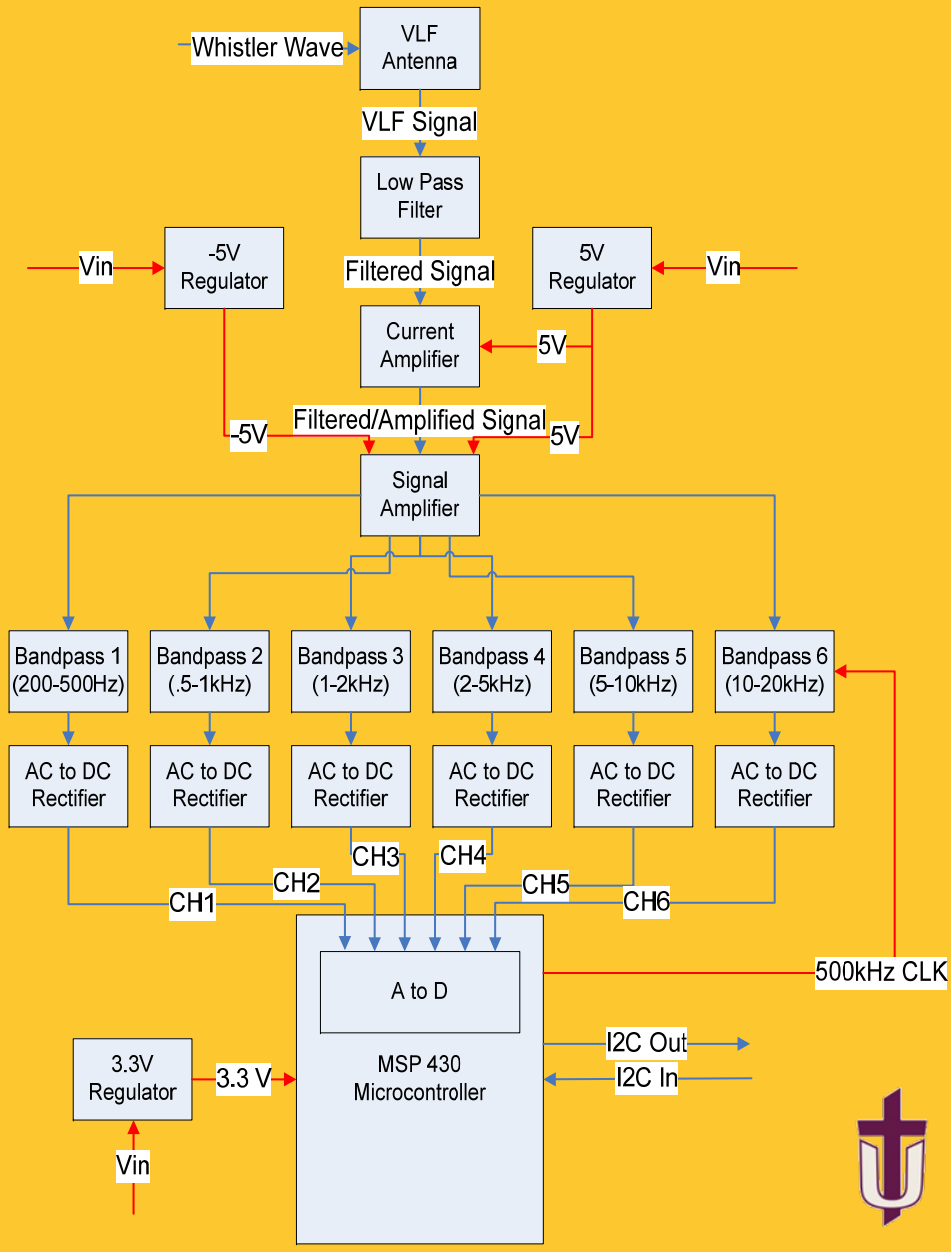

Presentation Overview

- Students Involved
- Mission Summary
  - Design for Assembly
  - Mesh Network
  - Science Instruments
- Power System
  - Design Principles
- Summary / Conclusion

Power System Requirements

- Maintain Downlink Capability
  - Available power always above 2 watt hours
  - Charge batteries correctly
- Maximize Power Flow into Satellite

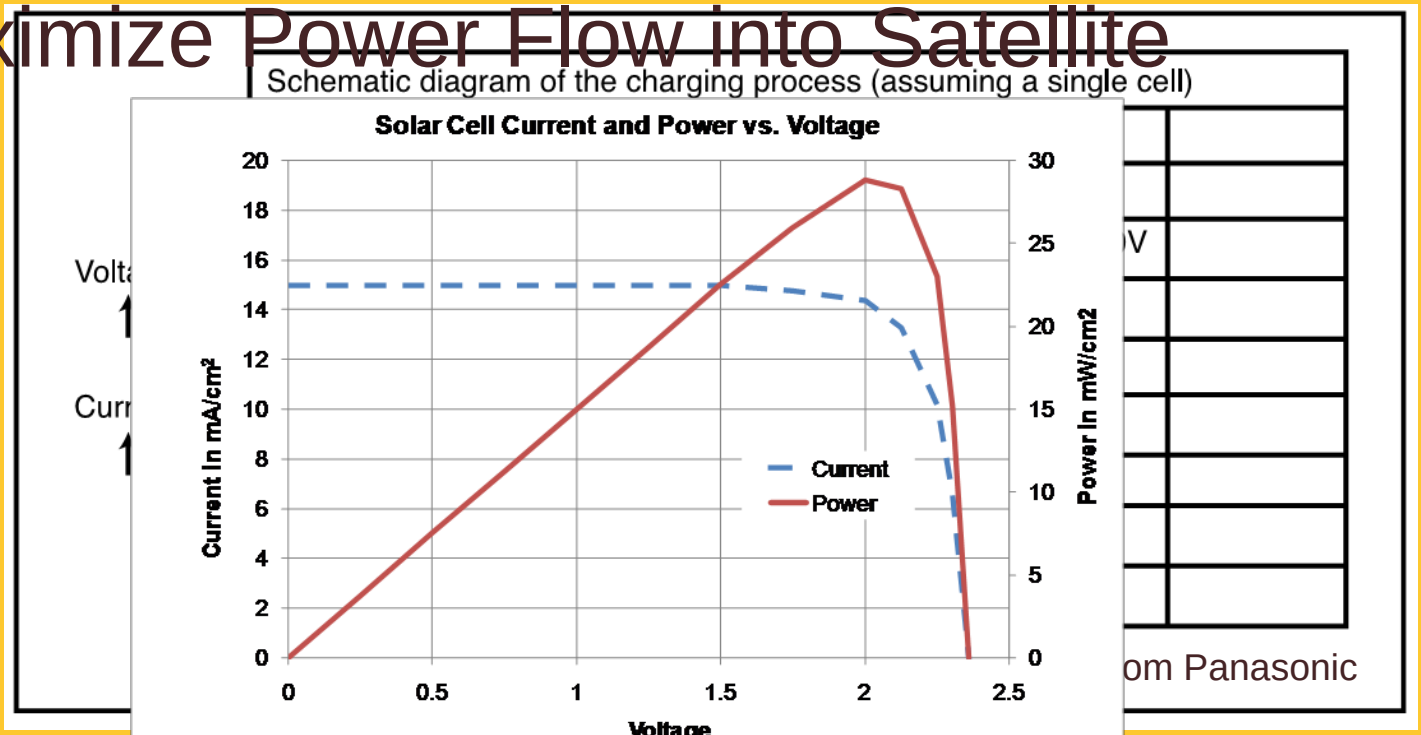

Power System Requirements

- Maintain Downlink Capability
  - Available power always above 2 watt hours
  - Charge batteries correctly
- Maximize Power Flow into Satellite
- Distribute Power to Satellite
- Have an efficiency greater than 80%

Power System

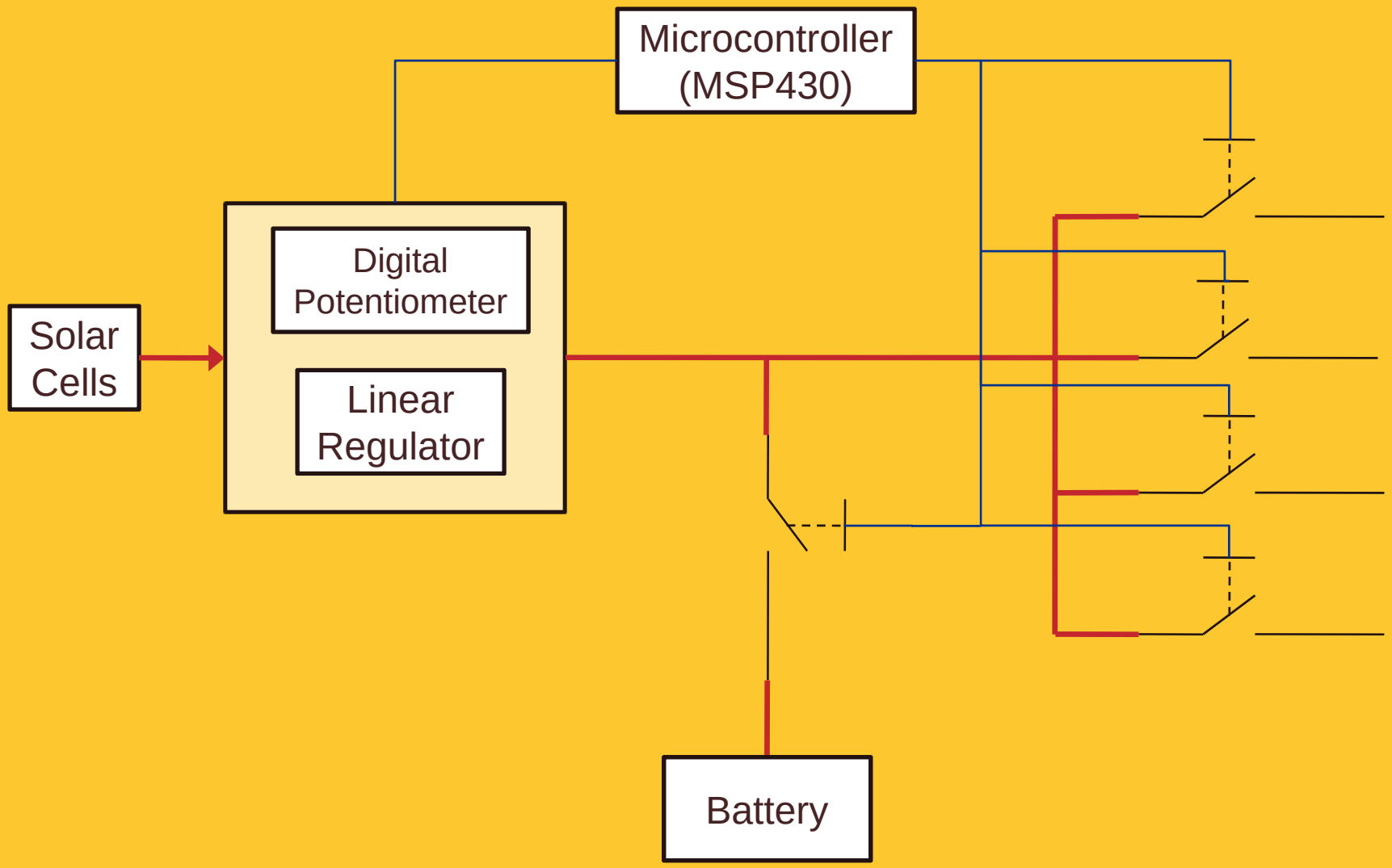

Power System

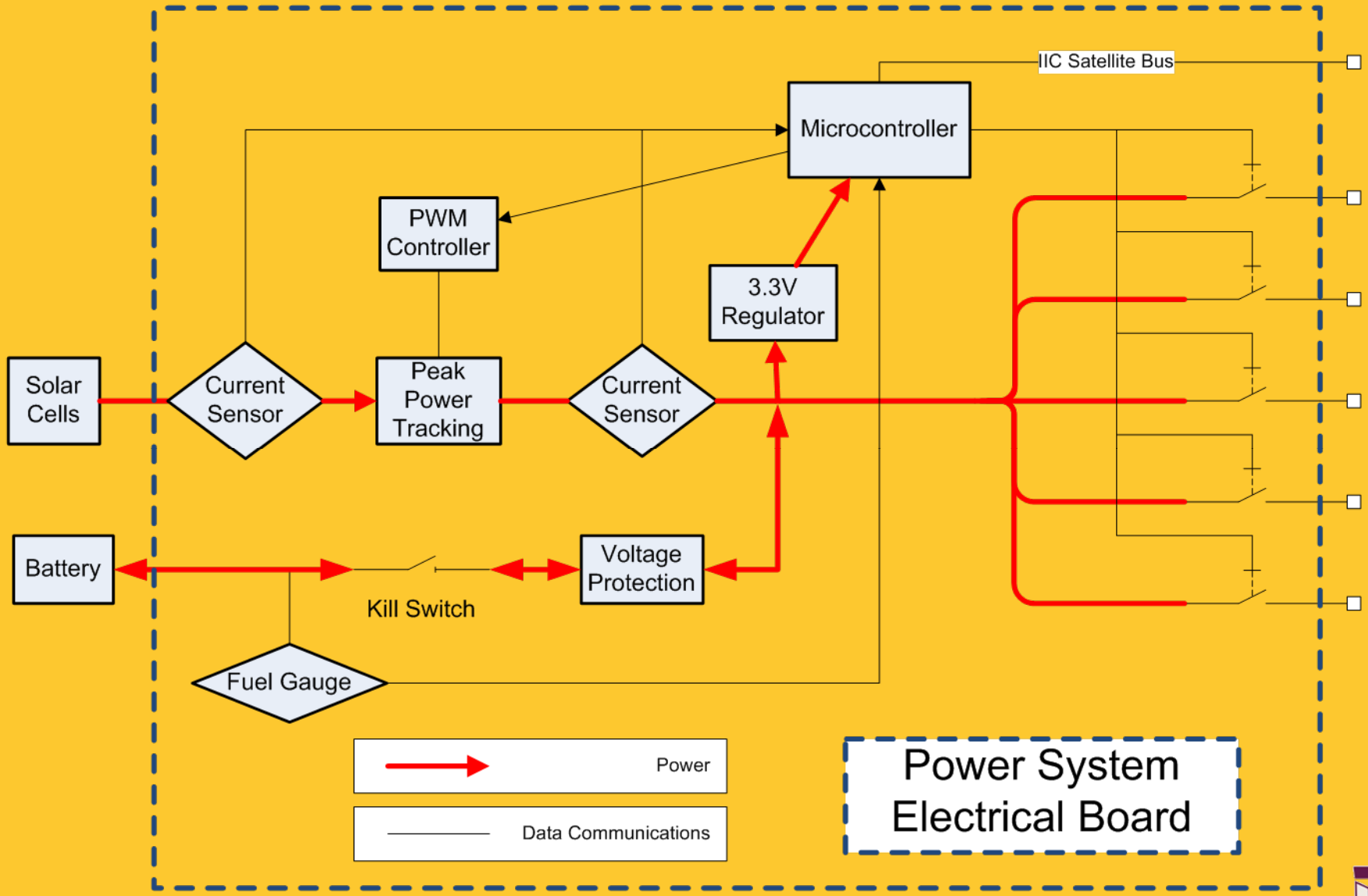

Status

- Implementation of Peek Power Tracking / Li Battery Charging not Complete
  - First Iteration of Circuit Board Complete
  - Software awaiting Hardware
  - Look for Testing Results at Booth at Next Year's Conference
- Satellite Subsystems Developed
  - VLF, Plasma, Communications (Mesh Network), System

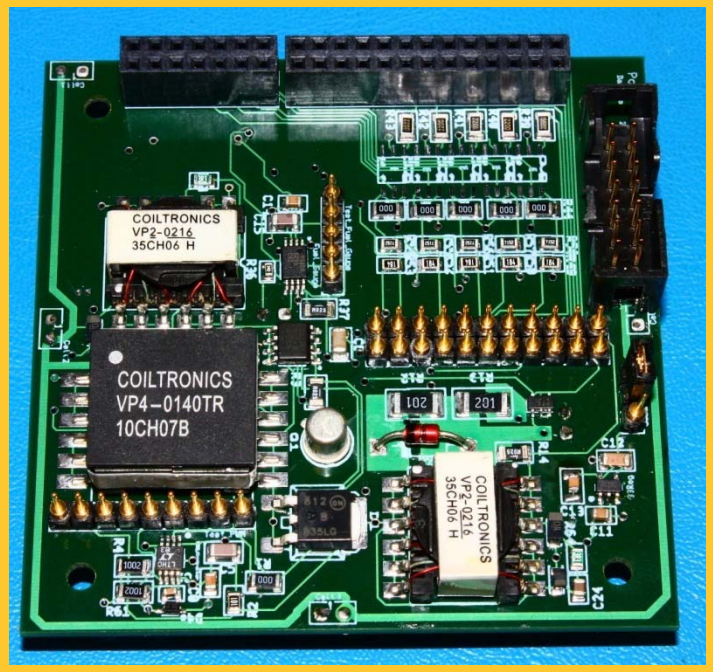

Lessons Learned / Summary

- Pay Attention to Assembly and Systems Engineering from the beginning of a Project.
- Make sure that Complexity does not increase.
- While satellite not delivered, six students were trained.