21st Annual AIAA/USU

Conference on Small Satellites

A constellation of three micro satellites uses UV and visible sensors to demonstrate target acquisition and tracking

Space Dynamics Laboratory

Utah State University Research Foundation

Approved for Public Release
07-MDA-2554 (14 JUNE 07)

Participating Organizations/Co-authors

- Missile Defense Agency – Advanced Systems
  - Hank Barcikowski – Co-author, Sponsor
- Space Dynamics Laboratory, Utah State University
  - Dean Wada – Program Manager
  - Steven Brown – Systems Engineer
  - Thomas Humpherys – Division Director
  - Mark Greenman – Lead Software Engineer
  - Ali Ghafourian – Tracking Algorithm
  - Charles Harris – Acquisition Algorithm
  - Carl Howlett – Systems Engineer
- SpaceDev
- Draper Laboratory

Outline

- Program objectives
- System overview
- Spacecraft
- Payload
- Summary

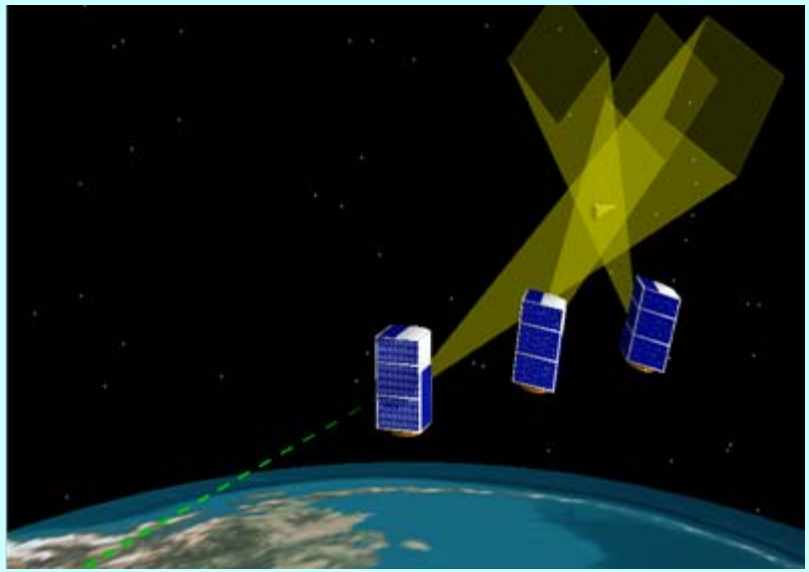

DSE Program Objectives

- **Acquire and track targets in flight using micro satellites to form 3D tracks and communicate to Ballistic Missile Defense System (BMDS)**
- **Perform engineering analysis, system definition, and design of satellites and ground system**
- **Build, test, integrate with launch vehicle, and operate satellites in orbit**
- **Demonstrate the potential impact of a micro satellite concept to meet mission needs of Ballistic Missile Defense (BMD)**
- **Show that affordable, industry-standard COTS devices, systems, and processes can be used in space and on the ground, to solve key problems associated with acquiring and developing 3D tracks of ballistic targets**

Program Goals/DSE Philosophy

- Individual Spacecraft Mass <100 kg
- Small integrated project teams
- Power positive in all attitudes
- Launch vehicle flexibility
- Orbit flexibility
- Rapid deployment
- Modular/scalable design
- Multiple-use spacecraft bus

- **LOWEST COST POSSIBLE**

DSE Spacecraft

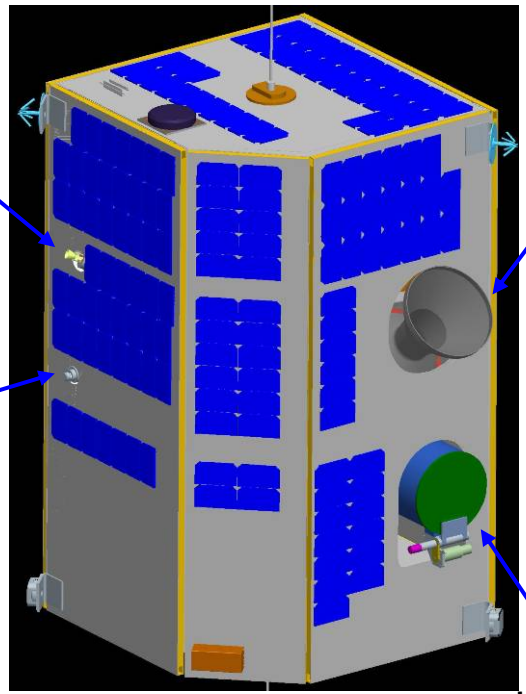

- Spacecraft provider: SpaceDev
- Spacecraft features:
  - 3-axis stabilized
  - Intersatellite communication system
  - Plug and play architecture
- Spacecraft specifications (including payload):
  - Mass: <100 kg
  - Power consumption (nominal): <120 watts

SpaceDev Competition Sensitive

DSE Payload

- Payload provider: SDL

- Instrument
  - Foreoptics:
    - Cover
    - Internal and external baffles
    - Three-mirror anastigmat telescope
  - Visible/UV camera:
    - Modified Hamamatsu C8677 camera
    - Shutter
    - UV/visible filter wheel

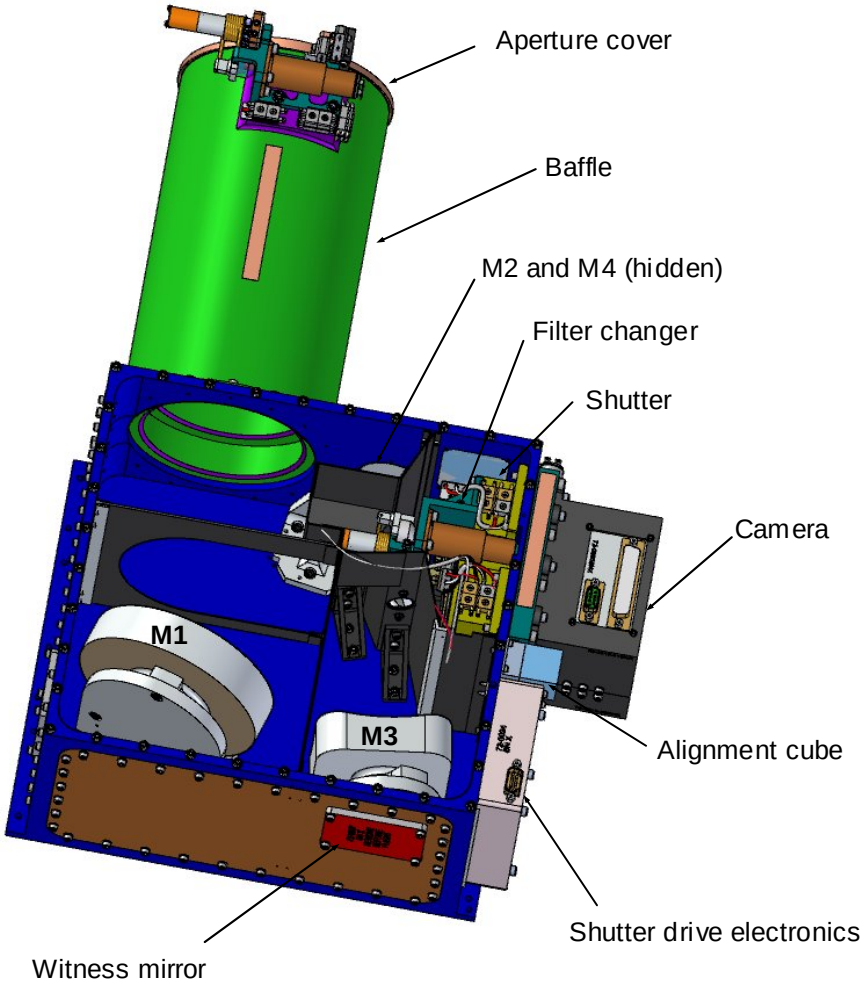

Payload Specifications

- Electronics
  - 3U chassis with cPCI backplane
  - COTS single board computer
  - COTS I/O frame grabber
  - COTS memory board
  - Power conversion and conditioning

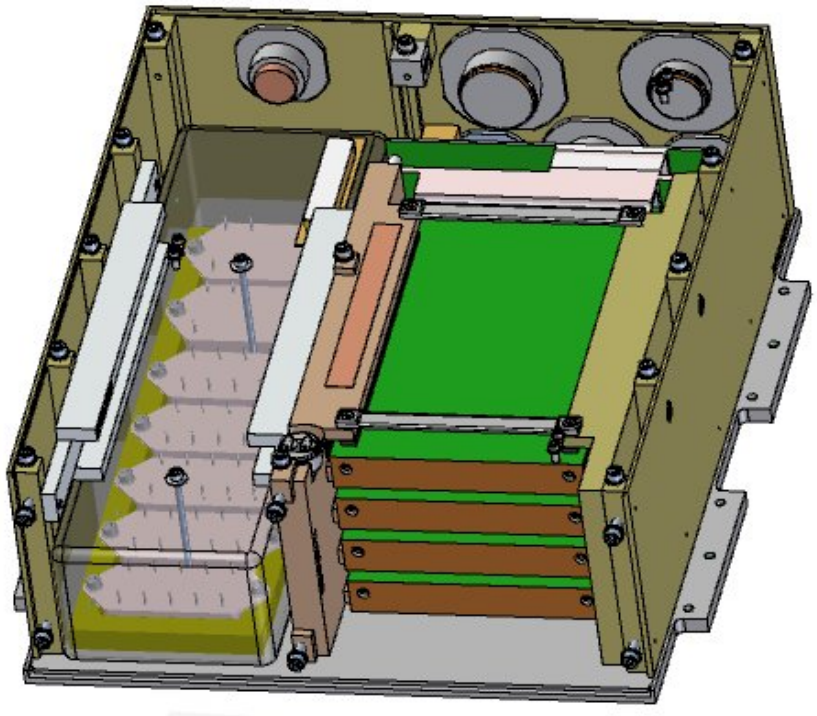

- Payload specifications
  - Mass: <32 kg
  - Power (nominal): <50 watts
  - Entrance pupil size: 100 mm
  - F number: 3.5

Functional Block Diagram

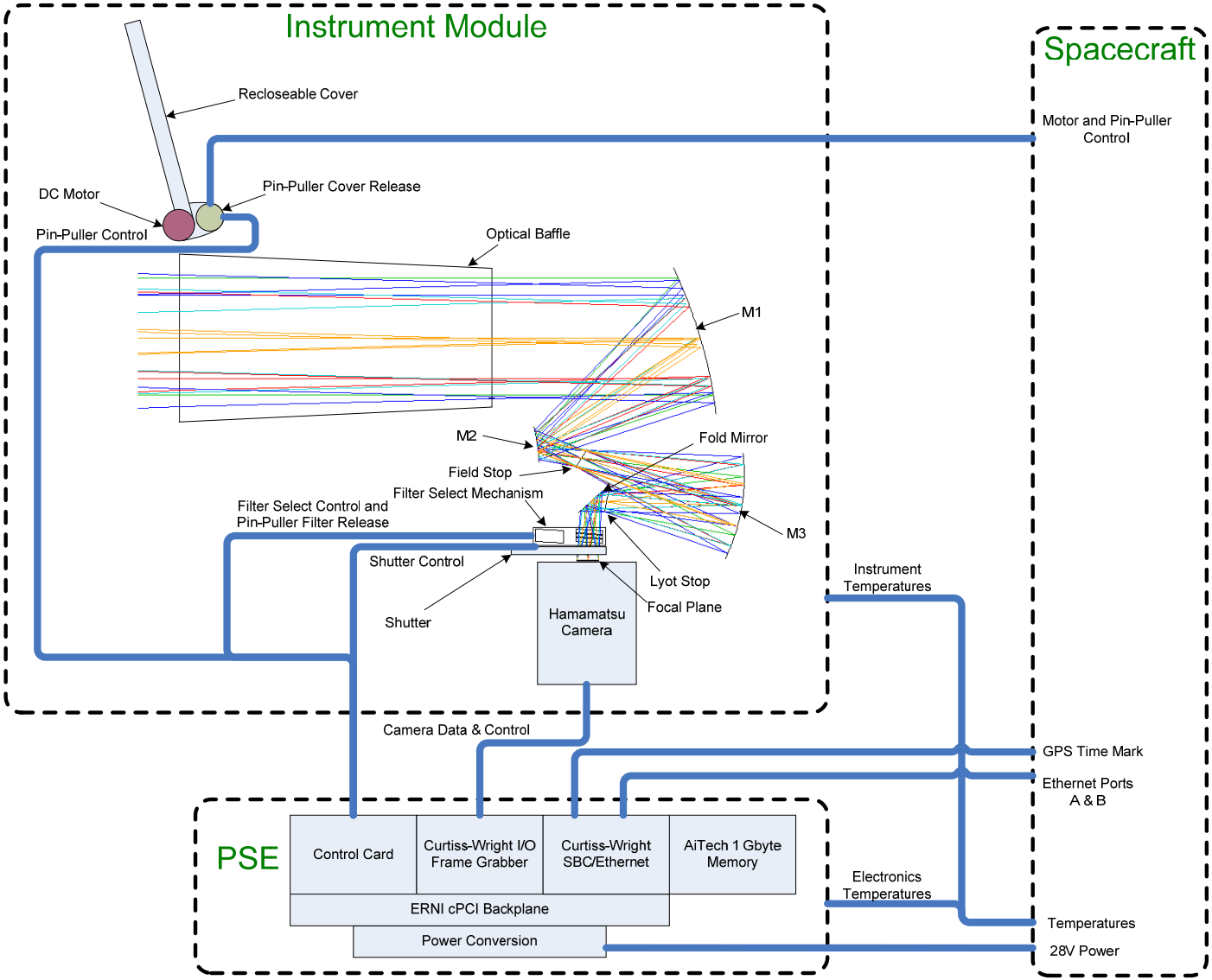

Acquisition Algorithm

- Acquisition algorithm
  - The distinguishing feature of a target is its motion against the celestial background
  - Camera tracks the expected target position, star images appear to move from frame to frame.
  - If the instrument is tracking properly, the target image should appear at about the same position in consecutive images while the stars stream by

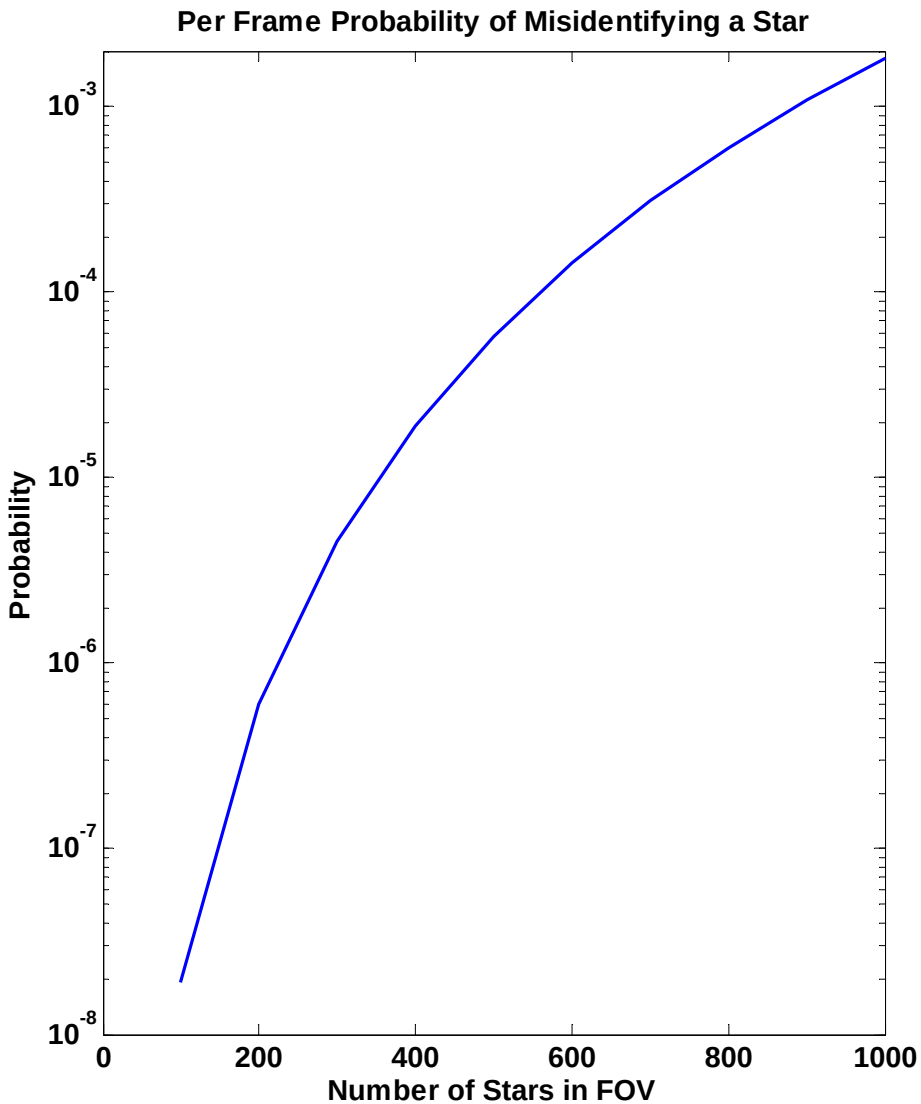

Track Algorithm

- Each SC contains three layers of Kalman filter, KF1, KF2 and KF3
  - KF1
    - Generates object sighting messages at FPA frame rate
    - Filter re-initializes (with very large target state and covariance) at KF2 rate

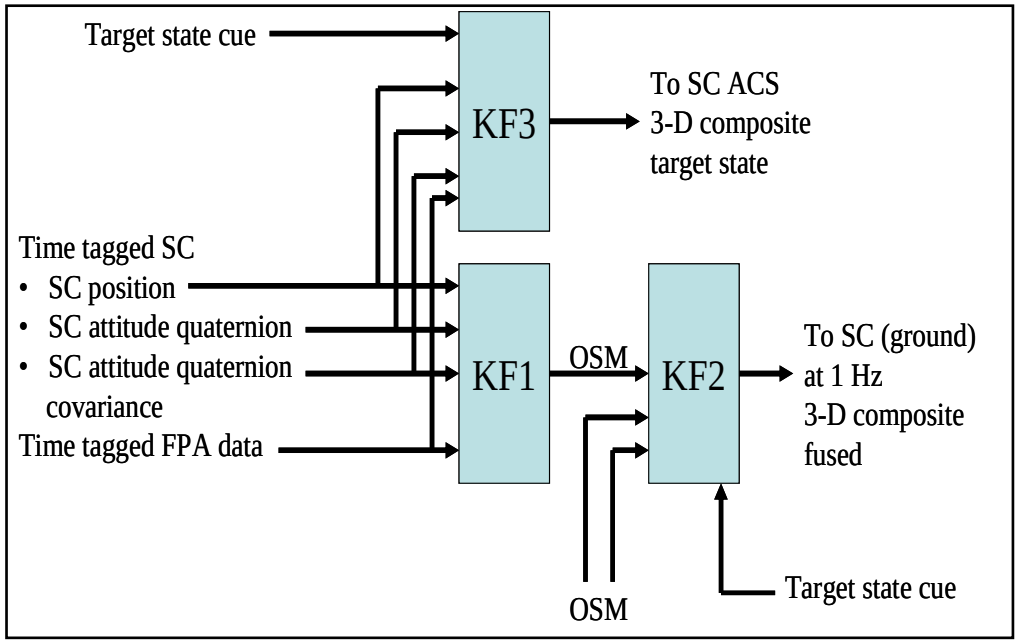

  - KF2
    - Generates composite fused 3-D target state at 1 Hz
    - Filter initializes with JNIC target state cue and target covariance
  - KF3
    - Generate composite 3-D target state at FPA frame rate to the SC ACS
    - Filter initializes with JNIC target state cue and target covariance

Software

- Software
  - Linux operating system
  - Communication to spacecraft via TCP/IP over Ethernet
  - Messaging using Common Object Request Broker Architecture (CORBA)

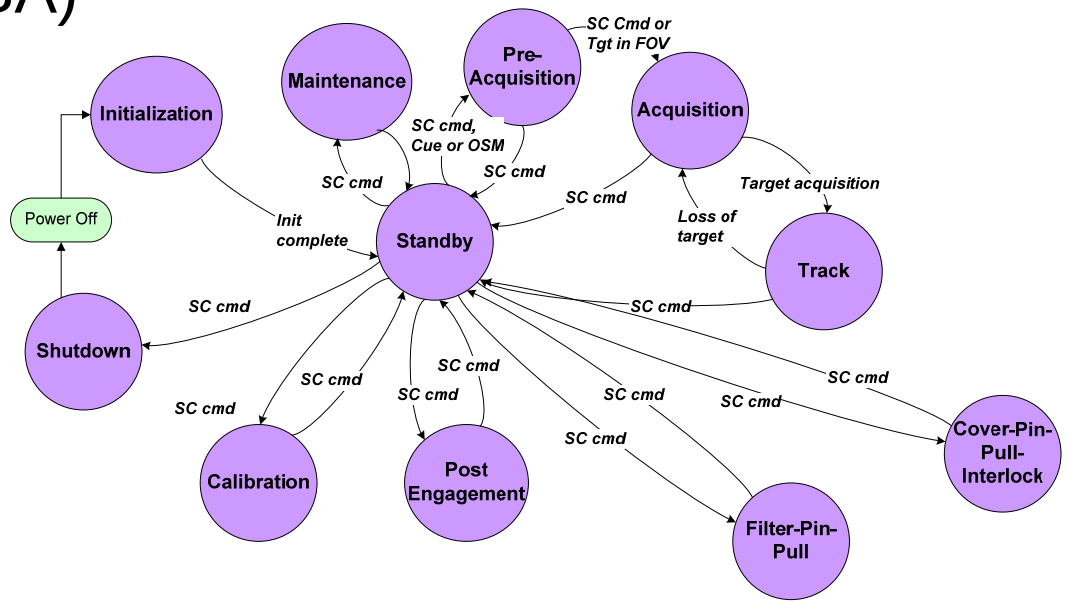

*All states have implicit fault transition to Standby and Initialization state (depending on fault)

Summary

- Successfully completed Phases I and II
  - Preliminary Design Review – January, 2005
  - Critical Design Review – March, 2006
- Currently in Phase III – Fabrication, Integration, and Testing