A Model Based Toolset for Supporting Rapid Integration and Verification of Spacecraft Electronics

Anand S Madhusoodanan
Brandon Eames
Electrical and Computer Engineering
Utah State University

Wednesday, August 29, 2007

Overview

- Motivation: Self-verification in rapidly integrated systems
- Approach: Domain Specific Modeling + Rapid Code Generation
- Modeling Devices, Device Communication
- Generating System Self Test

Rapid Spacecraft System Integration

- Responsive Space Initiative: SPA-U (USB) based plug-n-play electronics
  - Online device discovery and integration
  - “Intelligent” devices
  - xTED: Electronic Data Sheet
  - Middleware for dynamic device integration, data routing

- Question: How to verify the integrated system?
  - Were the proper devices “plugged in”?
  - Does the system have all the necessary components?

Approach

- Visual Modeling
- Virtually capture devices, system prior to building system
- Automatic code generation
  - Communications middleware API
  - On-board self test to check integrated system health

Toolflow

Graphical Modeling Tool

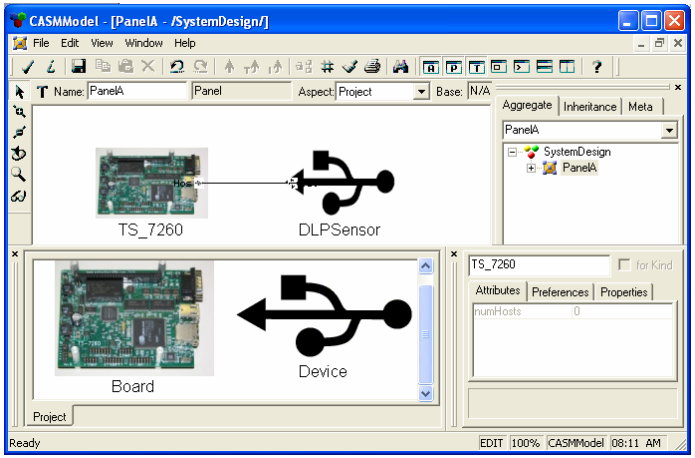

xTEDs

Auto Generation

Communications Middleware

```
int write(.......)
{
   usb_claim_interface (.....);
   if (endpoint is a bulk endpoint)
   {
      bytes_written = usb_bulk_write (............);
      usb_release_interface (...);
      return (bytes_written);
   }
   .
}
int read(.......)
{
   usb_claim_interface(.....);
   if(endpoint is a bulk endpoint)
   {
      bytes_read = usb_bulk_read(............);
      usb_release_interface(...);
      return(bytes_read);
   }
   .
   .
```

```
int write(.......)
{
   usb_claim_interface (.....);
   if (endpoint is a bulk endpoint)
   {
      bytes_written = usb_bulk_write (............);
      usb_release_interface (...);
      return (bytes_written);
   }
   .
}
int read(.......)
{
   usb_claim_interface(.....);
   if(endpoint is a bulk endpoint)
   {
      bytes_read = usb_bulk_read(............);
      usb_release_interface(...);
      return(bytes_read);
   }
   .
   .
```

On-board Self Test Software

The Generic Modeling Environment

- Tool Infrastructure for implementing Domain-Specific Modeling Languages (DSMLs)
- High-level interfaces for interpreter creation: “compiler” for the visual language
  - Translate the captured diagrams into “something useful”

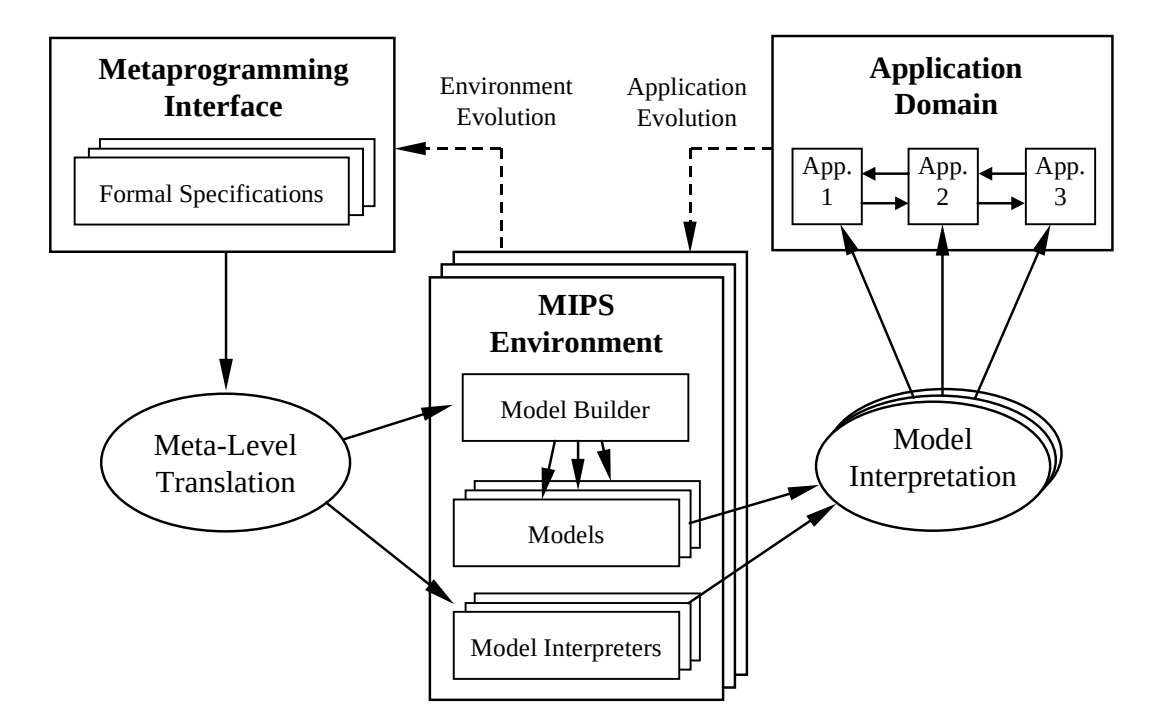

Modeling Device Communication

- Device-specific message sequences
- Facilitate determining health status of device

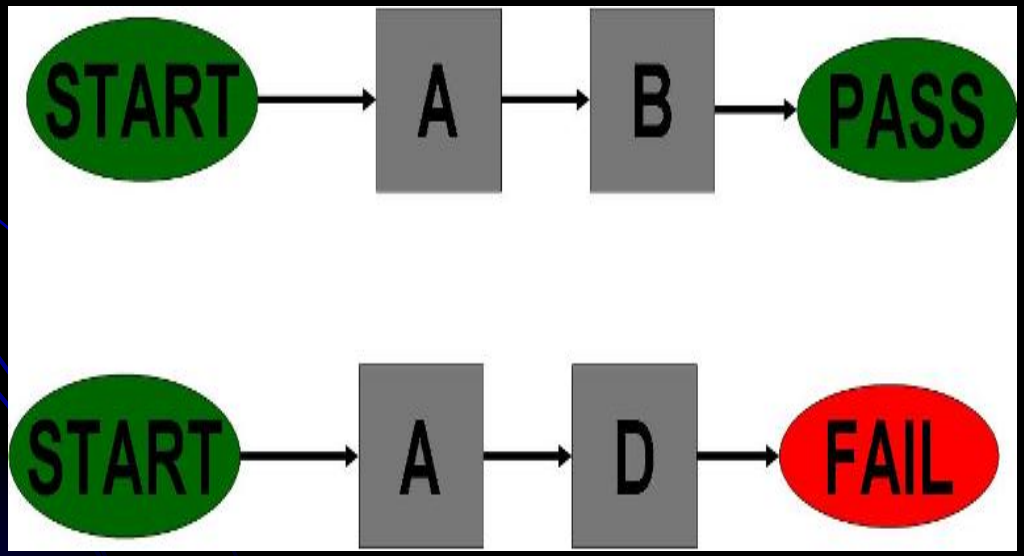

Modeling Spacecraft Electronics

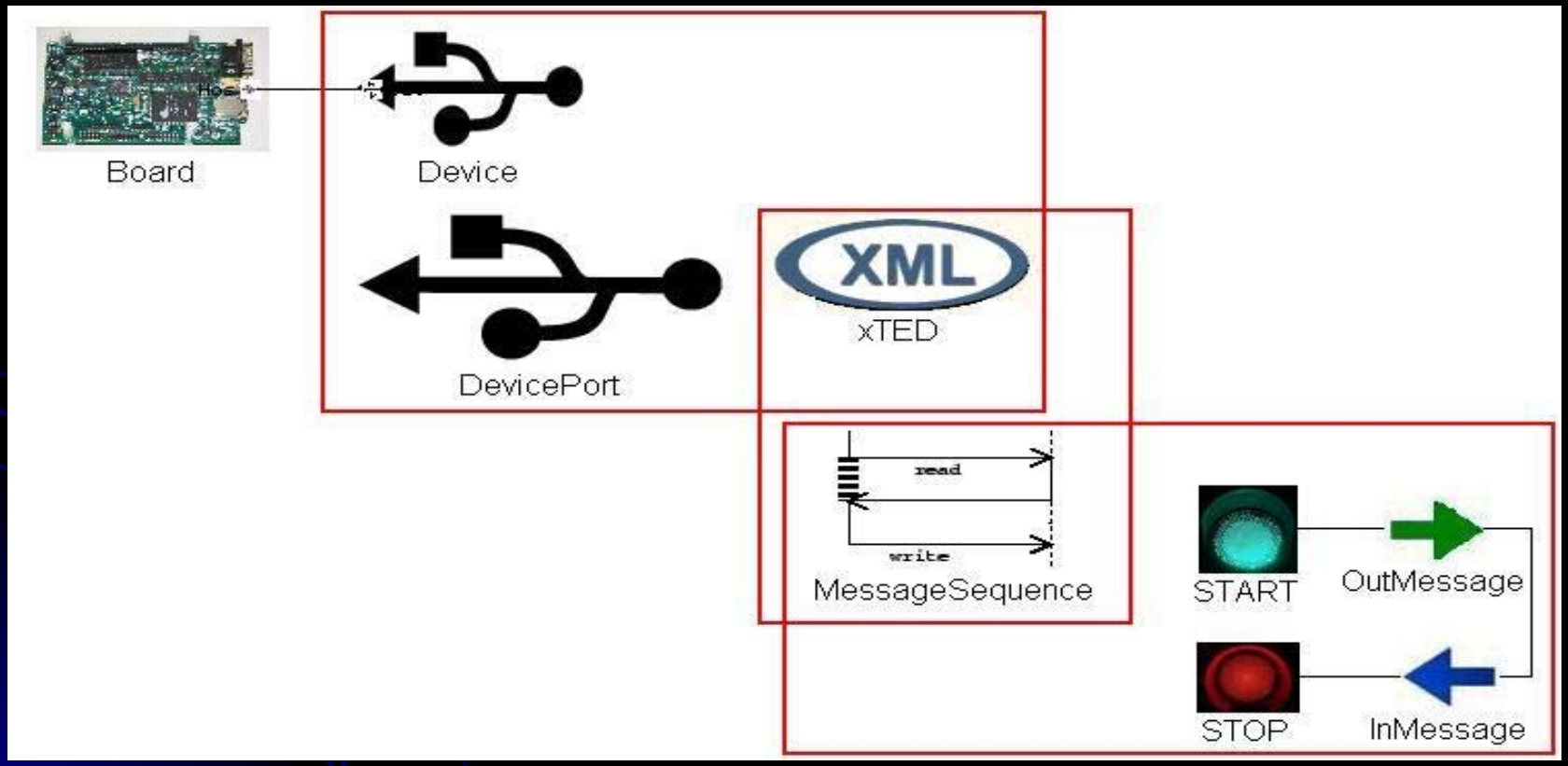

Test Platform

- Technologic Systems TS – 7260
  - ARM based processor
  - Linux
- DLP Sensor
  - Temperature Sensor
  - USB-Serial Interface
- Libusb library
  - User-space device drivers

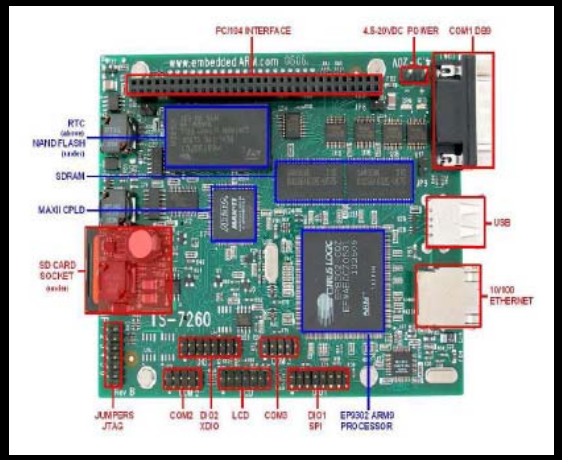

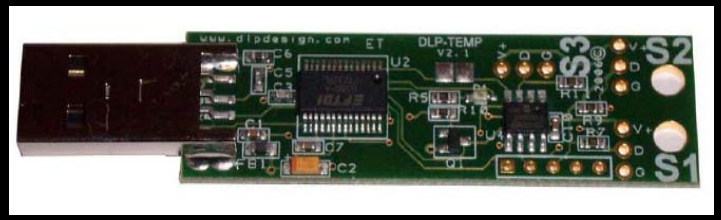

Summary of Work

- Address the problem to verification of rapidly integrated spacecraft systems
- Visual design tool
- Rapidly generate glue code that acts as middleware
- Generation of test suites
  - Probe each connected device for device health
  - Assure all devices are present