Internet Protocol (IP) as a Standard for Command and Control of Satellites

Small Satellite Conference 2005
SSC05-II-3

Jeff Janicik, Innoflight
Jay Heberle, Universal Space Network

Proprietary Information of Universal Space Network, Millennium Space Systems and Innoflight

Introduction

- Cost effective and responsive spacecraft are driving satellite programs to implement readily available protocols that can be used from end-to-end in the life cycle of mission development and operations
- TCP/IP is based on common protocols and it enables affordable and responsive communications when implemented *in standard form*
  - Reduces spacecraft engineering of specialized interfaces, software, and testing
  - Use of “true” COTS comm. equipment
- This presentation will focus on two elements:
  - Pros/cons of straight TCP/IP for satellite communication
  - How TCP/IP connectivity is being extended to space by using USN ground stations as “access points”

Standards at Each Comm. Layer

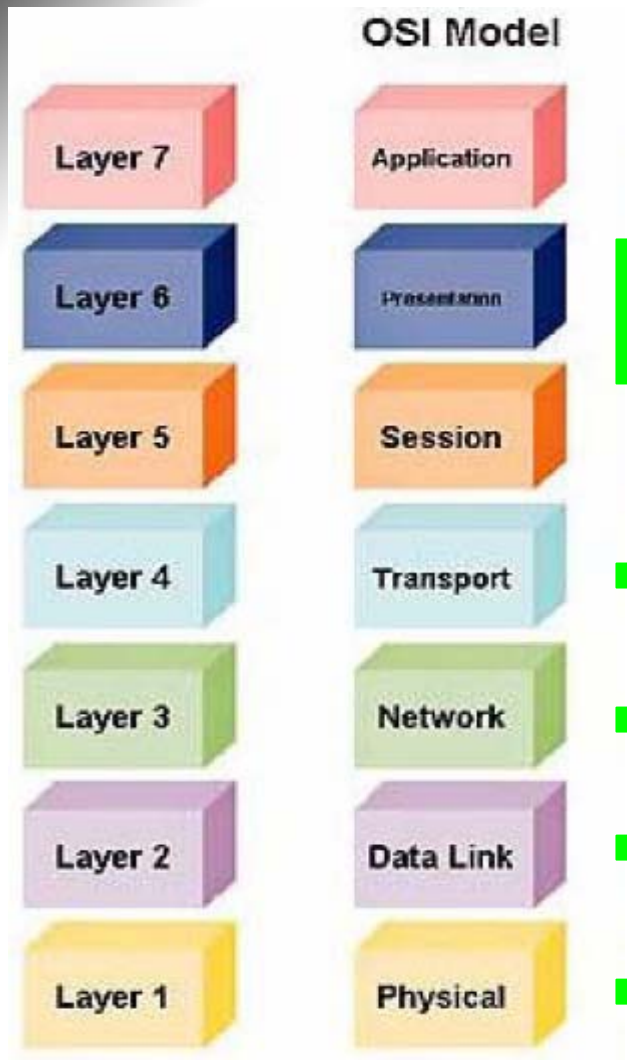

FTP, Telnet, NTP

TCP, UDP, ICMP

IP

HDLC

RF bands, various methods

Advantages to Using TCP/IP Comm.

- Spacecraft subsystems can be IP Nodes on a Local Area Network (LAN)
- Avoids unique communication protocols for each periphery or subsystem
- Practically every vendor has an IP stack built right into their BSPs (Board Support Package)
  - These purchased stacks have thousands of hours behind them
- Custom protocol (e.g., SGLS, CCSDS, X-25) compatible transceivers can be replaced by very affordable telemetry equipment
- Proliferation of IP-based networks on the ground provides seamless connectivity
  - “Sensor to Shooter” operations realized
- Future capability
  - Whenever open, tried, proven and evolving standards are used, a system is guaranteed to provide a reliable and expandable capability for the future

Spacecraft LAN Communications

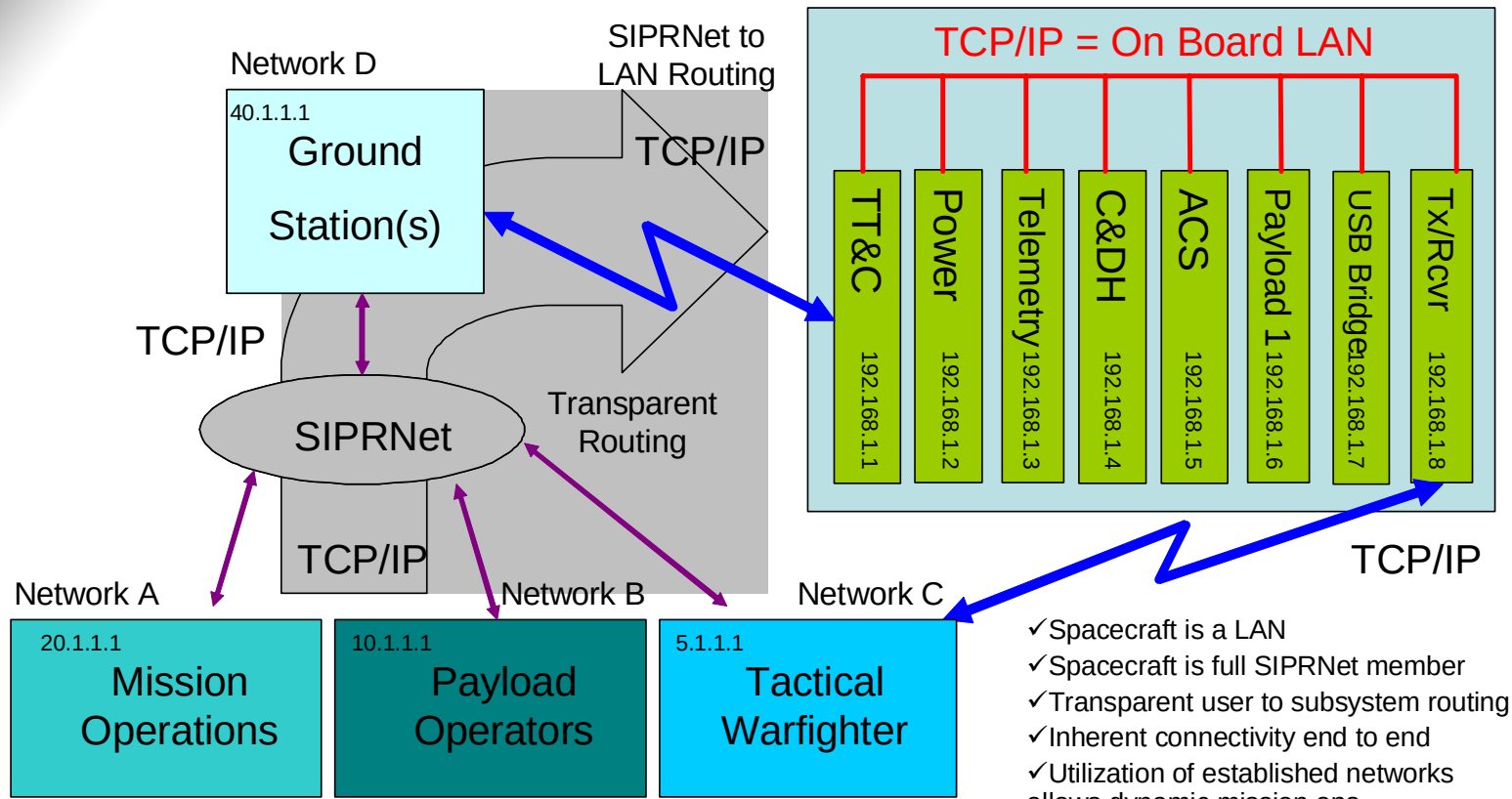

SIPRnet And Internet Can Be Used Interchangeably

- ✓Spacecraft is a LAN
- ✓Spacecraft is full SIPRNet member
- ✓Transparent user to subsystem routing
- ✓Inherent connectivity end to end
- ✓Utilization of established networks allows dynamic mission ops
- ✓Utilizes established resources at no R&D cost and minimal usage cost
- ✓Warfighter has direct link from Spacecraft or SIPRNet

Disadvantages to Using TCP/IP Comm.

- Latency on long transmission paths combined with the noise associated with wireless links is unfavorable to TCP congestion control algorithm
- Reliable transport for UDP
  - Custom protocols being used and considered but none have been RFC'd
- Bandwidth overhead
  - Exacerbated by the need to reduce power requirements on a satellite
- Asymmetric links (typically low uplink rates for satellites)
  - TCP throughput performance becomes limited above 50:1

Ground Stations as Access Points

USN, MSS And Innoflight Have Teamed Together To Establish Efficient IP Link Operations In A Seamless Internet-based User Segment

- **GOAL:** Incrementally advance the design of low cost satellite communications systems using Internet Protocols (IP)
- **DEMO:** Extend the terrestrial IP network to space by using USN remote ground stations as access points for "mobile routers" on spacecraft
  - **Research available products, protocols, and standards**
  - **Develop an operations concept for IP spacecraft communications**
  - **Design a spacecraft communications sub-system**
  - **Design and install compatible ground-side equipment for the USN network**
  - **Demonstrate proposed IP spacecraft communications**

Demo Challenges / Breakthroughs

- Defining the TCP/IP RF layer implementation
  - Establish a baseline using existing methods and standards
  - Establish affordable hardware that enables this implementation and is compatible with the ground station equipment
    - Innoflight's Internet Protocol Satellite Access System (IPSAS)
- Enable Mobile IP – feature of standard routers (e.g., CISCO)
  - Spacecraft comm. system is the mobile router
  - Ground station is the Foreign Agent
  - Network Management Center (NMC) is the Home Agent
  - User's entry to the network is at the NMC
- Overcoming asynchronous links – some space links may be at higher rates than the ground WAN
  - Enable store and forward capability at the ground station for each communication session
- Security – extending industry standards to space
  - Firewalls, secure tunnels, and Internet Key Exchange used throughout
  - A "black" network -- Source Encryption (DoD or other) remains in tact
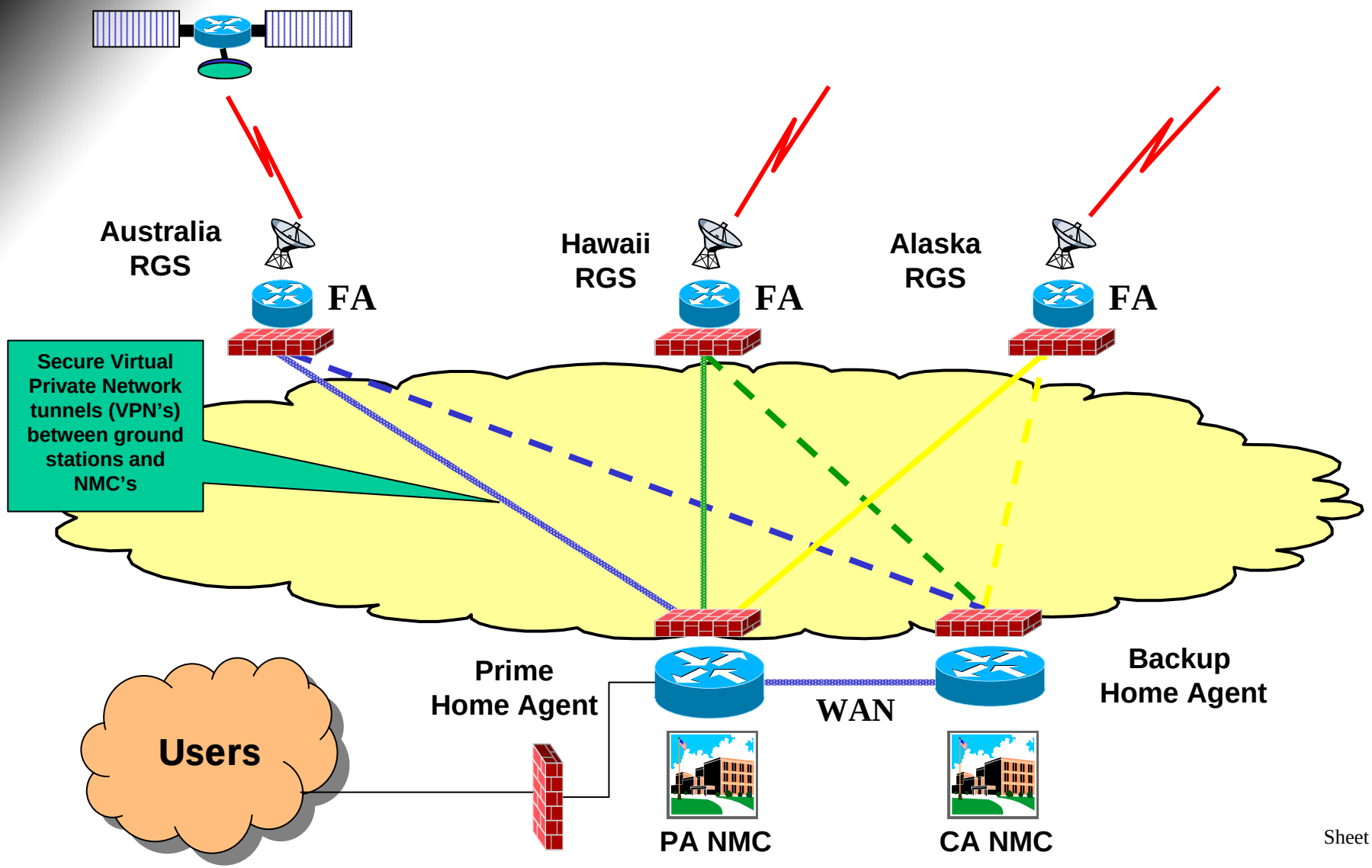
Planned Mobile IP Ground Network