UTIAS SFL Space Flight Laboratory

Building Canada's Future In Space

Overview of the CanX-2 Nanosatellite Propulsion System

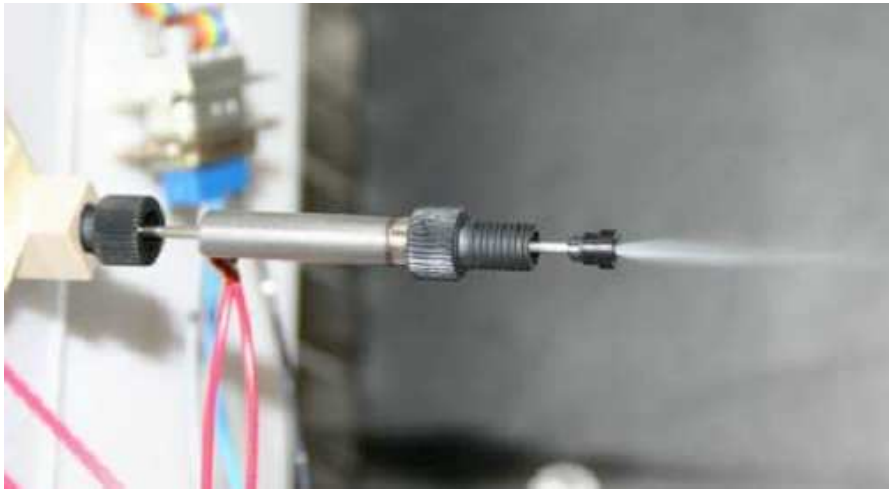

Presented by: Stephen Mauthe, MASc Candidate
University of Toronto Institute for Aerospace Studies
Space Flight Lab

August 10, 2005

Presentation Outline

- Introduction
  - CanX-4 and -5 Formation Flying
  - CanX-2
  - NANOsatellite Propulsion System (NANOPS)
- Design Methodology
- Design Overview
- Performance

CanX-4 & -5

- Canadian Advance Nanospace eXperiment (CanX) program at UTIAS/SFL
- Formation flying mission involving two nanosatellites
  - Viability of formation flying with nano-class (<10kg) satellites
- Innovations of this mission include:
  - Centimetre-level position determination and control
  - Compact nanosatellite propulsion system
  - Three-axis attitude control system

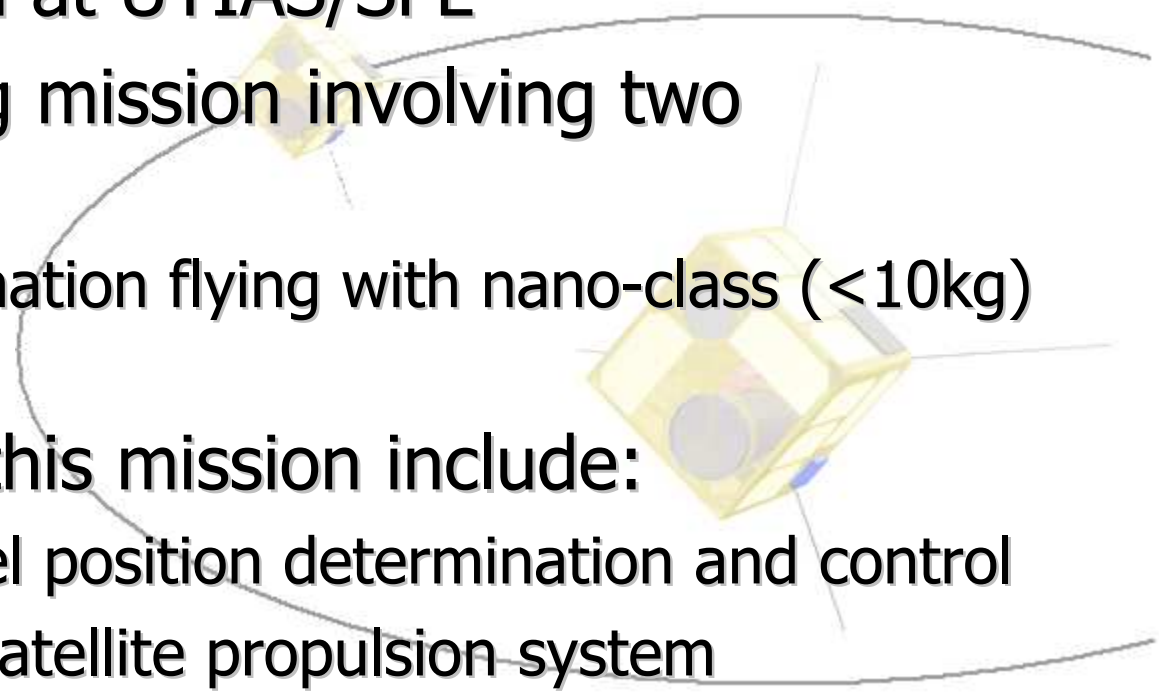

CanX-4/-5 Requirements

- Mission Performance Comparison

	Interefometry Mission		Earth Observation	Space Weather	Inspector Mission		Formation Flying
Parameter	LISA	ST3	EO-1	ION-F	Escort	Bandit	CanX-4/-5
ΔV	2 m/s	n/a	100 m/s	n/a	35 m/s	35 m/s available	100 m/s (TBC)
Specific Impulse	>500 s	>50 s	150-225 s	500 s	>120 s	65 s	50-100 s
Thrust	0.1 mN	4.5 mN	1000 mN	<0.112 mN	100 mN	55 mN	50-100 mN
Min. Impulse Bit	<0.001	n/a	n/a	0.056 mN·s	1.0 mN·s	0.55 mN·s	0.1 mN·s

CanX-2

- CanX-2 will be a precursor to CanX-4 and -5
  - Risk mitigation
  - Improve the reliability of the critical components

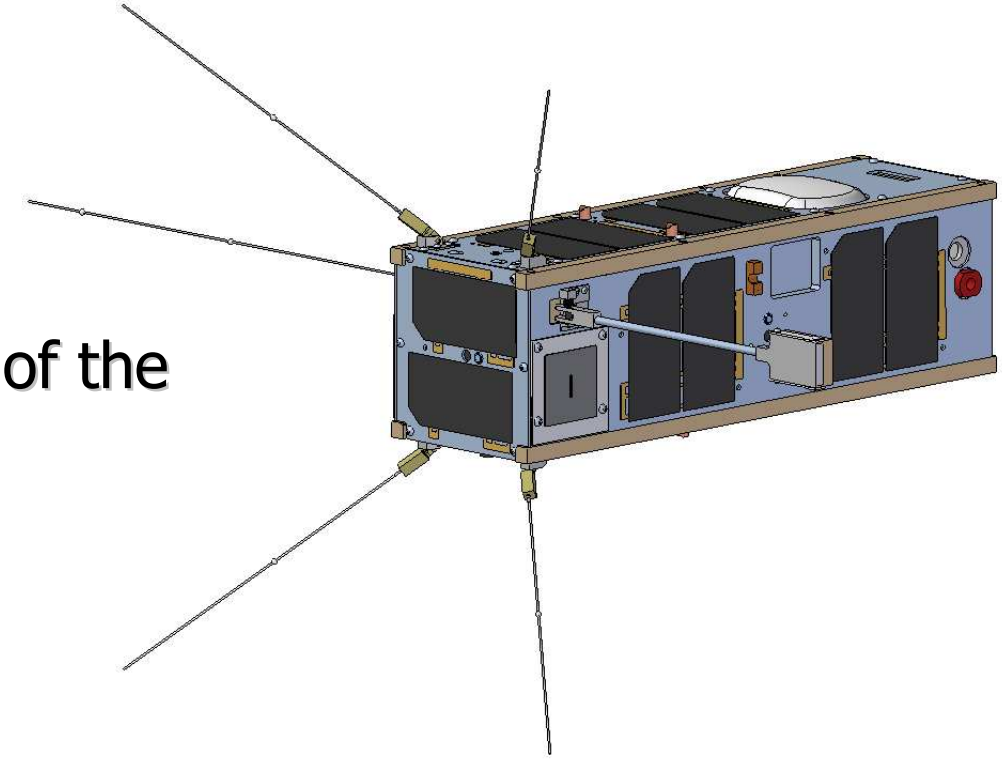

CanX-2

- The primary elements of the CanX-2 spacecraft
  - 10x10x34 cm CanX nanosatellite bus
    - On-board computer, communications, structure, thermal and power subsystems
  - GPS receiver
  - Attitude control system
    - Magnetometer, sun sensors, magnetorquers, and a nanosatellite reaction wheel
  - CMOS imaging system
  - Nano-propulsion system demonstrator

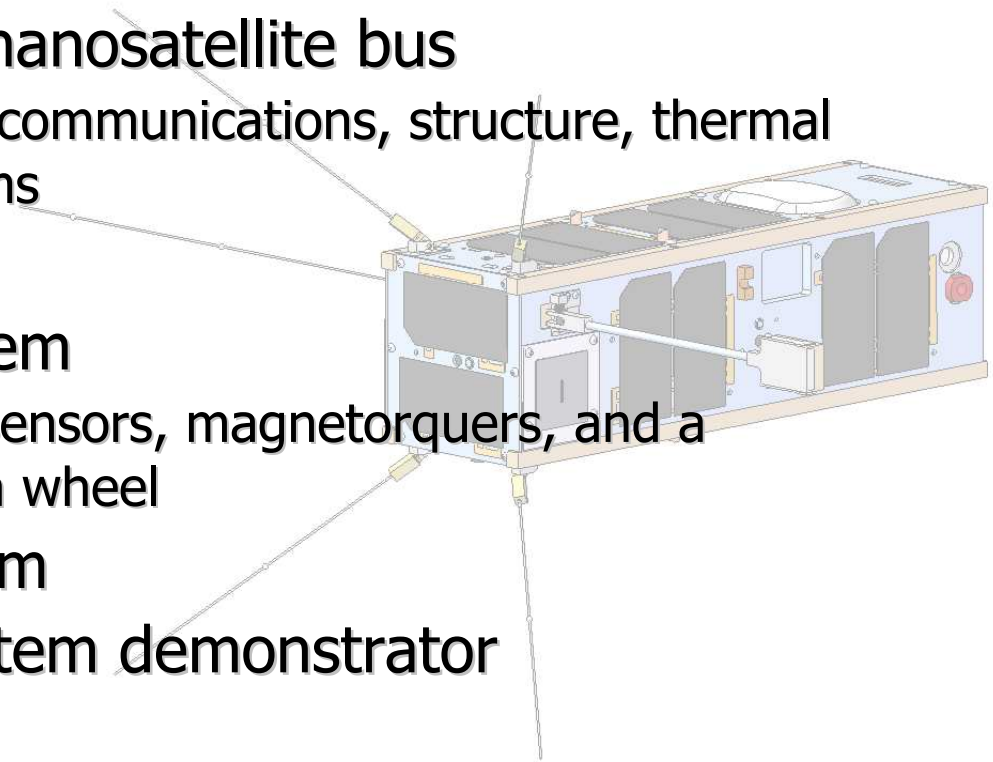

NANOPS on CanX-2

- Aims to prove
  - Enabling component technologies
  - General design methodology
  - Implementation strategy
- CanX-2 version of NANOPS is a scaled prototype for the CanX -4 and -5 mission
- CanX-2 target performance goals

ΔV	2 m/s
Thrust	50 mN
I_{sp}	45 s
I_{bit}	< 0.5 mNs

- NANOPS is a cold-gas propulsion system

NANOPS on CanX-2

- Performance measured through satellite rotation
- Scaled down from CanX-4/-5 requirements
  - Mass and volume constraints
    - CanX-4/-5: 5 kg 17 x 17 x 25 cm
    - CanX-2: 3.5 kg 10 x 10 x 34 cm
  - Schedule and budget constraints
- Necessary in order to meet CanX-2 requirements and development schedule

NANOPS on CanX-2

- Improvements to ΔV can be obtained through
  - Increasing the amount of stored propellant
  - Increasing I_{SP}
  - Use of lighter weight components to reduce spacecraft dry mass

NANOPS on CanX-2

– Comparison with available propulsion systems

Component	MiPS	SNAP-1	NANOPS
Propellant	Iso-Butane	Iso-Butane	Sulphur Hexafluoride
Propellant Mass	53 g	32.6 g	~15-18 g
Propellant Storage	95 cc tank	65 cc tank	10 cc tank
Tank Pressure	2.8 bar	4 bar	34.5 bar
Thrust	55 mN	45-120 mN	50 mN
Specific Impulse	65 s	>60 s	45 s
ΔV (4 kg satellite)	8.5 m/s	4.8 m/s	2 m/s

Design Methodology

- Propellant selection
  - Desirable propellant characteristics consist of:
    - High storage density (liquid storage)
    - Reasonable vapor pressure
    - Electrically non-conductive
    - Chemically inert : non-combustible, non-corrosive
    - Safe and non-toxic
    - Easily available

Design Methodology

– Several propellants were originally considered for use with NANOPS

Chemistry	Vapor Pressure (at 21°C)	Density of Liquid
Acetone C_3H_6O	0.3 bar (4.5 psi)	790 kg/m^3
Ammonia NH_3	8.8 bar (127psi)	682 kg/m^3
Carbon Dioxide CO_2	62.0 bar (900 psi)	763 kg/m^3
Isobutane C_4H_{10}	2.6 bar (38 psi)	556 kg/m^3
Nitrous Oxide N_2O	50.0 bar (725 psi)	1223 kg/m^3
R134a CH_2FCF_3	5.8 bar (84 psi)	1150 kg/m^3
Sulphur Hexafluoride SF_6	21.7 bar (315 psi)	1380 kg/m^3
Xenon Xe	53.5 bar (773 psi)	3057 kg/m^3

Design Methodology

- Sulphur Hexafluoride (SF_6) was chosen to be the propellant for NANOPS
- Pros
  - Relatively high liquid density
  - Vapour pressure high enough to ensure phase change
  - A known electrical insulator
  - Chemically inert and non-toxic
- Cons
  - Heavy molecule → lower I_{sp}

Design Methodology

- System Architecture
  - Limiting Factors
    - Envelope within CanX-2
    - How to connect various components
    - Magnetic Dipole
  - Volume Constraint
    - Difficulty finding miniature parts
    - Layout/Orientation of NANOPS components
  - Connections
    - Solenoid valves using 1/16" OD tubing
    - Servicing/removal of components after assembly
  - Magnetic Dipole
    - Minimize by valves treatment and orientation

Design Methodology

Final Design Specifications

Mass	555 g (dry)
Size	10 x 10 x 5 cm
Connection Types	PEEK & SS 316 Nut & Ferrule Unions
Tubing	1.59 mm (1/16") SS 316 & Tefzel
Major Components	Al 6061 System Tray 10 cc SS 316 Storage Tank Kapton Based Heaters (4) 34.5 bar (500 psi) Solenoid Valves (2) Conical Nozzle
Sensors	34.5 bar (500 psi) Pressure Sensor Temperature Sensors (4)

Design Methodology

NANOPS Schematic

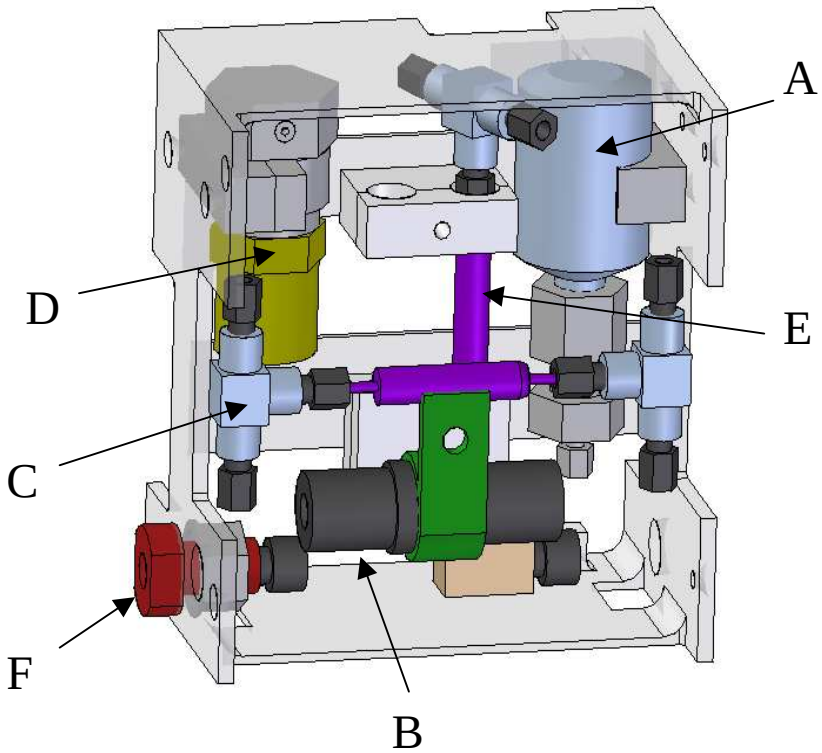

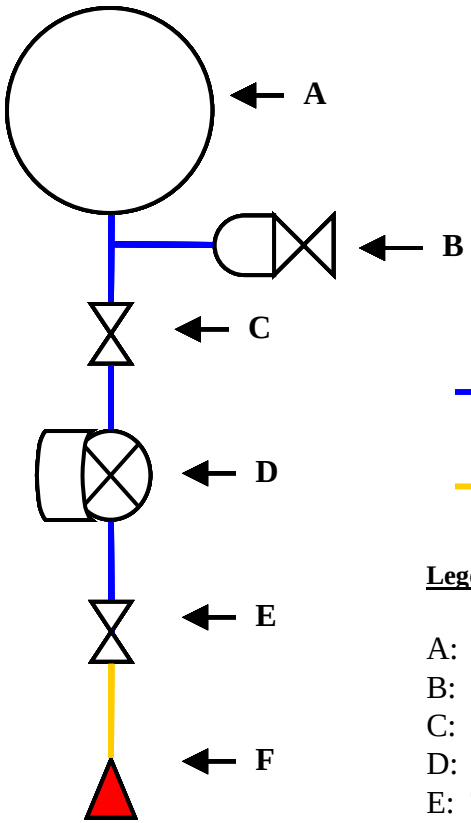

Stainless Steel Tubing

Tefzel Tubing

Legend

A: Storage Tank
B: Relief Valve
C: Regulator Valve
D: Pressure Sensor
E: Thruster Valve
F: Nozzle

NANOPS Parts

Solenoid Valve

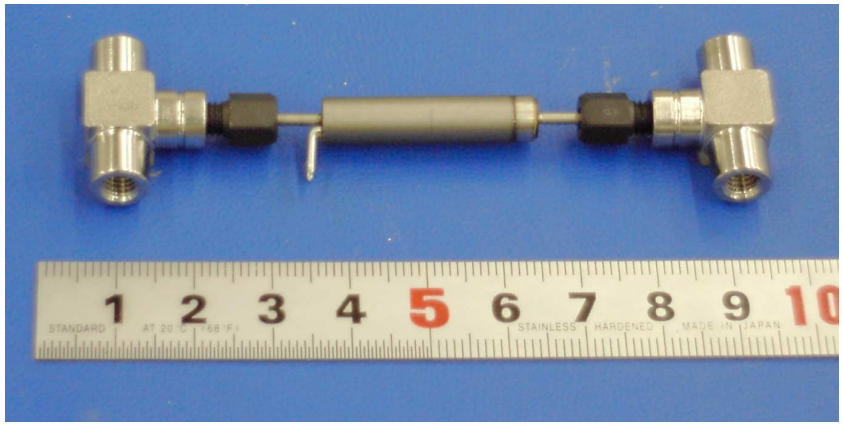

Storage Tank

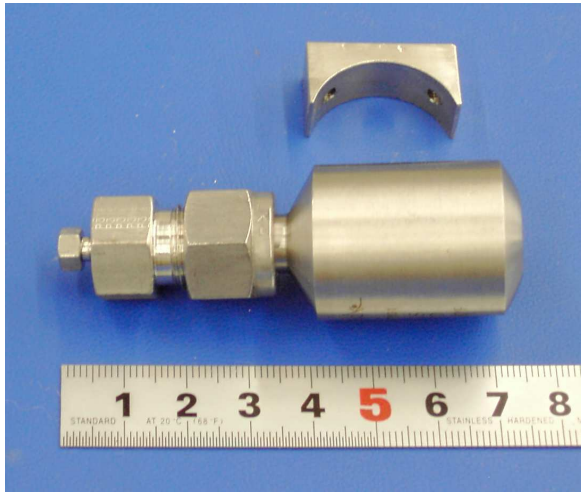

Vent Valve

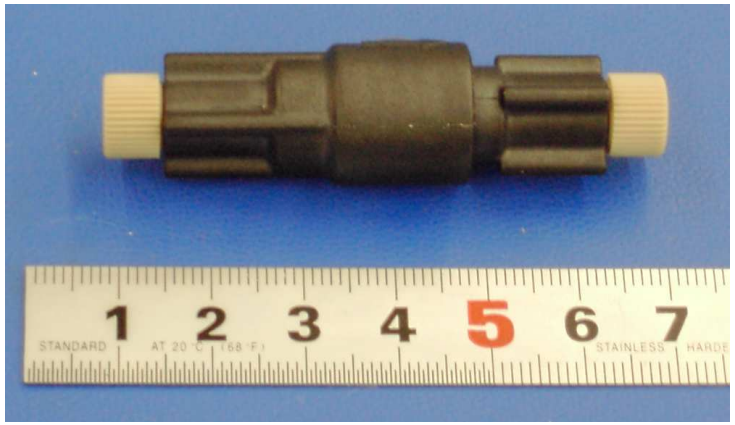

Pressure Sensor

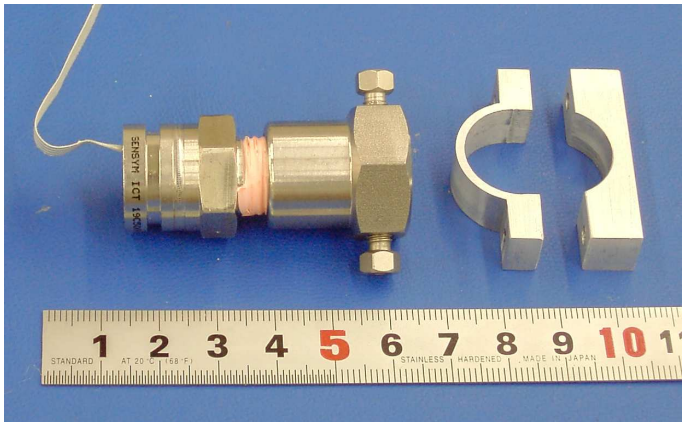

Design Methodology

Assembled NANOPS

(without wiring and some structural pieces)

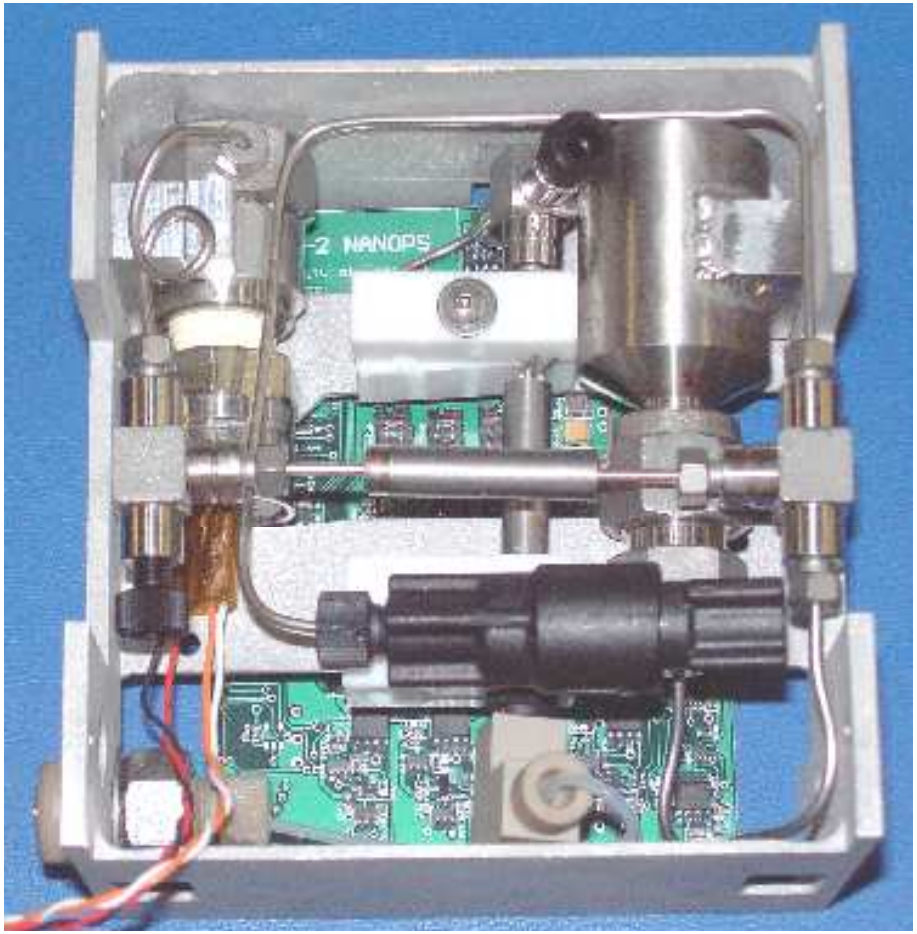

Performance

- Characteristics that determine system performance
  - Impulse/Thrust → 100 mNs / 50 mN
  - I_{sp} → 45 s
  - Fuel Cons. → >10 thrust tests /1000 mNs total impulse
- Microbalance used to measure thrust
  - Affordable alternative to commercial thrust stand
  - Resolution of 0.01 grams (0.1 mN)
  - Modification is necessary for operation in a vacuum
  - Operable temperature range is limited to 5°C to 40°C

Performance

- Testing conducted with unexpanded exhaust
  - PEEK tubing used at exit of system to maintain constant exit diameter (AR=1)
  - Data from these tests help with design decisions for nozzle

Performance

Impulse @ 25°C & ~1 atm, 2 sec thrust

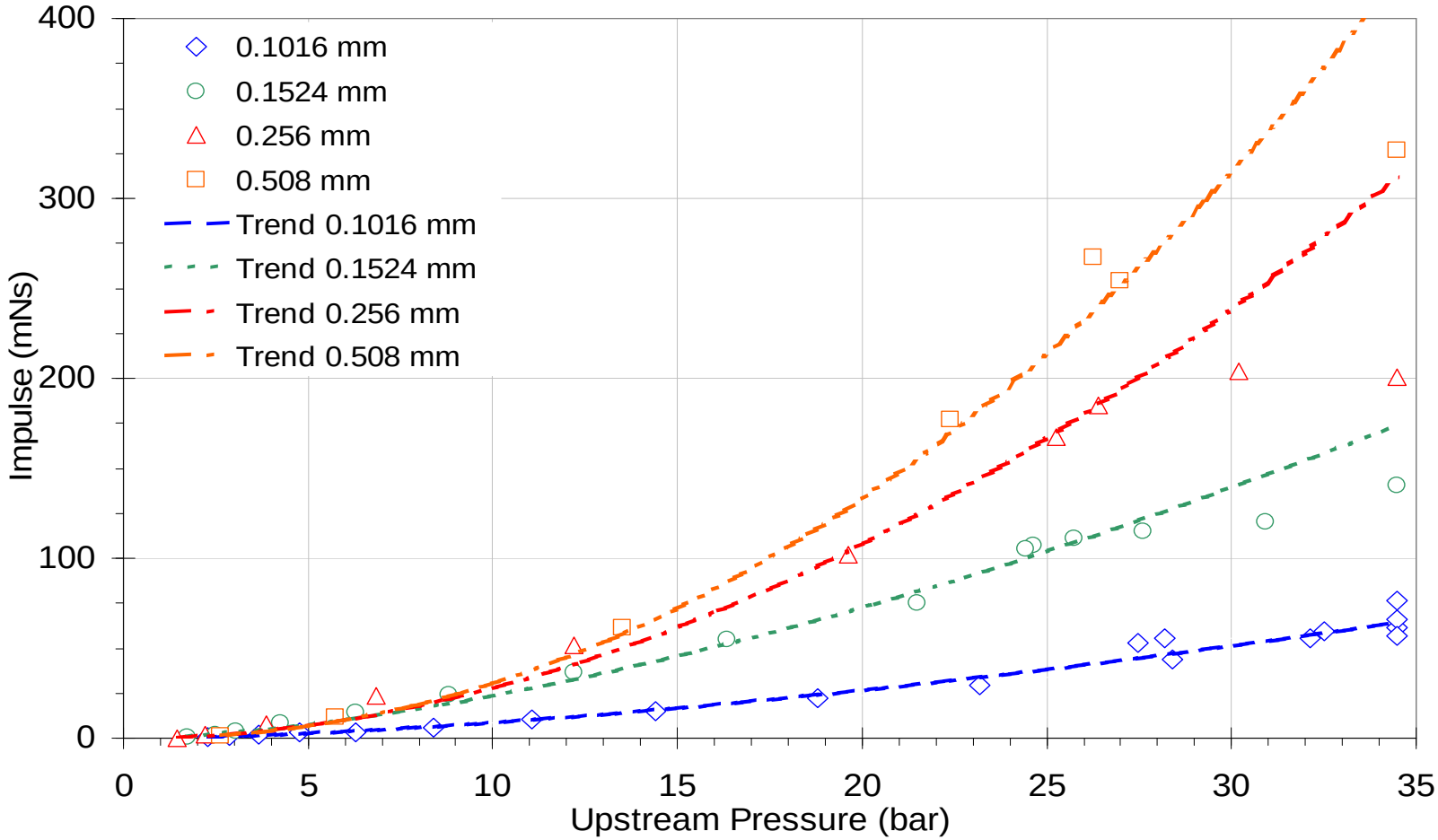

Performance

Specific Impulse @ 25°C & ~1 atm

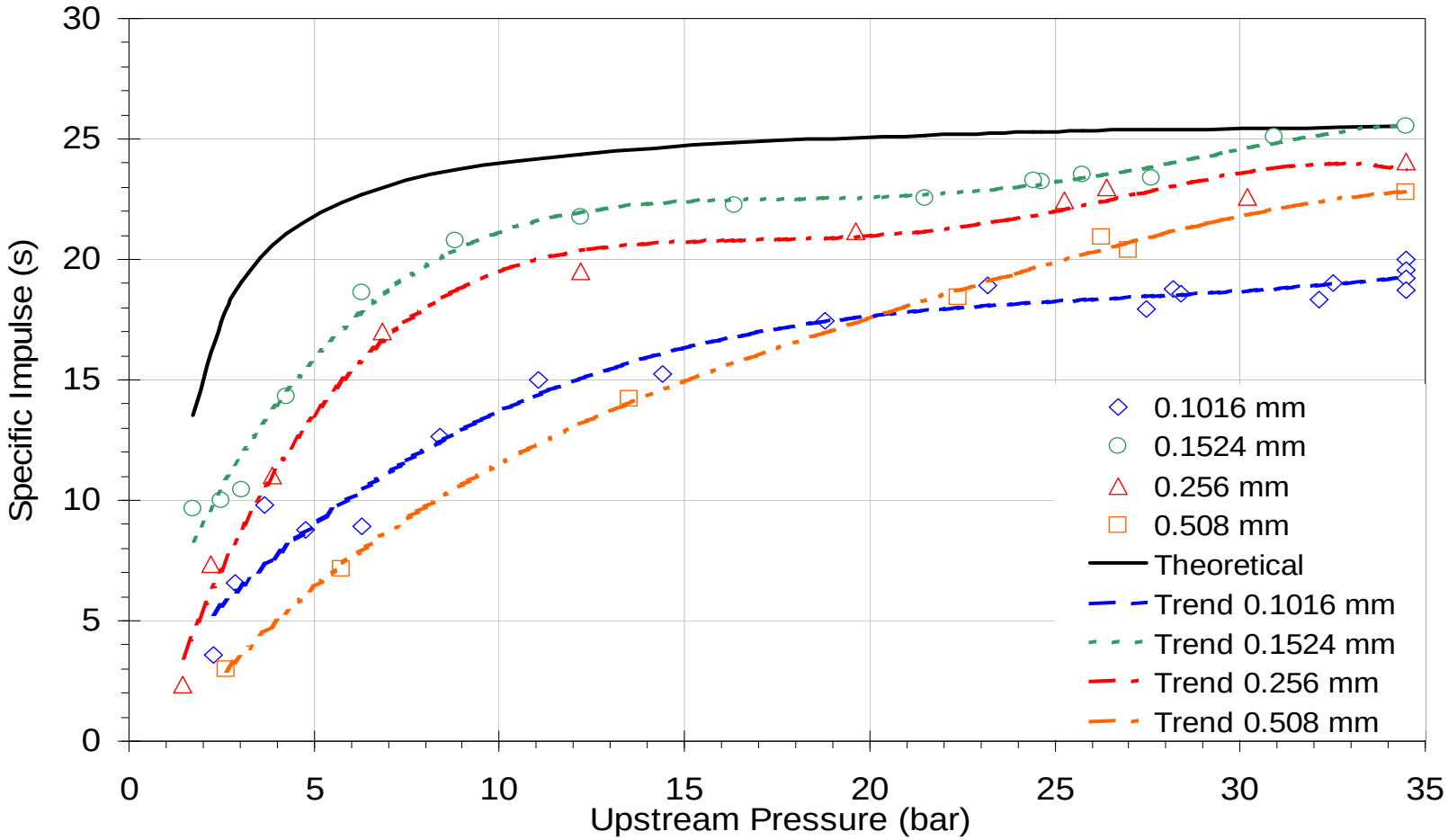

Performance

- Based off of 0.1016 mm (4 mil) tubing
  - I_{sp} is too low → 20 s at best
  - Impulse is ~1/2 of desired magnitude
  - Satisfactory number of tests
- Nozzle characteristics
  - Conical diverging section
  - Throat diameter ~0.1 mm
  - Expansion ratio of ~ 400
- Effects on performance
  - I_{sp} increase to ~45 s
  - Average thrust should double

Performance

– Testing with nozzle is currently underway, results are pending

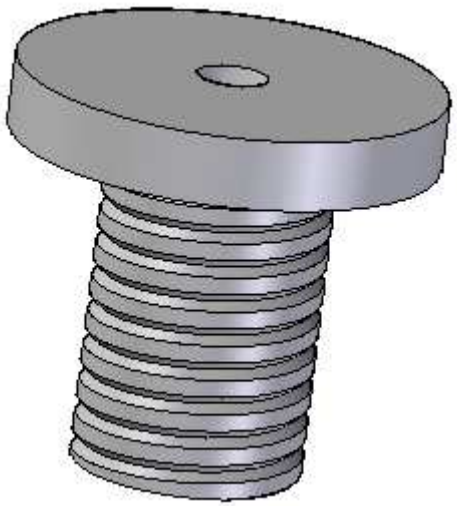

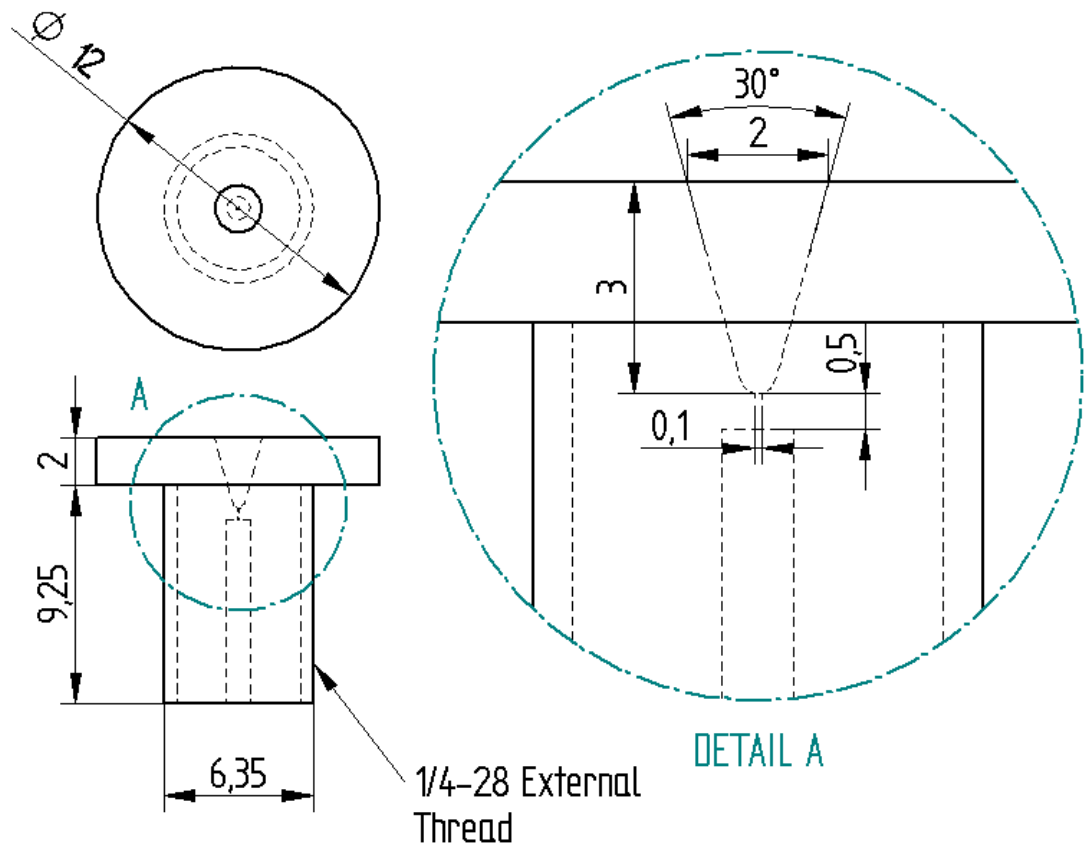

Any Questions?

Partners

Sponsors

www.utias-sfl.net