Designing for ESPA:
The Challenges of Designing a Spacecraft for a Launch Accommodation Still in Development

Jon Miller

17th Annual AIAA/USU Conference on Small Satellites
SSC03-II-7
August 12, 2003

ESPA Ring Features

- Bolts onto launch vehicle below primary payload adapter fairing.
- Encapsulated within the same fairing as the primary payload.
- Spacecraft are cantilever-mounted.

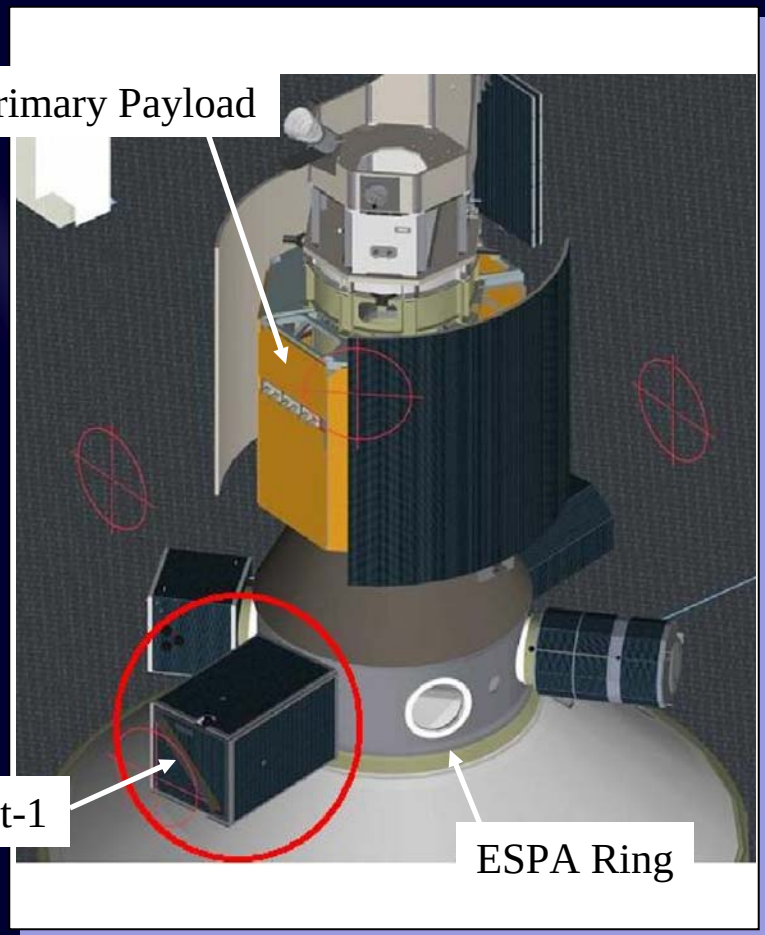

ESPA Ring Advantages

- Advantages:
  - Secondary payloads can eject before the primary payload.
  - Secondary payloads can be accessed after encapsulation via standard fairing access doors.
  - Generous mass-to-volume ratio
- Disadvantages:
  - Cantilevered launch position.
  - Separation system bolt circle diameter is only 15 inches.

Payload Requirements

Critical Dimension	Requirement
Width	24 in (60cm)
Height	24 in (60cm)
Length (from flange mount)	38 in (96 cm)
CG (from flange mount)	19 in (48 cm)
Sep. System Bolt Diameter	15 in (38 cm)
Mass	397 lb (180 kg)
1st Fundamental Frequency	35 Hz
Delta-IV Quasi-Static Load	18.75 g's (10.6g's in two axes simultaneously + 1.25 SF)

The Problem in a Nutshell

- Launch loads are not completely characterized
  - Inflated launch loads must be imposed to provide a level of comfort to the primary payload and the LV.
- Cantilevered orientation is requires non-traditional spacecraft structure design
- Traditional spacecraft construction methods and materials would not survive the anticipated loads.

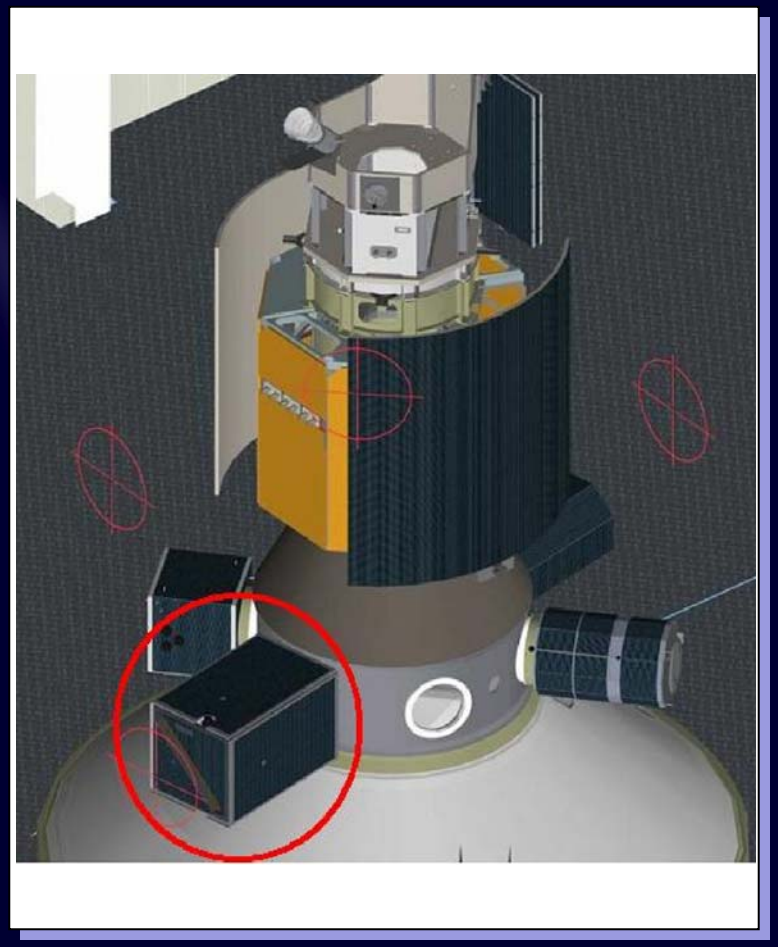

STPSat-1 Separation Interface Plate

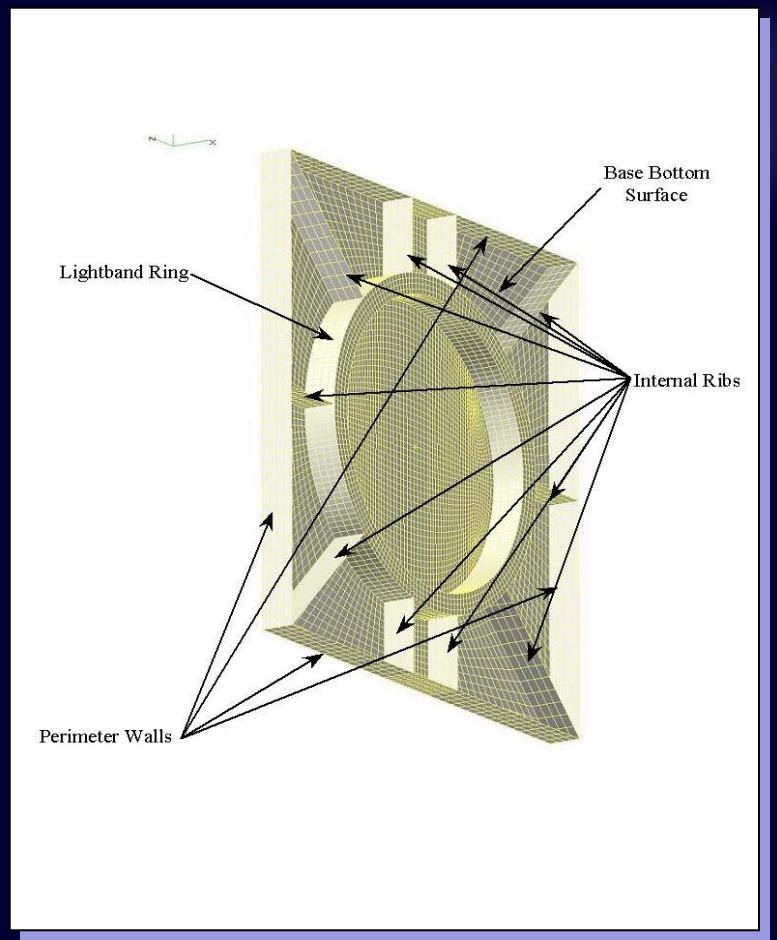

- Traditional honeycomb baseplate would delaminate under the loads.
- Material: 6061 Aluminum Plate
- Baseplate Features:
  - Solid 1” wide ring to be drilled and tapped for the separation ring.
  - 5mm wide internal ribs.
  - 3mm thick face sheets
- Hogged out of two solid plates and vacuum-brazed together
- Final Dimensions: 23”x 23”x 1”
- Mass: over 6 kg

STPSat-1 Avionics Assembly

- Three walls machined from 1” thick aluminum plate.
  - Extend 9” from the baseplate
  - Assembled I-beam cross section
- Heavy avionics components mounted directly to the baseplate
- Major components clamped in place with wedgelock retainers.
  - Easy access.
  - Simplify troubleshooting.

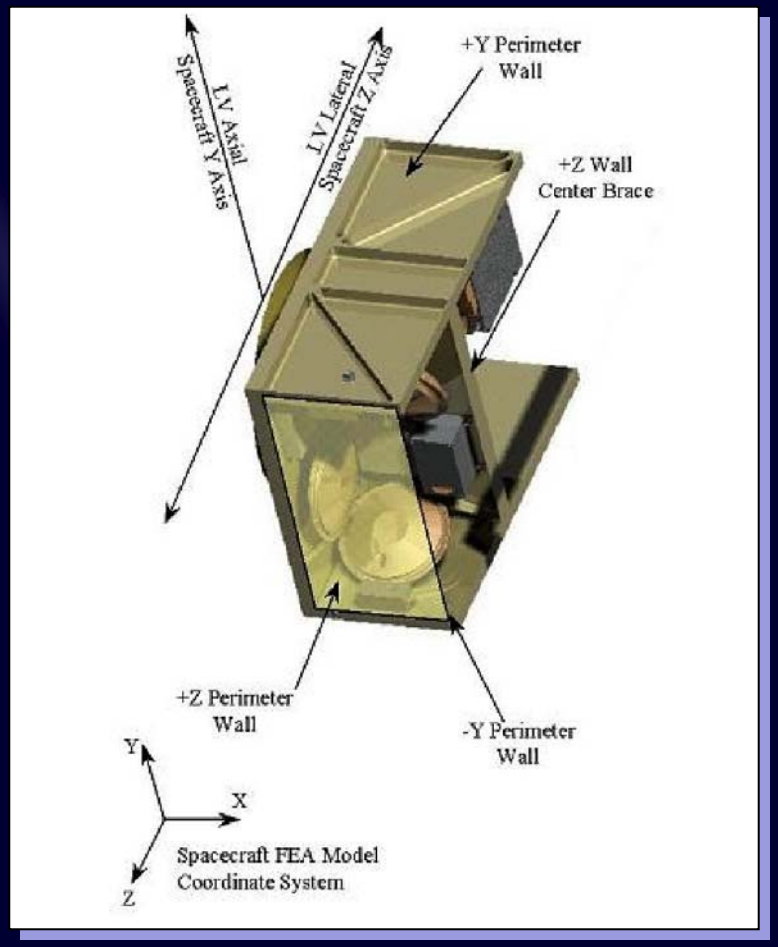

STPSat-1 Payload Assembly

- Built using SpaceFrame tube-and-fitting spacecraft architecture on a solid machined base.
- Provides additional stiffness to the avionics structure
- Each tube/fitting joint bolted and bonded to support the 18.75 g load

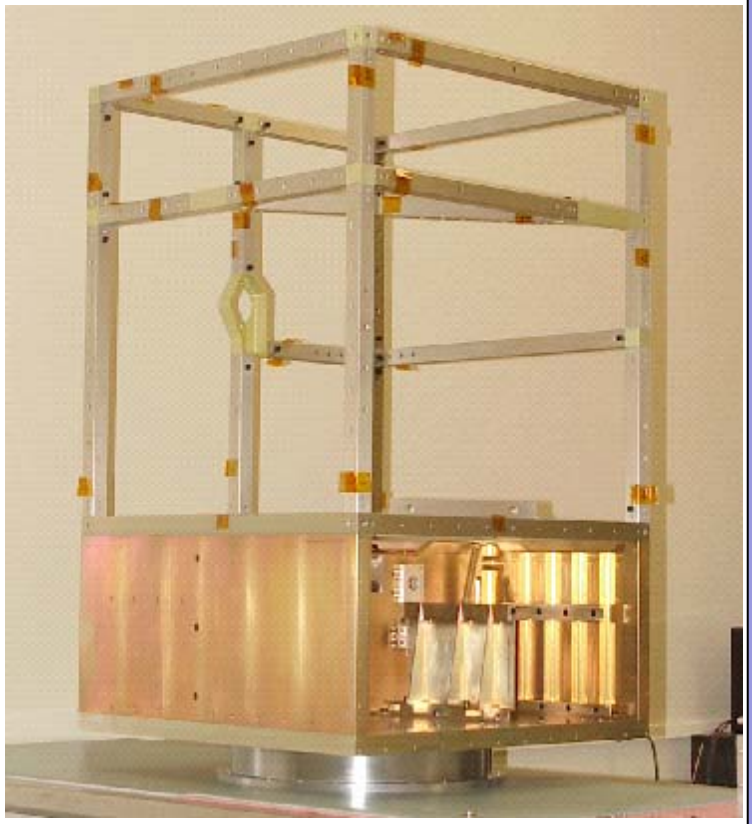

Finished STPSat-1 EDU Structure

Lessons Learned

- Back-to-basics approach to spacecraft structure design.
  - No exotic composites as structural components
  - No revolutionary bonding or machining techniques
  - Use of well-documented and well-understood engineering methods.
- Remember that a cantilevered orientation is typical for other types of high-performance vehicles, such as aircraft.
- High launch loads (18.75 g's) must be designed to in order to provide a level of comfort to the primary payload and the launch vehicle.
- The ESPA ring represents the most significant addition to the secondary launch capacity: It is worth designing to.

Acknowledgements

- Department of Defense (DoD) Space Test Program (STP)
- Air Force Research Laboratory (ARFL) Space Vehicles Directorate
- CSA Engineering
- Boeing