U.R.C.O. Grant Proposal
October 15, 2014

Cathodoluminescence Events Coincident with Muon Detection

Kenneth Zia, Principle Investigator

JR Dennison, Faculty Mentor

Materials Physics Group
Physics Department
Utah State University

Abstract

Samples of highly disordered insulating material have been irradiated with keV electron beams, resulting in three forms of electron induced light emission with differing duration: arcs (<1 s duration), "flares" (~100 s), and cathodoluminescence (as long as beam is on) [Dennison, 2013]. The arc and cathodoluminescence phenomena are well understood, while the flares' origins are not. Flares were observed at intervals of ~2 per hr. This is within a factor of 2 for the expected muon cross section at an altitude of Logan, UT (1370 m) caused by high altitude cosmic rays; those high energy particles could have deposited sufficient energy throughout to discharge the insulators. Based on this suggestive evidence, we have proposed incorporation of standard muon coincidence detection apparatus into our vacuum cathode luminescence test facility. Measurements of the muon cross-section zenith angle and angle-dependence will provide calibration of the muon detector. If muon evidence coincides with the flare events, this will provide definitive evidence of the flare origin. We will discover whether a correlation between flares of charged sample is caused by transitory muons which trigger discharge and subsequent recharging during our testing of space materials [Zia, 2014b].

Introduction

The Material Physics Group specializes in creating space-like conditions; so they have a low temperature, low pressure, and high electron flux chamber that tests properties of materials (often insulators) [Dekany, 2012; Dekany, 2014a]. This lead to studies of electron-induced light emission of materials used in the construction of space-based observatories under simulated space environment conditions [Dennison, 2013; Anderson, 2014; Dekany, 2014b]. This self-emission of light was observed as three separate phenomenon: a glow that is sustained as long as the electron beam is on (termed cathodoluminescence), short duration arcing (<1 s) from electrostatic discharge, and intermittent emission of flares (duration ~10-100 s) [Dennison, 2013]. The electron current and light emissions signatures of the three types of emission are illustrated in Fig. 1.

Of the three aforementioned signitures cathodoluminescence and arcs are well explained phenomena; however the flares are infrequent in appearance in past group experiments (~2 flares/hr) [Dennison, 2013; Dekany, 2014b]. Flares infrequency and sudden onset with a rise time similar to a flare with the exception that while the arc shows a sharp loss of current through the sample the flare has a large increase (meaning that more electrons are able to penetrate through the material during that time inferring an addition of energy to the sample greater than the energy supplied by the electron beam). This began the group's interest in determining a cause of the flares.

Initial calculations of muon rates' dependence on altitude found to be within a factor of two compared to the observed rates of flares (~2 flares/hr) [Dennison, 2013; Circella 1993; Ramesh, 2011]. Transit of high energy muons across a charged insulator could deposit sufficient energy to enhance conduction trough radiation induced conductivity [Gillespie, 2014] which could lead to discharge and enhanced light emission [Anderson, 2014] (much as happens for photoavalanche diodes). Finding a possible connection between muons and flares would allow for explanation of an otherwise unknown occurrence in cathodoluminescence experiments.

Initial Work

The Fall semester of 2014 is being spent in the construction and calibration of a cosmic ray detector, with funding from competitively awarded SDL Undergraduate Research Equipment award [Zia, 2014a]. The basic design of the muon detector uses two scintillator detectors connected to coincidence detection electronics (see Fig. 2). This allows direct measurement of the high energy particles' flux separately in each detector and also determines the particle trajectory by selecting coincident signals from muons that pass through both detectors. The scintillators are currently being assembled from commercial kits

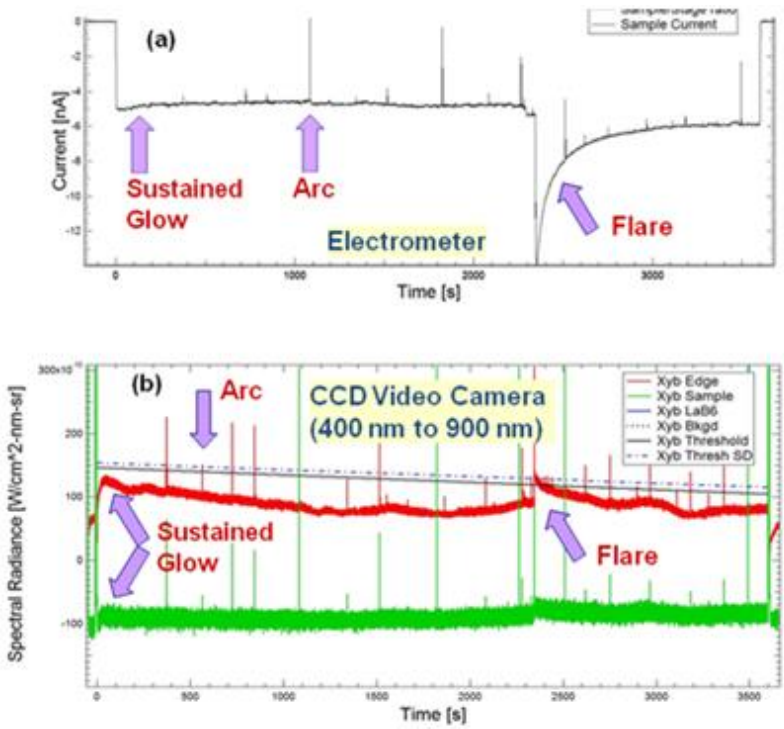

Fig. 1 (a) Current through sample vs. time showing the three types of emission. (b) Optical intensity vs. time showing the three types of emissions. After [Dennison, 2013].

(Hamamatsu R6233 scintillator detectors). The detection electronics and computer are existing equipment from the USU Material Physics Group. A data acquisition card (DAQ Card Reader DC-203) was purchased to acquire the raw data and timing signals. PMTs will be calibrated for scintillating wavelengths when excited. Initial calibrations of the scintillating paddles are necessary to determine the detection efficiency of the two paddles by comparison with the predicted muon cross section. Counts are expected on the range of ~2 per minute at an altitude of Logan, UT (1370 m) [Ramesh, 2011].

Proposed Research

We propose that energy deposited by high energy cosmic rays can trigger the observed flare optical emissions. If true, this will have critical consequences for space-based astronomical observations, as a ubiquitous source of contaminating stray light for the optical elements [Ferguson, 2014; Dennison, 2013].

This proposal requests funds to use the custom built scintillating detectors system (completed in Fall 2014) to determine coincidence between flares and muons. We will make measurements of the muon cross section zenith angle and angular dependence to calibrate the muon detector in coincidence mode [Drake, 2012; Dmitri, 2000]. To obtain the coincidence results, the apparatus is mounted and connected with a discriminating unit to allow for determination of coincidence [Zia, 2014b]. With these measured, the efficiency of the detectors can be determined at a set distance at a specific angle to determine the probability of a muon striking the sample also going through both detectors [Univ. of Adlaide, 2005]. Because of the small size of the discharge samples, muons are expected to pass through the samples at a rate of ~2 per hour, which is comparable to the measured rate of flares [Gaisser, 2001; Landecker, 1978]. Mounting of the scintillators will be a tight fit, but once held in position we continue to the next phase. The two sets of apparatus, the detector and the spacecraft charging experimentation, will work together in parallel with each other, allowing the critical test for coincidence to proceed. Once the muon detectors

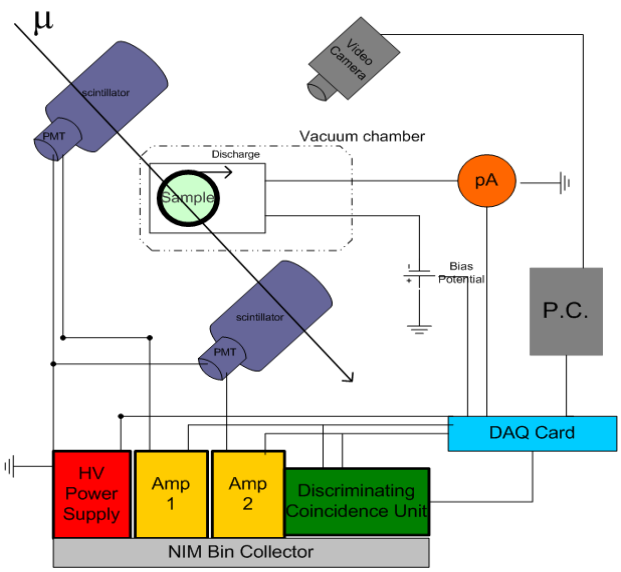

Fig. 2 Coincidence experiment schematic.

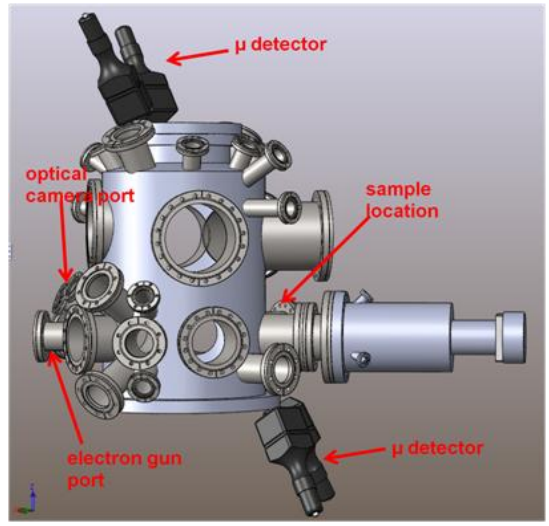

Fig. 3 Vacuum chamber with scintillating detectors arranged around the sample.

are operational and calibrated in coincidence mode, they will be placed around the sample position of the Electron Emission Test chamber (EET chamber) (See Fig. 3). To confirm that muons are the trigger for flares, coincident muon detection in both scintillators, situated on either side of the EET chamber, must occur simultaneously with the observation of a flare with the EET's video cameras. With this process we hope to establish coincidence to better understand flares.

Presentation of Results

Various presentations on electron-induced optical emission have been made by fellow group members [Dennison, 2013; Jensen, 2013; Christensen, 2013]. The first opportunity for me was at the American Physical Society Four Corners Regional Meeting in Orem, Utah on Oct. 17-18th 2014 [Zia, 2014a]. The audience for this meeting was at a professional level, where I could focus on the physical insights gained in the area of this research. Experts in both material science and cosmic ray detection will present. The USU Student Showcase in April will be where I first present a summary of coincidence tests and what steps could be taken next based on the initial results. The audience at the student showcase presents a different challenge of molding my analysis and presentation to a broader audience that might need more background. I also proposed to make a presentation at the SPIE cryogenic Optical Systems and Instrumentation Conference. This conference is attended by scientist and engineers that develop low temperature space-based observatories where light pollution from flares can have significant potential impact.

Personnel Overview

Kenneth Zia is a senior undergraduate student majoring in Physics at Utah State University. Kenneth transferred from the University of Arizona where he had most of his research experience in scanning spectroscopy and cosmic ray detection. He joined the Material Physics Group Fall 2014, and has been learning about cathodoluminescence to better comprehend the possible correlation between cosmic rays and flares. In the future, Kenneth, is interested in continuing research with the Material Physics Group in their spacecraft charging experimentation and learning all that he can about solid state physics.

URCO Project Time Line

Objective	Completion
APS Four Corners Regional Meeting	Oct. 2014
Scintillating detectors assembled and PMT's calibrated	Dec. 2014
Calibrate scintillating detectors	Jan. 2015
Optimize coincidence and mount detectors around vacuum chamber	Feb. 2015
Experiment ready for determining coincidence	March 2015
Experimental determination of muon and flare coincidence	April 2015
Present summary of compiled work at USU Student Showcase (Logan, UT)	April 2015
Presentation of flare origins research SPIE Optics and Photonics Conference (San Diego, CA)	Aug. 2015

J. R. Dennison is a professor in the Physics Department at Utah State University, where he leads the Materials Physics Group. He has worked in the area of electron scattering for his entire career and has focused on the electron transport and electron emission of materials related to spacecraft charging for the last two decades. He will provide project oversight and will work directly with me on experimental design, analysis methods, and interpretation of the data.

Funding

The table below lists the proposed budget for this project. The majority of the funds are for labor for the PI, calculated at 10 hr/week for 14 weeks in the spring semester 2015. Much of the specific equipment for the project was purchased with funds from an SDL Undergraduate Research Equipment Funds competitive award through the Physics Department [Zia, 2014a]. Additional instrumentation and the use of the Electron Emission Test chamber are provided through the USU Materials Physics Group. Funds for test materials for the flare/muon coincidence tests are included in the URCO budget, as are supplies to complete the muon coincidence test system for these measurements. Matching funds comes from the USU Materials Physics Group from account A07563.

URCO BUDGET SUMMARY		
EXPENSES:	**VENDOR**	**AMOUNT:**
Materials		
Polymeric and composite samples	Goodfellow Metals	$250
Supplies		
Coincidence mounting fixture	SDL Machine Shop	$200
Coincidence electronics and cables	Digikey Electronics	$150
Salary		
Kenneth Zia @ $10/hr	140 hr	$1400
TOTAL BUDGET:		$ 2000
VP for Research URCO Funds		$1250
Materials Physics Group Matching Funds (A07563)		$750
TOTAL FUNDING SOURCES		$2000

References

A. Andersen, JR Dennison, A. M. Sim and C. Sim, "Electrostatic Discharge and Endurance Time Measurements of Spacecraft Materials: A Defect-Driven Dynamic Model," Abstract 127, *Proceedings of the* 13th *Spacecraft Charging Technology Conference,* (Pasadena, CA, June 25-29, 2014), 11 pp..

J. Corbridge Gillespie, JR Dennison and A. M. Sim, "Density of State Models and Temperature Dependence of Radiation Induced Conductivity," Abstract 113, *Proceedings of the* 13th *Spacecraft Charging Technology Conference,* (Pasadena, CA, June 25-29, 2014), 8 pp.

M. Circella. "Cosmic Ray Muon Spectrum in the Atmosphere" 23rd International Cosmic Ray Conference, Vol. 4, July 19-30, 1993

"Cosmic Ray Muon Detector" http://hermes.physics.adelaide.edu.au/astrophysics/muon/. (University of Adlaide 2005).

J. Dekany, R.H. Johnson, G. Wilson, A. Evans and J.R. Dennison, "Ultrahigh Vacuum Cryostat System for Extended Low Temperature Space Environment Testing," *Proc.* 12*th Spacecraft Charging Techn. Conf.*, (Kitakyushu, Japan, May, 2012).

J. Dekany, R. H. Johnson, G. Wilson, A. E. and JR Dennison, "Ultrahigh Vacuum Cryostat System for Extended Low Temperature Space Environment Testing," *IEEE Trans. on Plasma Sci.*, **42**(1), 2014a, 266-271.

J. Dekany, J. Christensen, JR Dennison, A. E. Jensen, G. Wilson, T. Schneider, C.s W. Bowers and R. Meloy, "Variations in Cathodoluminescent Intensity of Spacecraft Materials Exposed to Energetic Electron Bombardment," Abstract 179, *Proceedings of the* 13th *Spacecraft Charging Technology Conference,* (Pasadena, CA, June 25-29, 2014b), 7 pp.

J.R. Dennison, J. Dekany, J.C. Gillespie, P. Lundgreen, A. Anderson, A.E. Jensen, G. Wilson, A.M. Sim, and R. Hoffmann, "Synergistic Models of Electron Emission and Transport Measurements of Disordered SiO_2," *Proc.* 13th *Spacecraft Charging Techn. Conf.*, (Pasadena, CA, June, 2014).

J.R. Dennison, A.E. Jensen, J. Dekany, G. Wilson, C.W. Bowers and R. Meloy, "Diverse Electron-induced Optical Emissions from Space Observatory Materials at Low Temperatures," *Proc. SPIE Cryogenic Optical Systems and Instr. Conf.*, Vol. 8863, 2013, pp. 88630B1-88630B15.

D. Denisov, "Detection of Muons," Fermilab: Academic Lecture, (April 5, 2000).

Drake. "Chasing a Cosmic Engine," Science News, July 14, 2012.

D.C. Ferguson, J.-M. Krezan, D.A. Barton, J.R. Dennison, and S. Gregory, "On the Feasibility of Detecting Spacecraft Charging and Arcing by Remote Sensing," *J. Spacecraft and Rockets*, 2014, in press.

T. K. Gaisser, "23. Cosmic Rays," http://pdg.lbl.gov/2002/cosmicrayrpp.pdf, (University of Deleware March 2002).

A.E. Jensen, J.R. Dennison, G. Wilson, J. Dekany, C.W. Bowers, R. Meloy and J.B. Heaney, "Properties of Cathodoluminescence for Cryogenic Applications of SiO_2-based Space Observatory Optics and Coatings," *Proc. SPIE Cryogenic Optical Systems and Instr. Conf.*, Vol. 8863, 2013, pp. 88630A1-88630A10.

P. B. Landecker "Cosmic-ray muon fluxes deep underground: Intensity vs. depth, and the neutrino-induced component," Phys. Rev .D,18,7 (1978).

J. Christensen, J. Dekany, and J.R. Dennison, "Stochastic Variations of Cathodoluminescent Intensity of Bisphenol/Amine Epoxy Exposed to Energetic Electron Bombardment," Utah State University Student Showcase, Logan, UT, April, 2014.

N. Ramesh. "Flux Variation of Cosmic Muons" Journal of the Arkansas Academy of Science, Vol. 65, 2011.

K. Zia with JR Dennison, "Cathodoluminescence Events Coincident with Muon Detection," SDL Undergraduate Research Equipment Funds, ($700, September 2014a to June 2015).

K. Zia, J. Dekany and JR Dennison, "Cathodoluminescence Events Coincident with Muon Detection," *American Physical Society Four Corner Section Meeting,* Utah Valley University, Orem, UT, October 17-18, 2014b.