Cellular-Satellite, a Different Kind of Final Frontier

James Lyke
Air Force Research Laboratory, Space Vehicles Directorate
AFRL/RVSE; (505) 846-5812
James.Lyke@kirtland.af.mil

Robert Pugh
Think Strategically!
PO Box 14951, Albuquerque NM 87191; (505) 331-1189
Bob.Pugh@Think-Strategically.com

Introduction

- Explore the notion of “cellularity” as a motif for the creation of complex systems
- Embraces and extends concepts of plug-and-play, modularity, reconfigurability

Unobtainium

- This talk is about unobtainium
- Everything at one point was unobtainium
- Process of discovery: frustration
  - *Many of our most-prized innovations have emerged as responses to frustrations encountered in our research and experimentation efforts*
  - Example: plug-and-play

Background-Prior Developments Influencing CellSat Concept

- Molecular electronics
- Advanced packaging / MEMS / miniaturization
- Molecular electronics
- Multifunctional structures
- Reconfigurable systems
- Molecular electronics
- Plug-and-play

Nature’s self-assembly

Before RNA-trigger

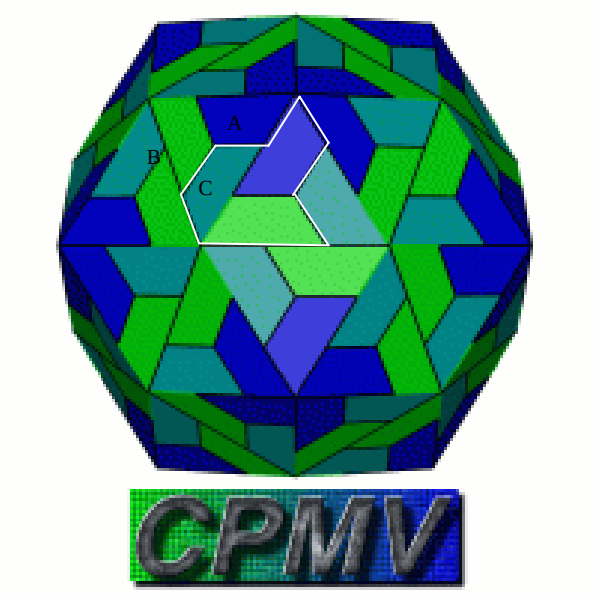

Spontaneous Assembly
After Trigger

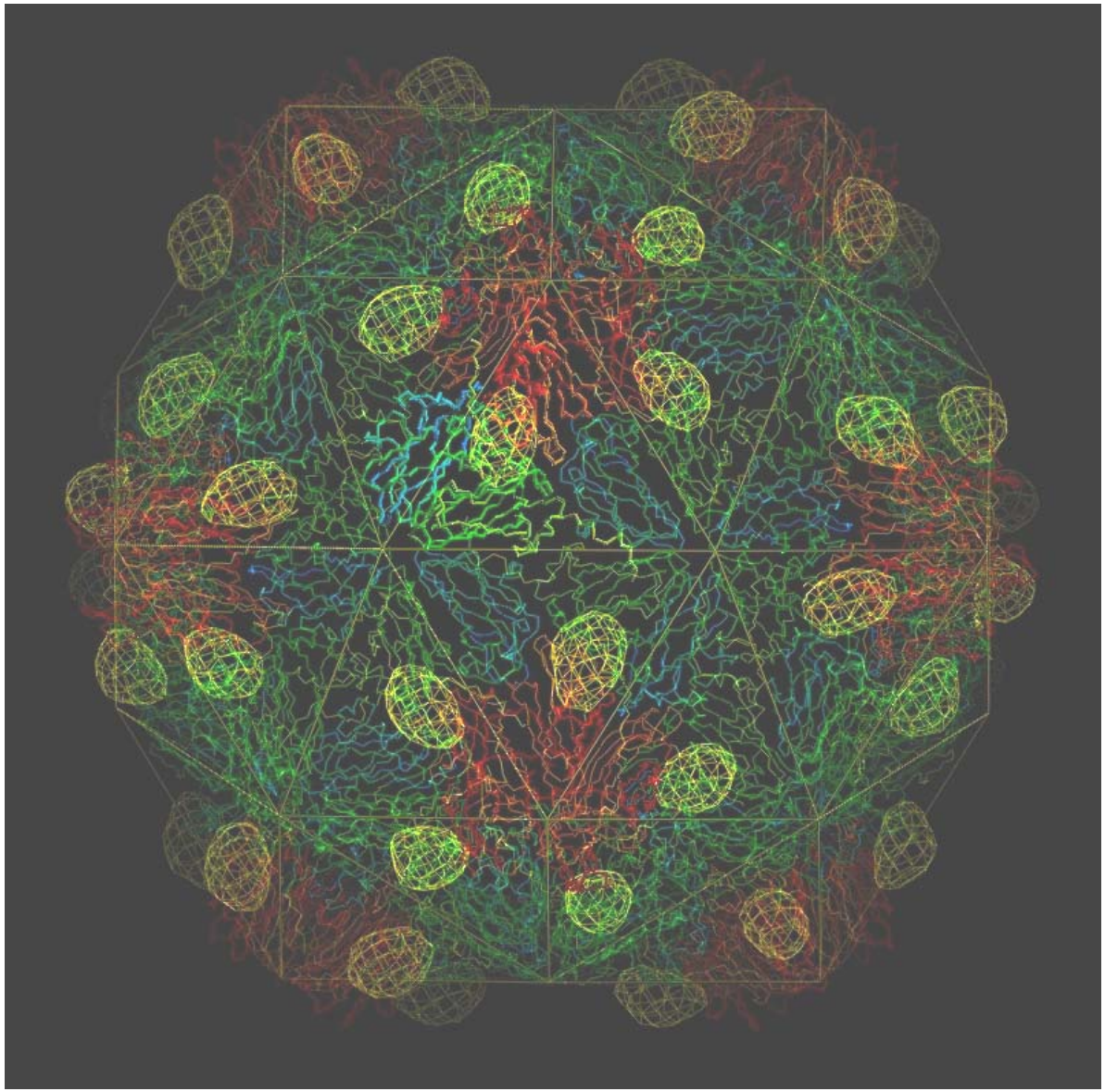

- What can we learn from nature about self-assembly?

Can we create a self-organizing spacecraft based on cellular elements?

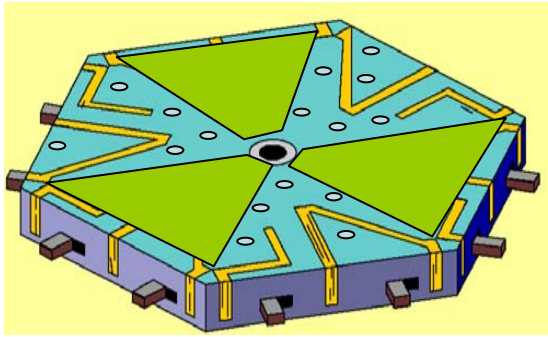

Protosat

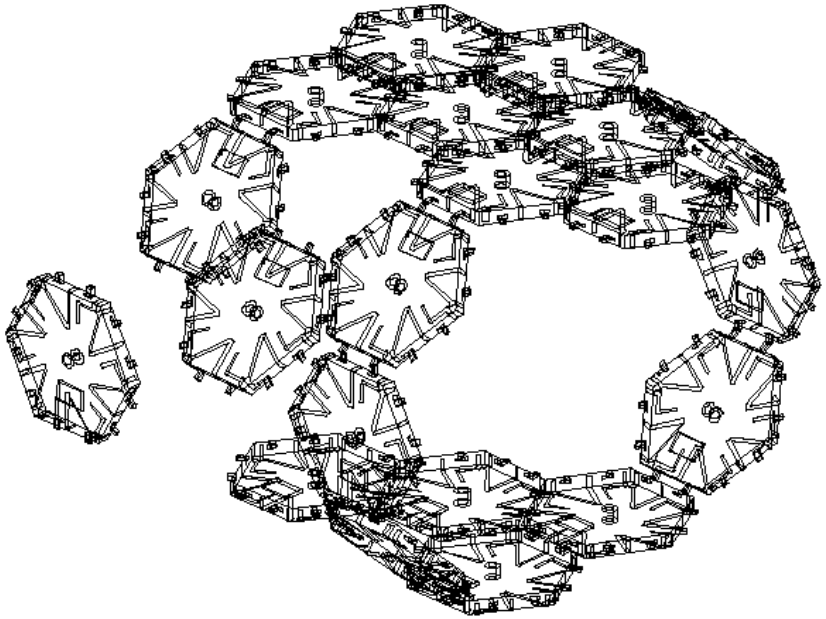

Macrosat

Why would we want to?

- Flexibility – The ability to repurpose systems flexibly in the field
- Robustness / resilience – The ability to recover from defects, faults, damage
- Speed in the construction of systems – nearly instant systems

Key ideas

- Cellularity / Atomicity
- Intelligent Configuration Management Framework
- Recursive Reconfigurability
- A new Moore’s Law

Cellularity / Atomicity

- The idea of "effective" indivisibility in objects of hardware, software, concepts
- Common examples
  - "actual" atoms (i.e., from periodic table)
  - linguistic atoms (letters, words, etc.)
  - logic (transistors, gates, etc.)
- More abstractly
  - Black boxes (as in encapsulated form of hardware and software)
  - Concept of "no user-serviceable parts" within (Vernor Vinge, *Rainbow's End*)

AFRL's "Guided Self-Assembly"

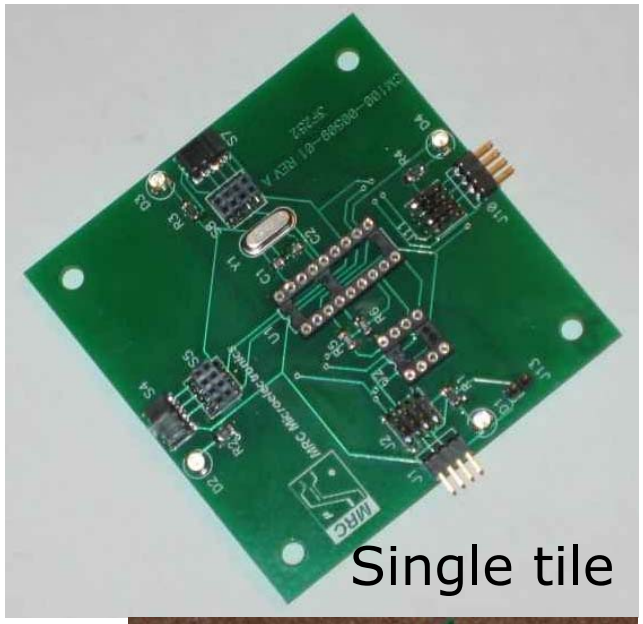

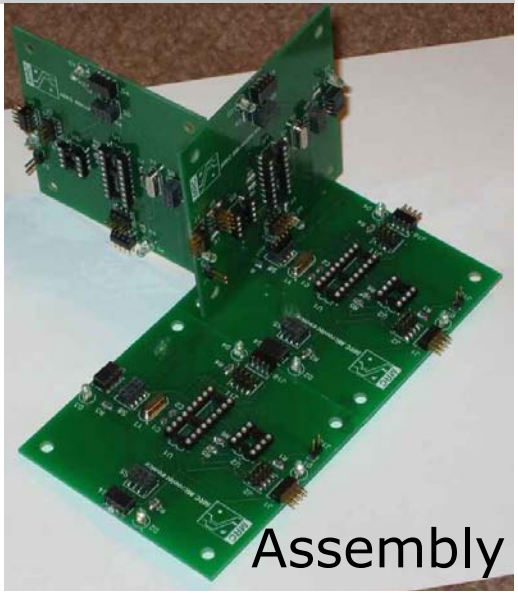

- Artificial cellular experiments conducted 2003-2005
- Cells employ DNA-like functionality
  - Structures "inherit" a genetic sequence"
  - Each structural element "knows" the entire structure (hundreds to millions of elements)

Guided self-assembly

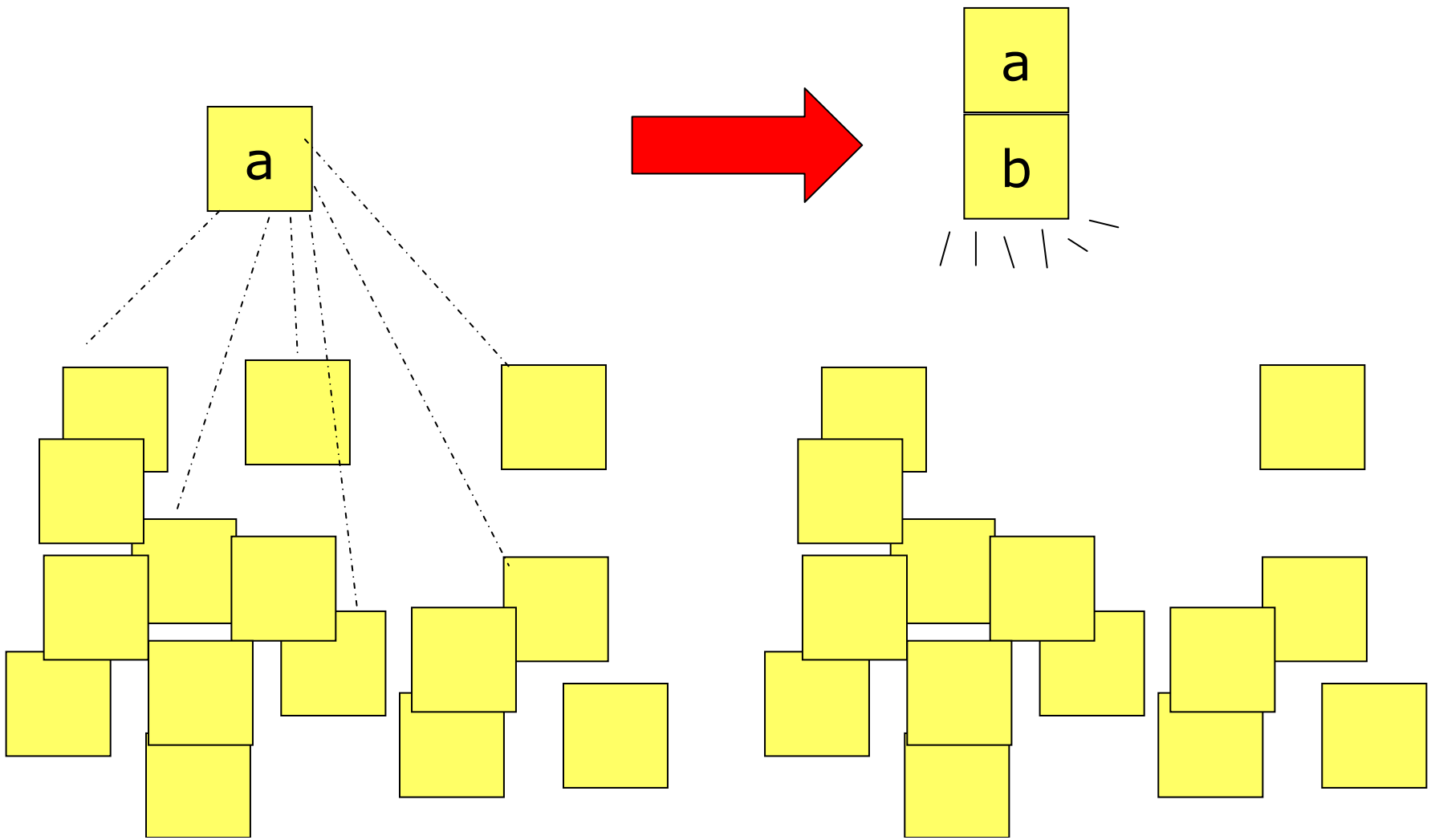

Guided self-assembly

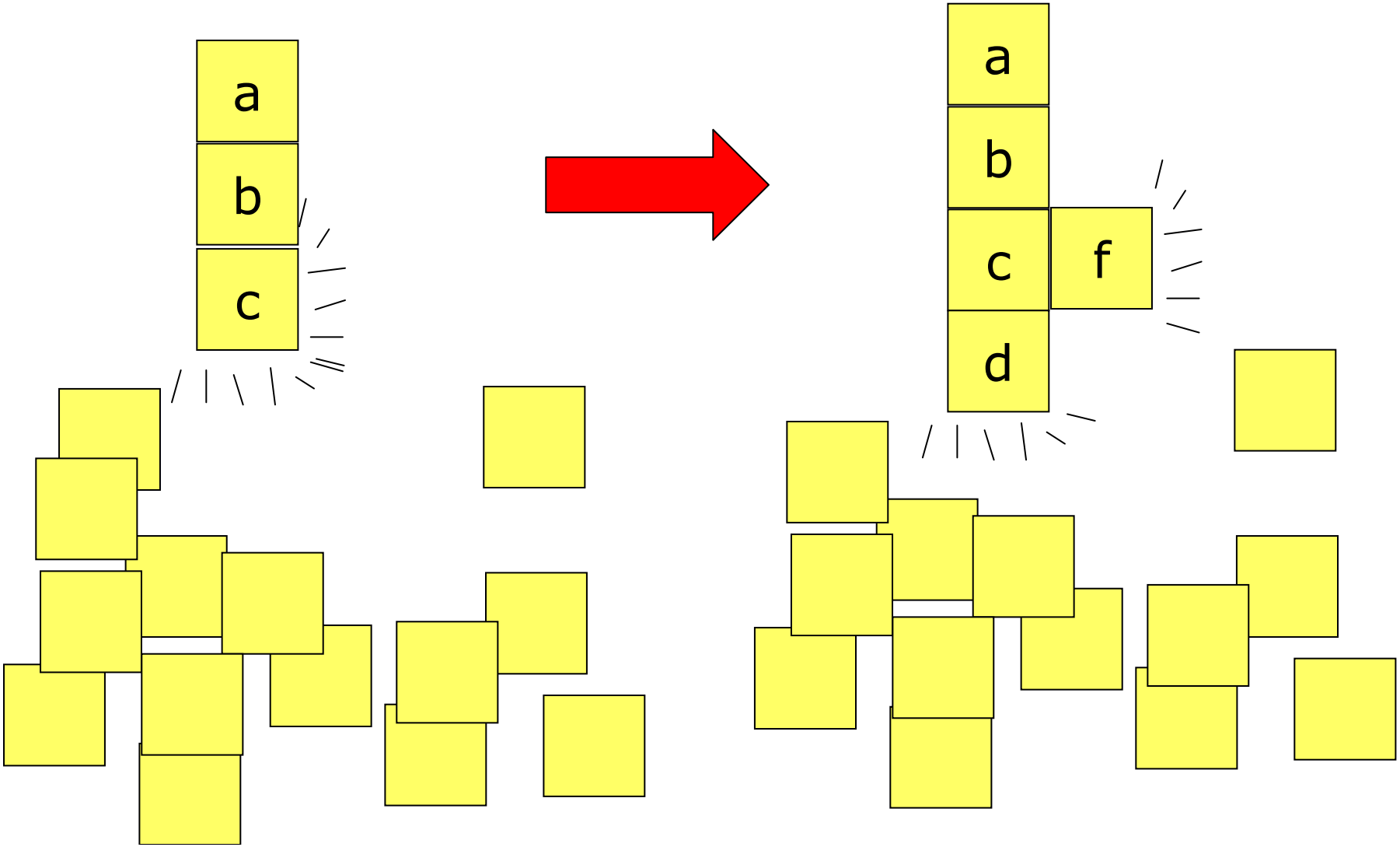

Guided self-assembly

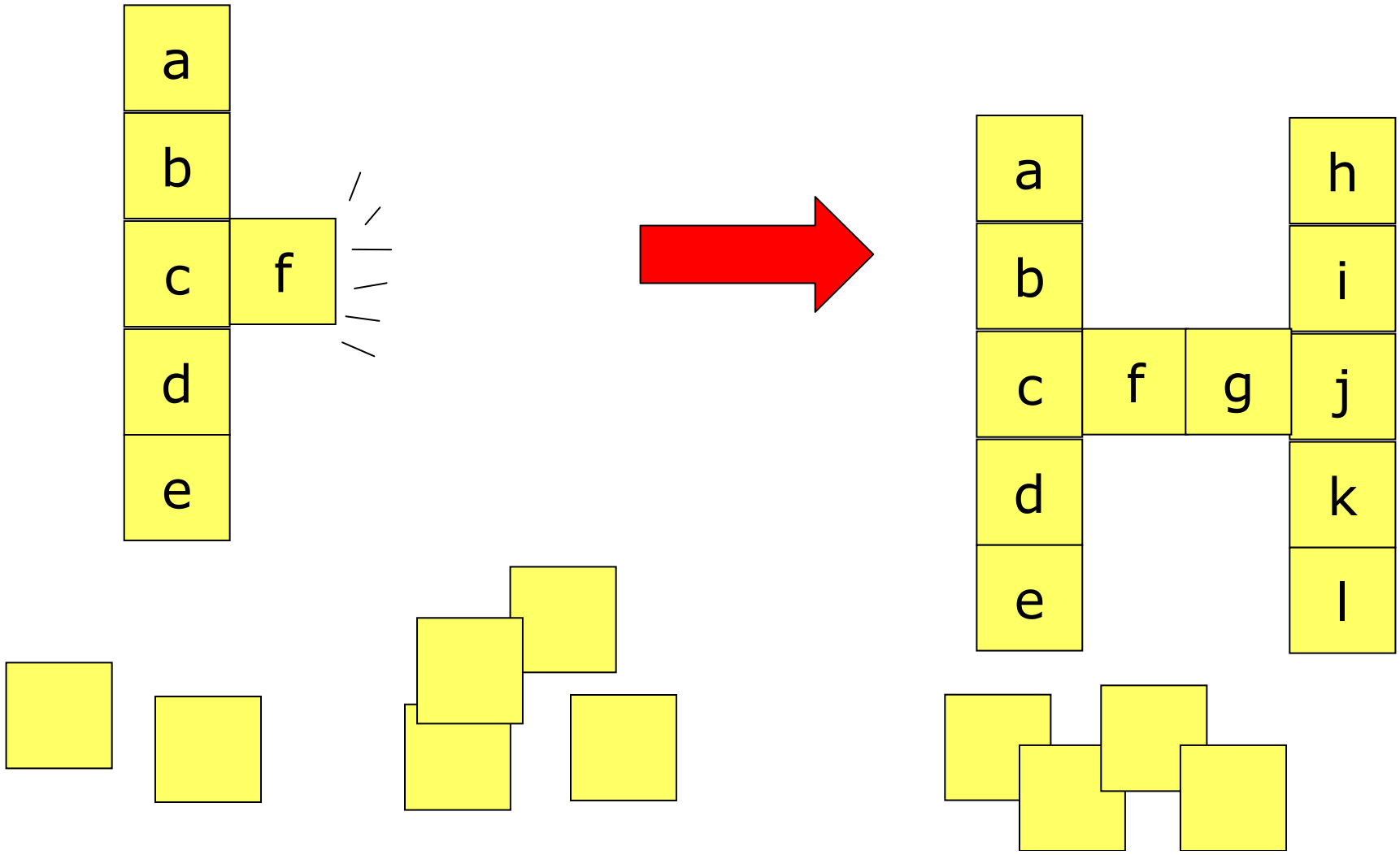

Modular Robots (Xerox PARC)

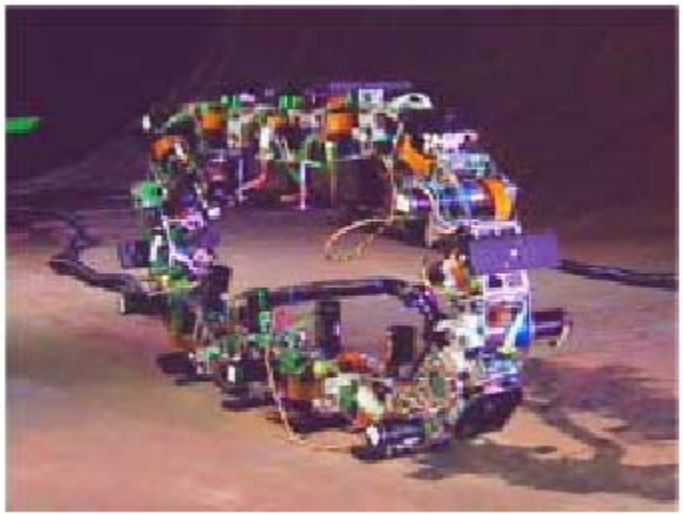

- Robots built as collection of identical hardware/software modules with actuators, sensors
- Capable of cooperative function and dynamic morphing
  - Locomotion
  - Reconstitution

Guided self-assembly – self repair

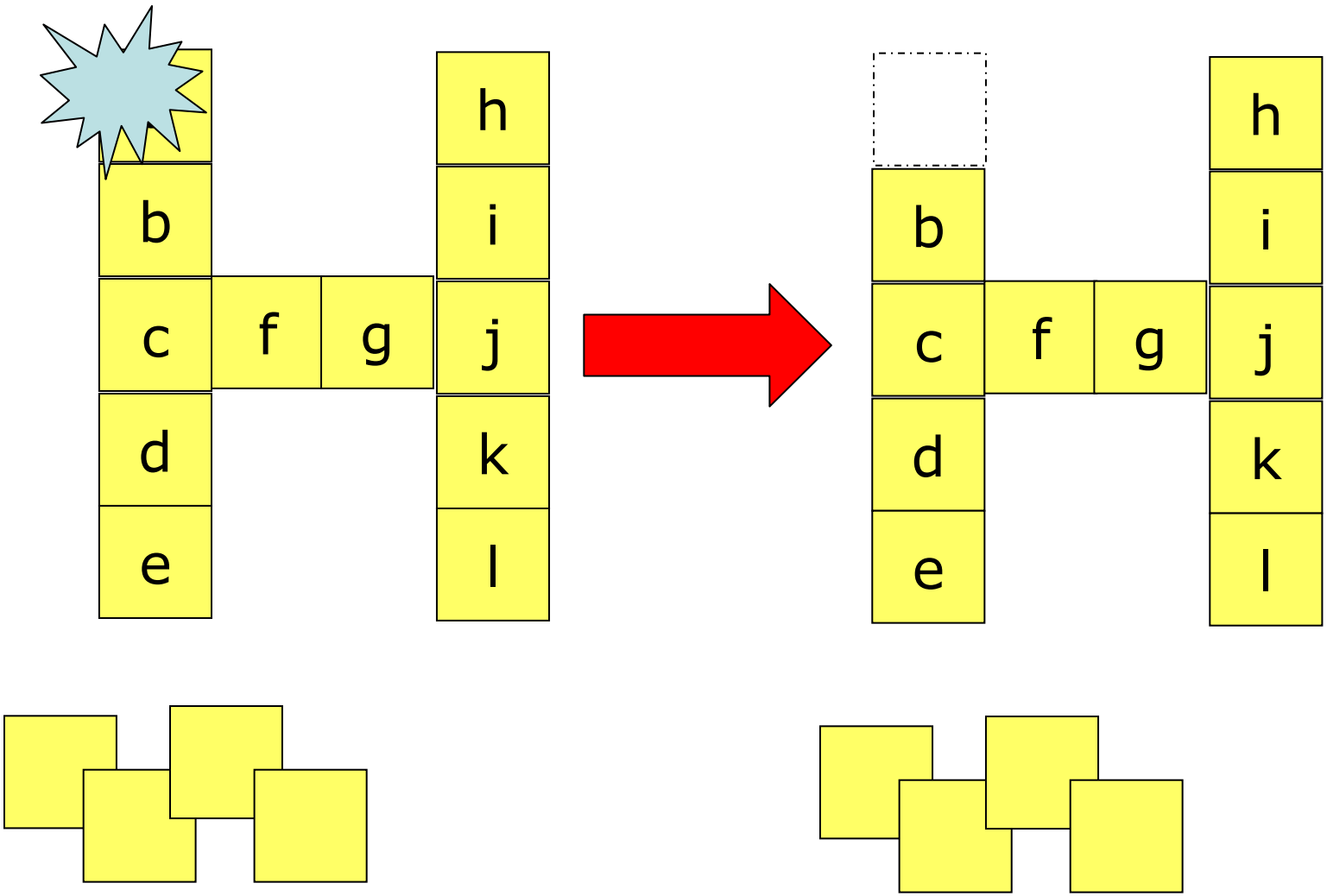

Guided self-assembly – self repair

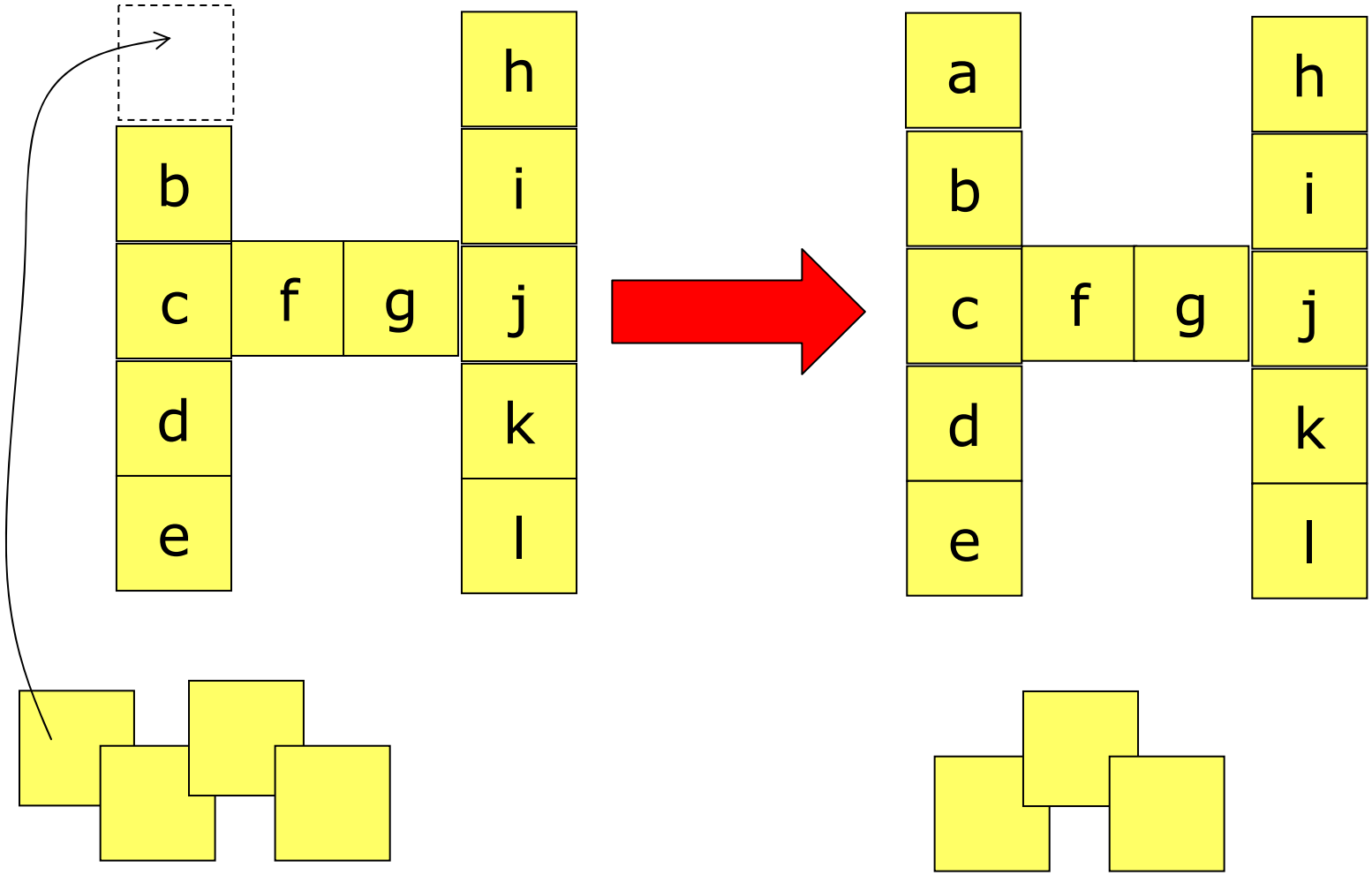

Guided self-assembly – self reproduction

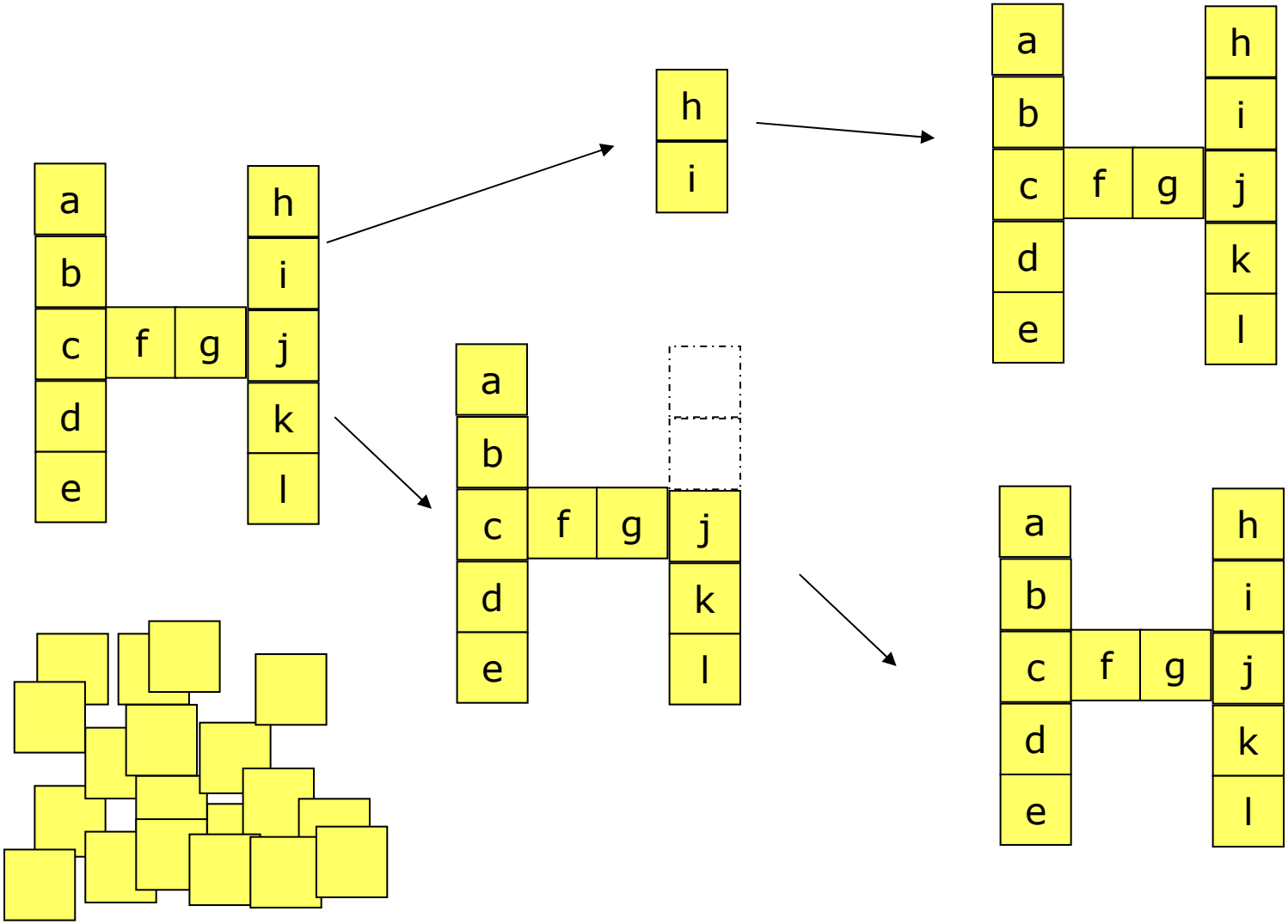

Cellular Architecture

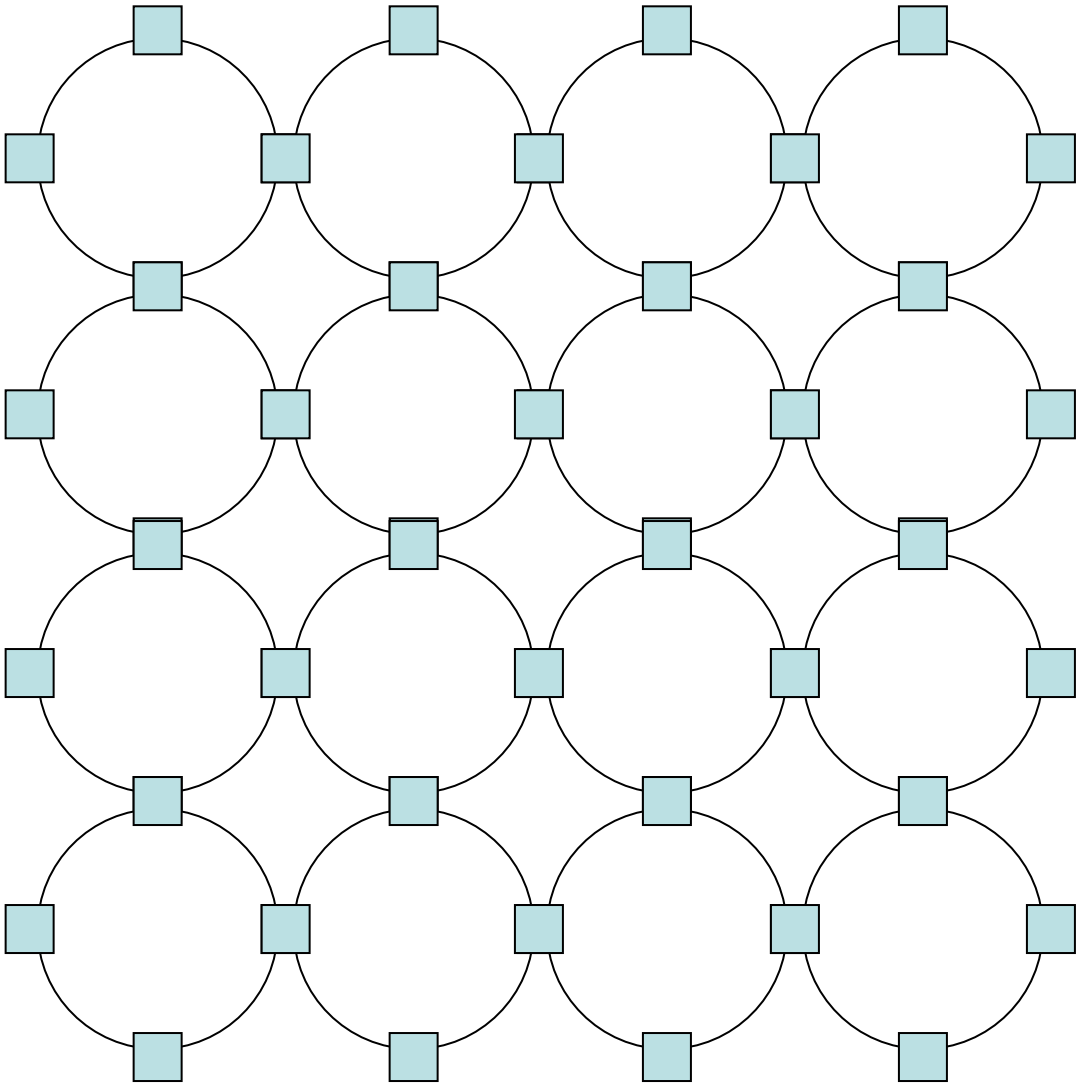

- A simple "LEGO" universe

Brainy Cells?

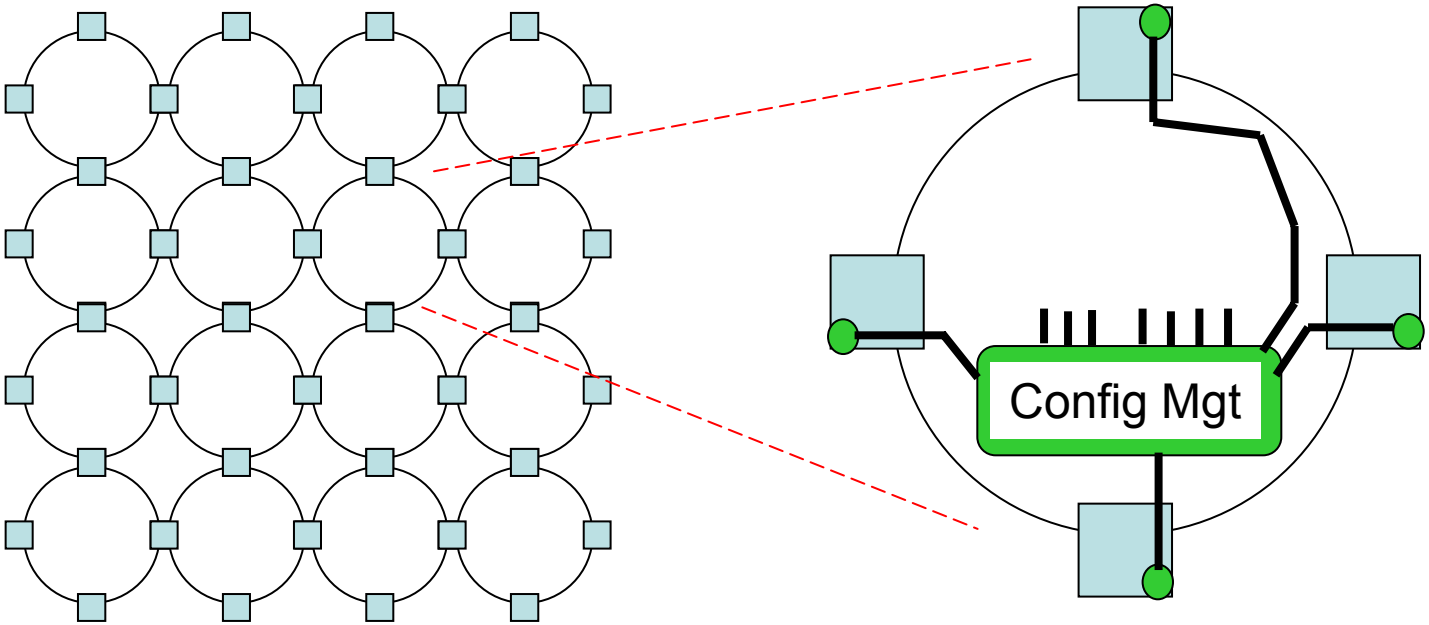

- Cells contain ability to manage artificial DNA, understanding of own state, state of neighborhood
- Connections can be manual, automatic, locomotive

Rules

- Rules define connective relationships between cells
- Worst case rules have high Kolmogorov complexity

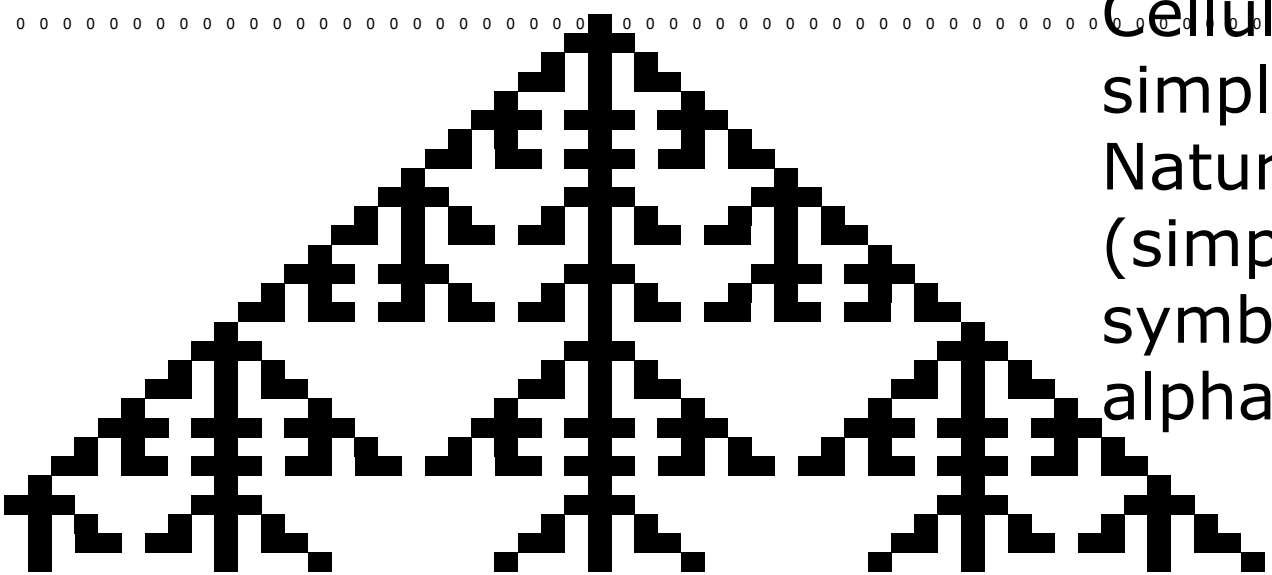

Cellular automata have simple rules
Nature has simple rules (simple virus 3k-5k symbols from 4-symbol alphabet)

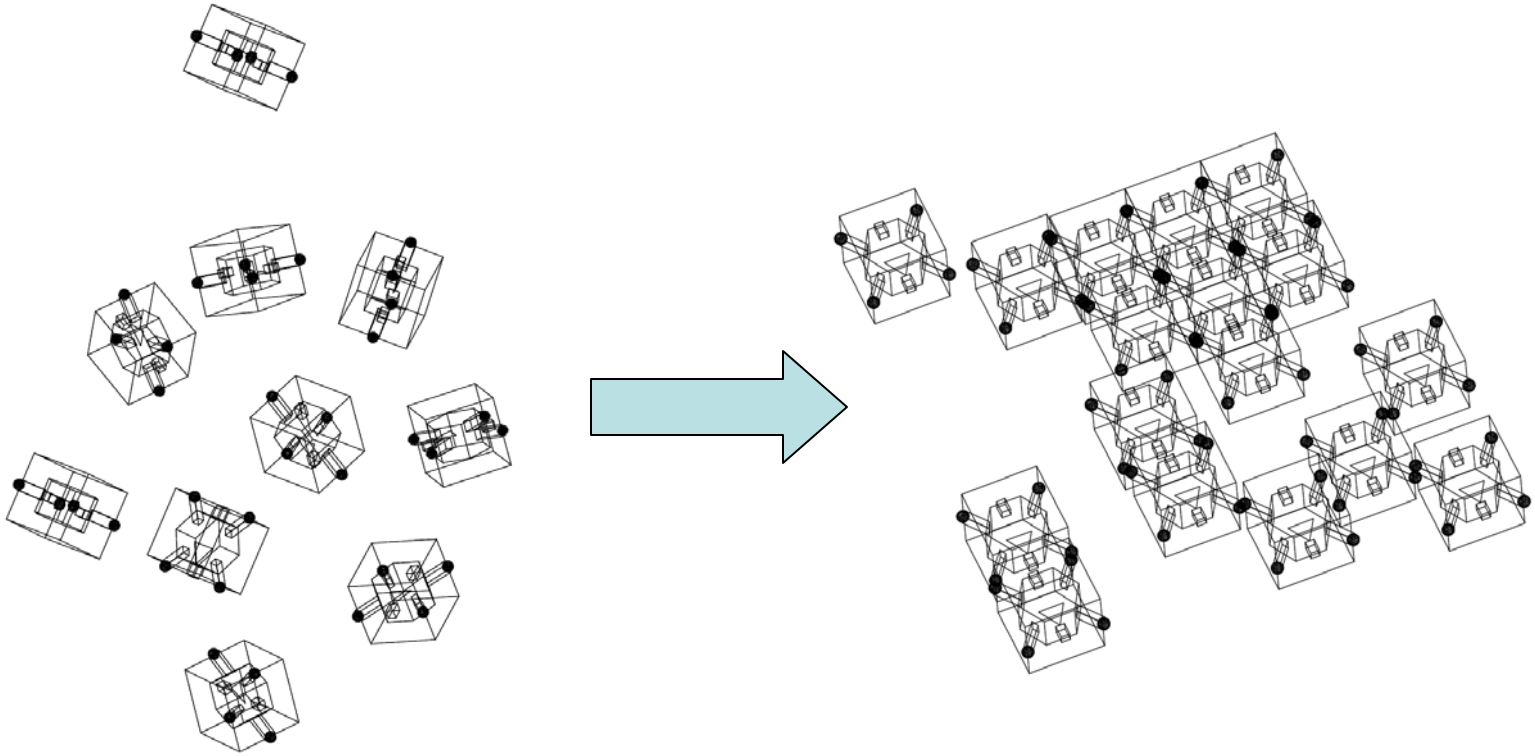

(Recursive) Reconfigurability

- Definition: software-definable functionality
- Reduction of functions that personalize a cell (system) as a set of 0-1 decisions

Simple example of recursive reconfiguration – field programmable gate array (FPGA)

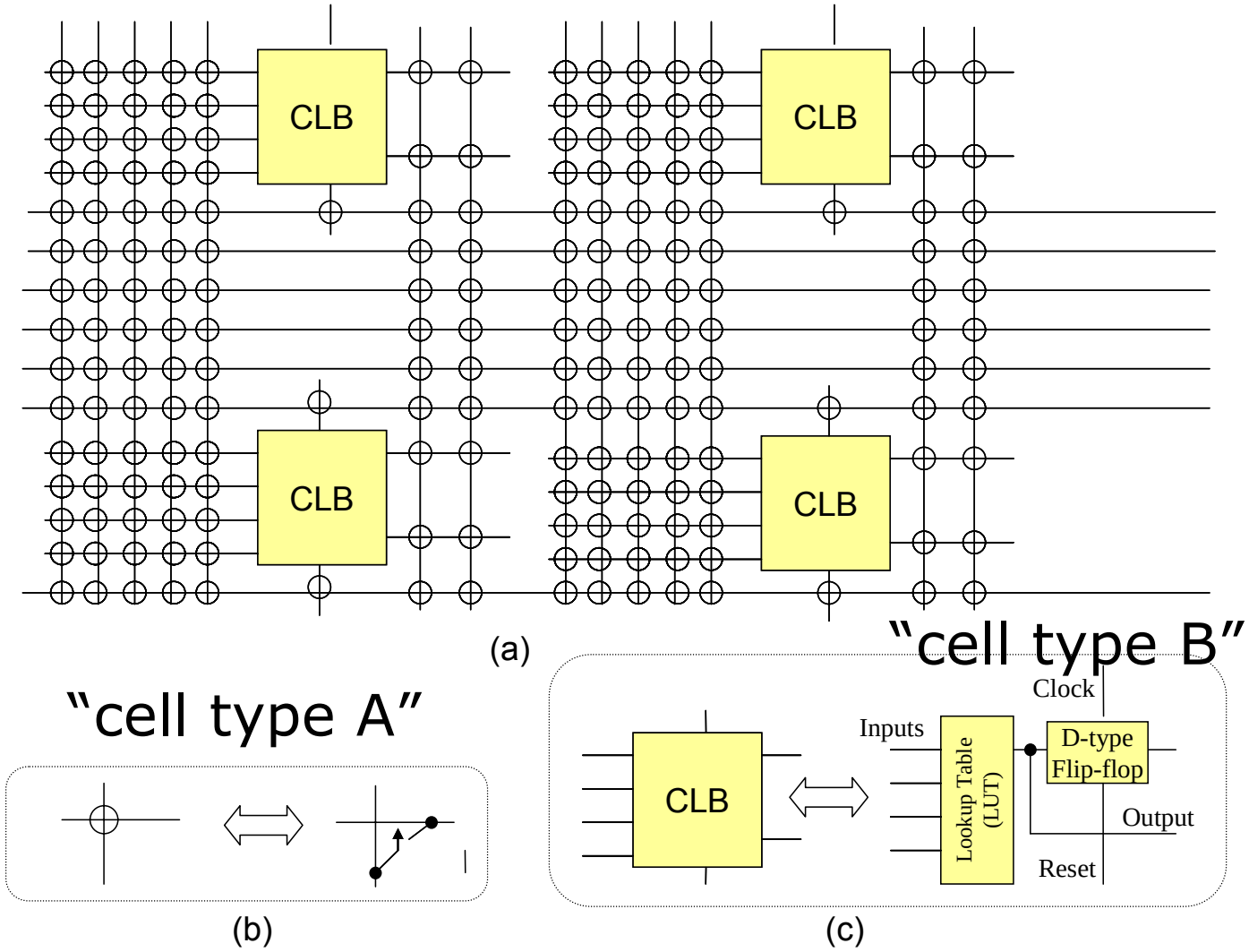

FPGA example - continued

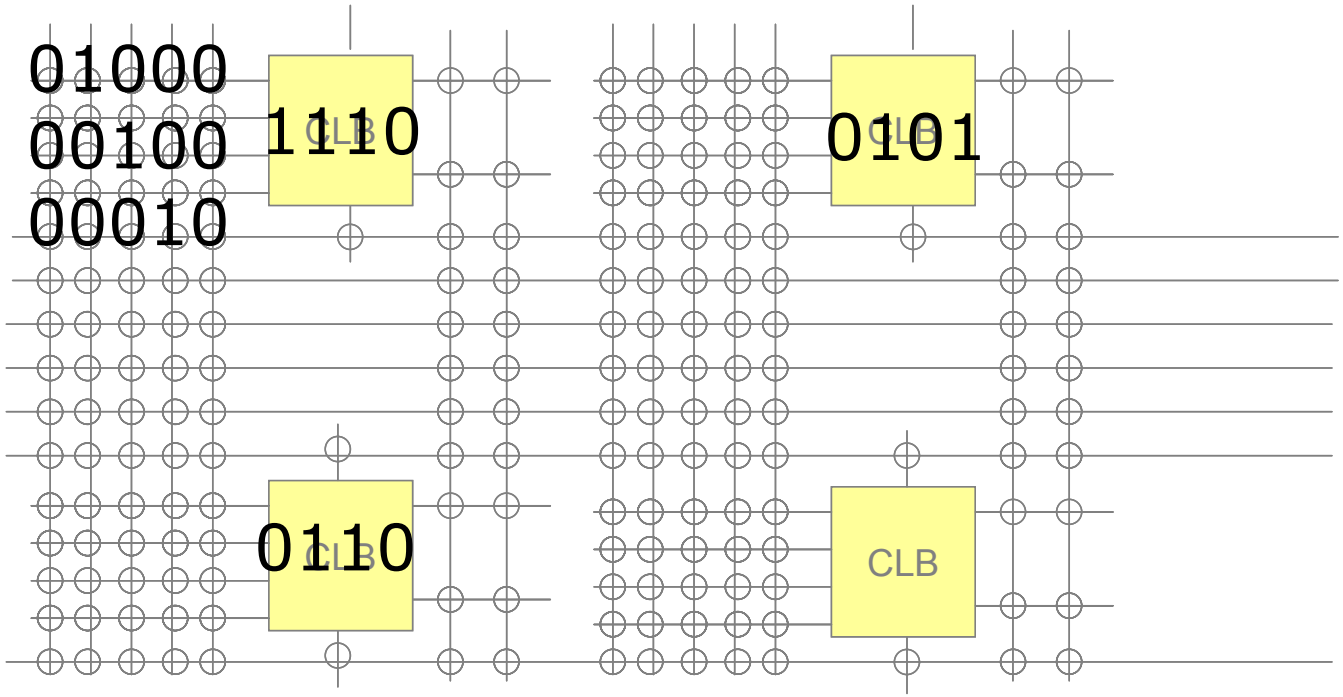

Final “DNA”

01000001000010….1110…0110…0101

A (future?) generalized reconfigurable analog system

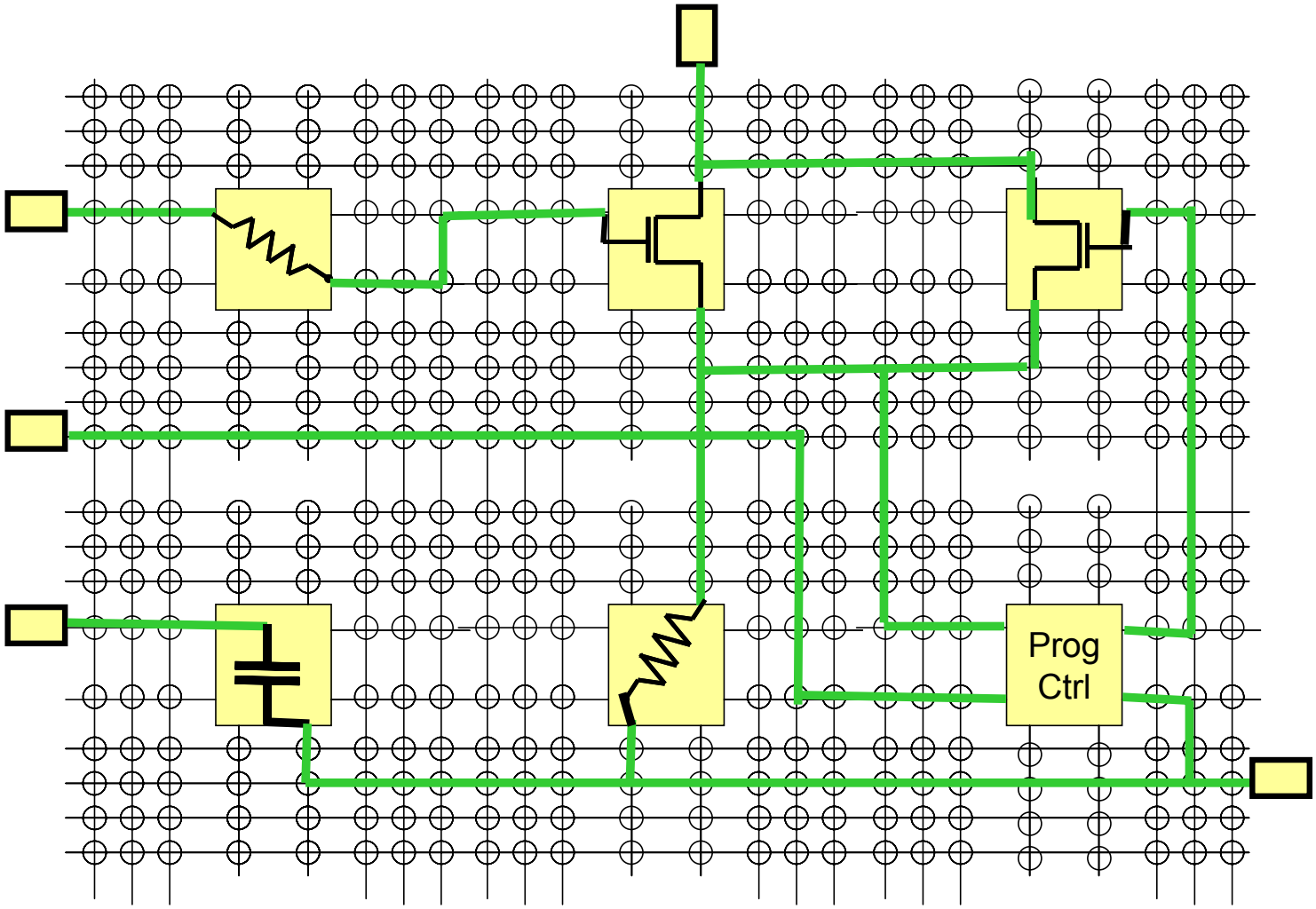

Reconfigurable Systems Taxonomy

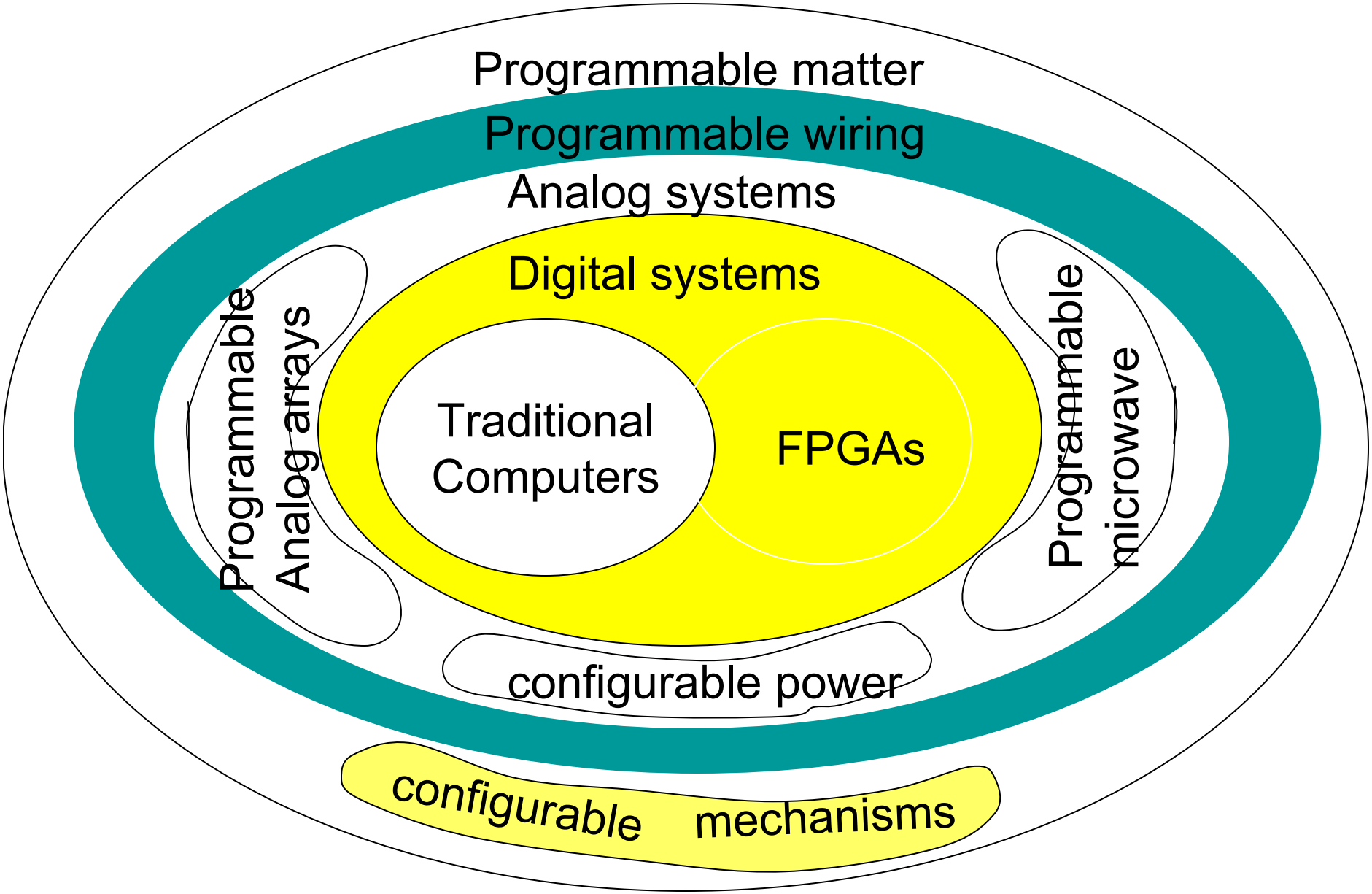

Augmenting Architecture of Cell for Reconfigurability

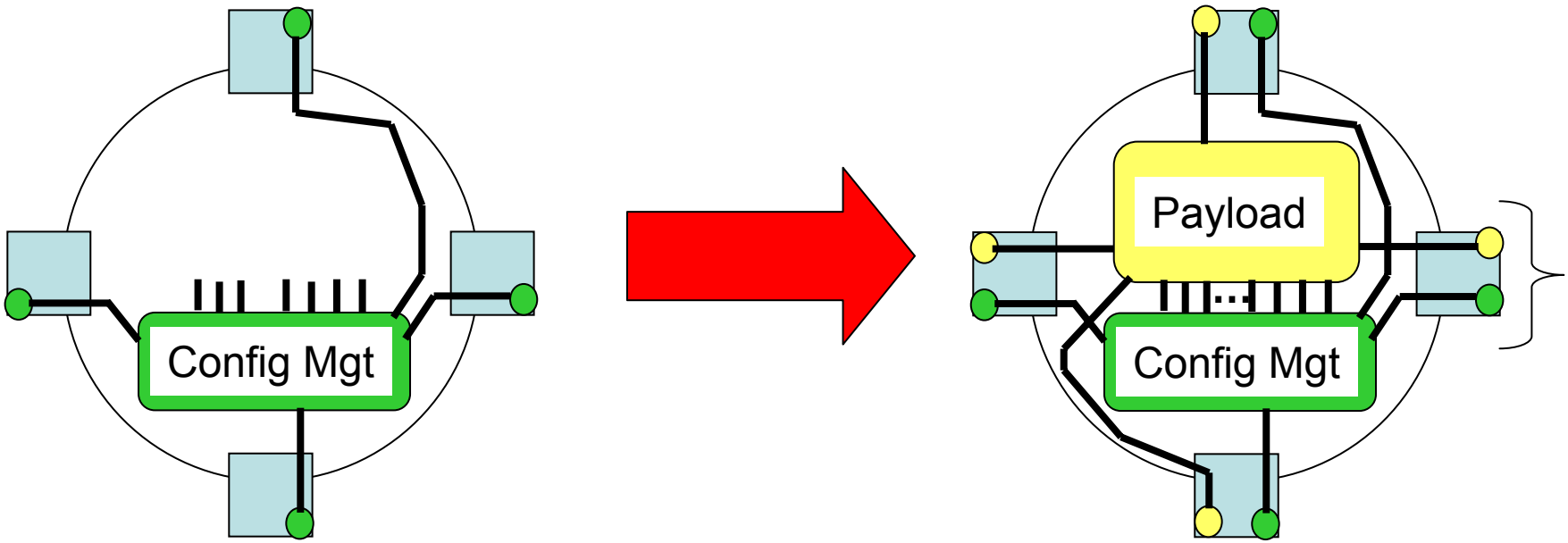

Augmented Cellular Architecture

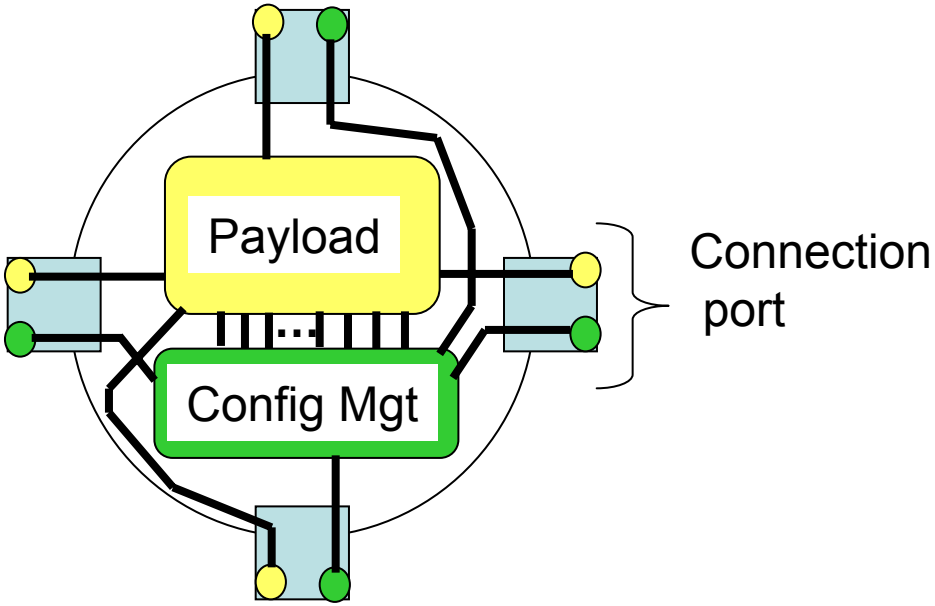

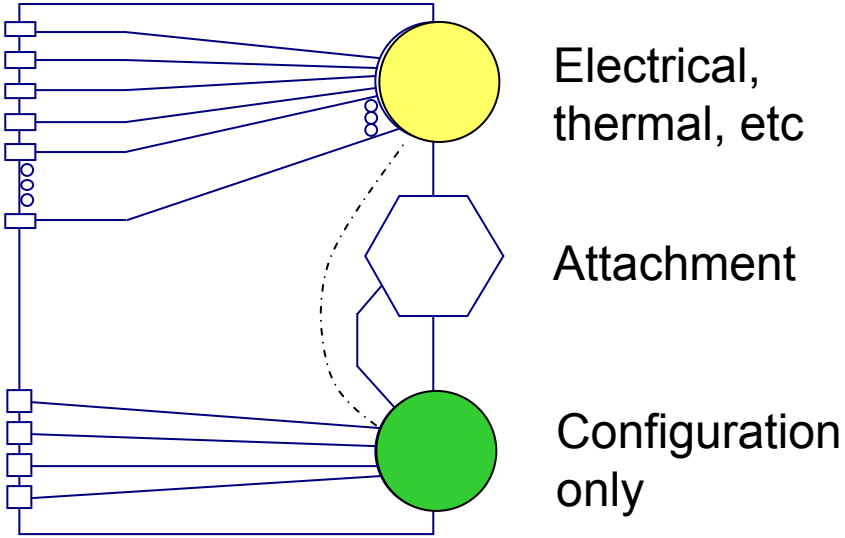

Example: Pixilated Antenna

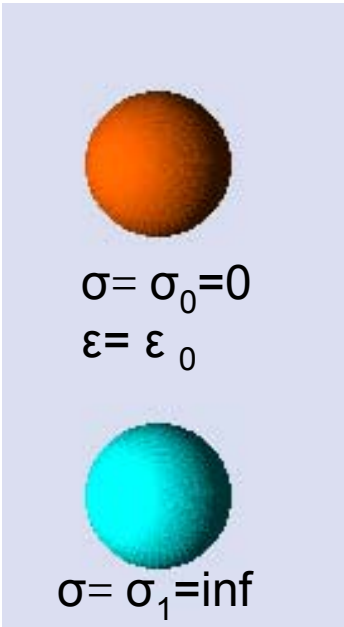

(a)

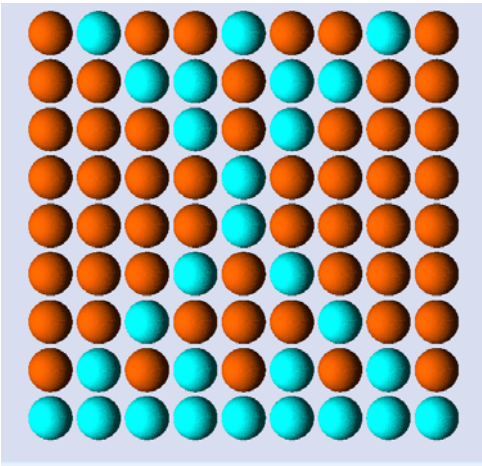

(b)

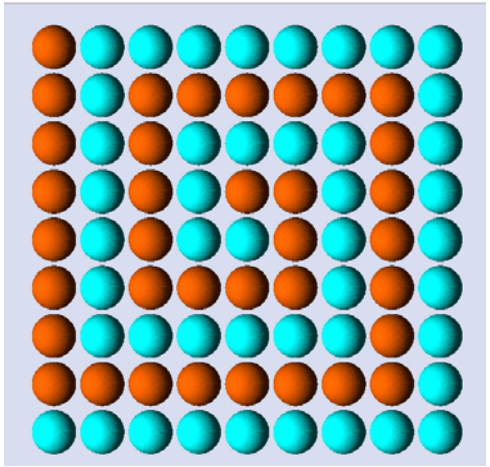

(c)

Example Possible Cell types

- σ-cells, a family of cells relating to the exploitation of conductivity;
- L-cells, a family of the familiar lumped element electrical blocks from simple circuit theory (resistors, capacitors, transistors);
- *c*-cells, computation / storage elements (variations of those found in FPGAs);
- *k*-cells, programmable thermal elements;
- ε-cells, programmable permittivity;
- *E*-cells, pertaining to energy storage;
- *g*-cells, programmable mechanical attachment;
- *s*-cells, for sensing phenomenologies and converting them to electrical signals;
- μ-cells, for programming permeability;
- η-cells, for photonic (light-routing) applications;
- α-cells, for transduction / actuation (conversion of electrical signals to some other phenomenology, including locomotion);

Example Cellular wiring harness

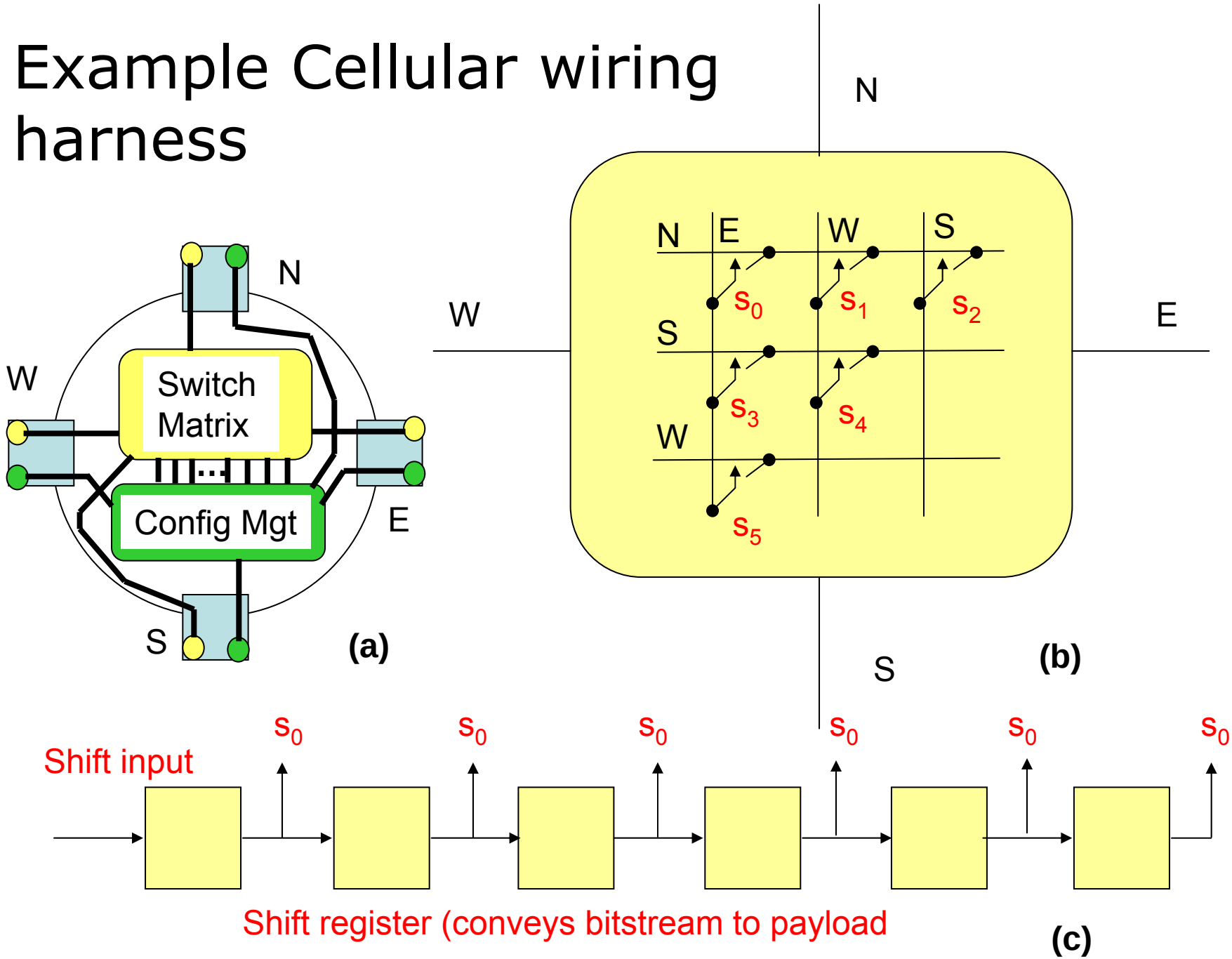

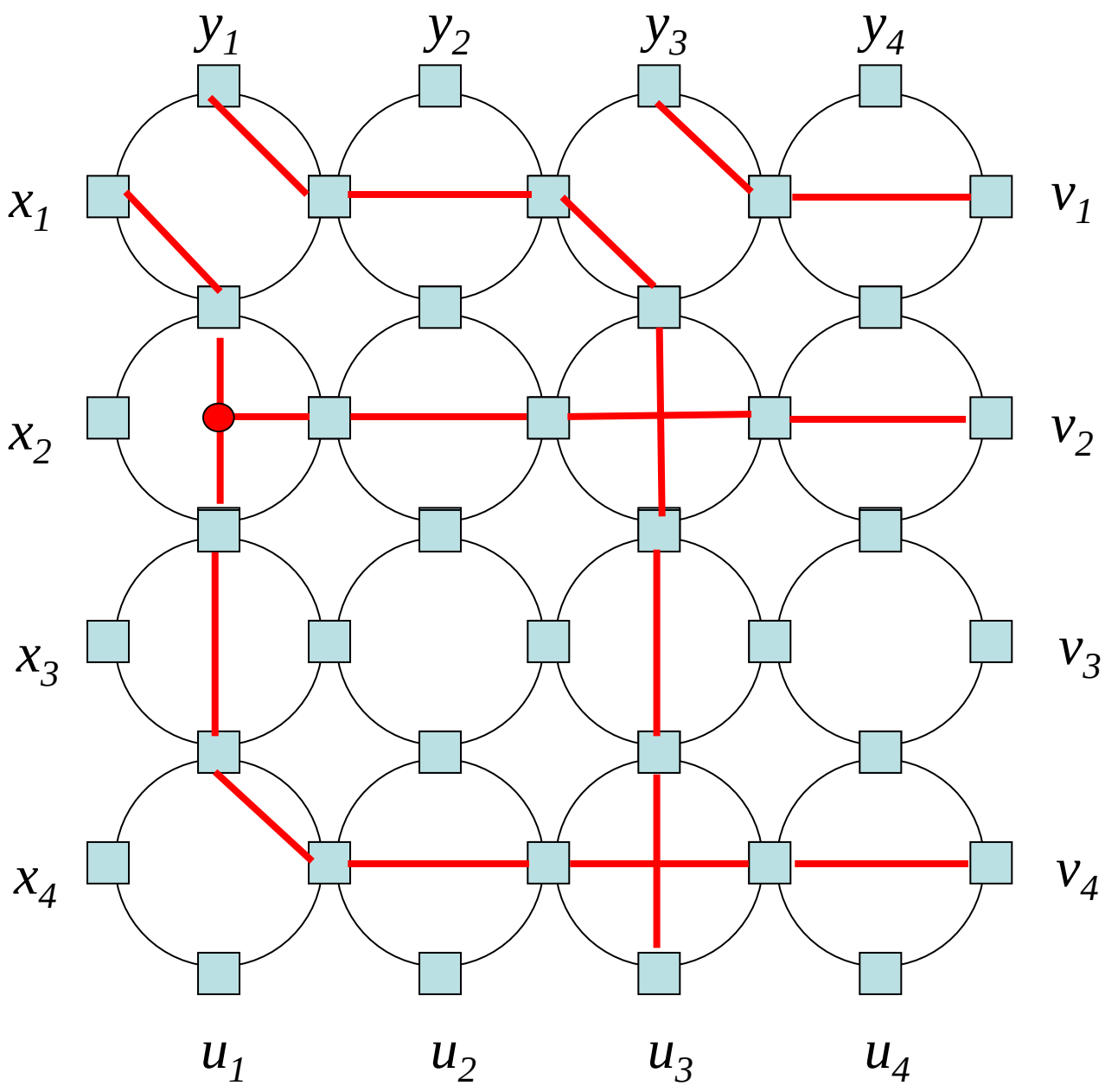
y_1
y_2
y_3
y_4
x_1
x_2
x_3
x_4
v_1
v_2
v_3
v_4
u_1
u_2
u_3
u_4

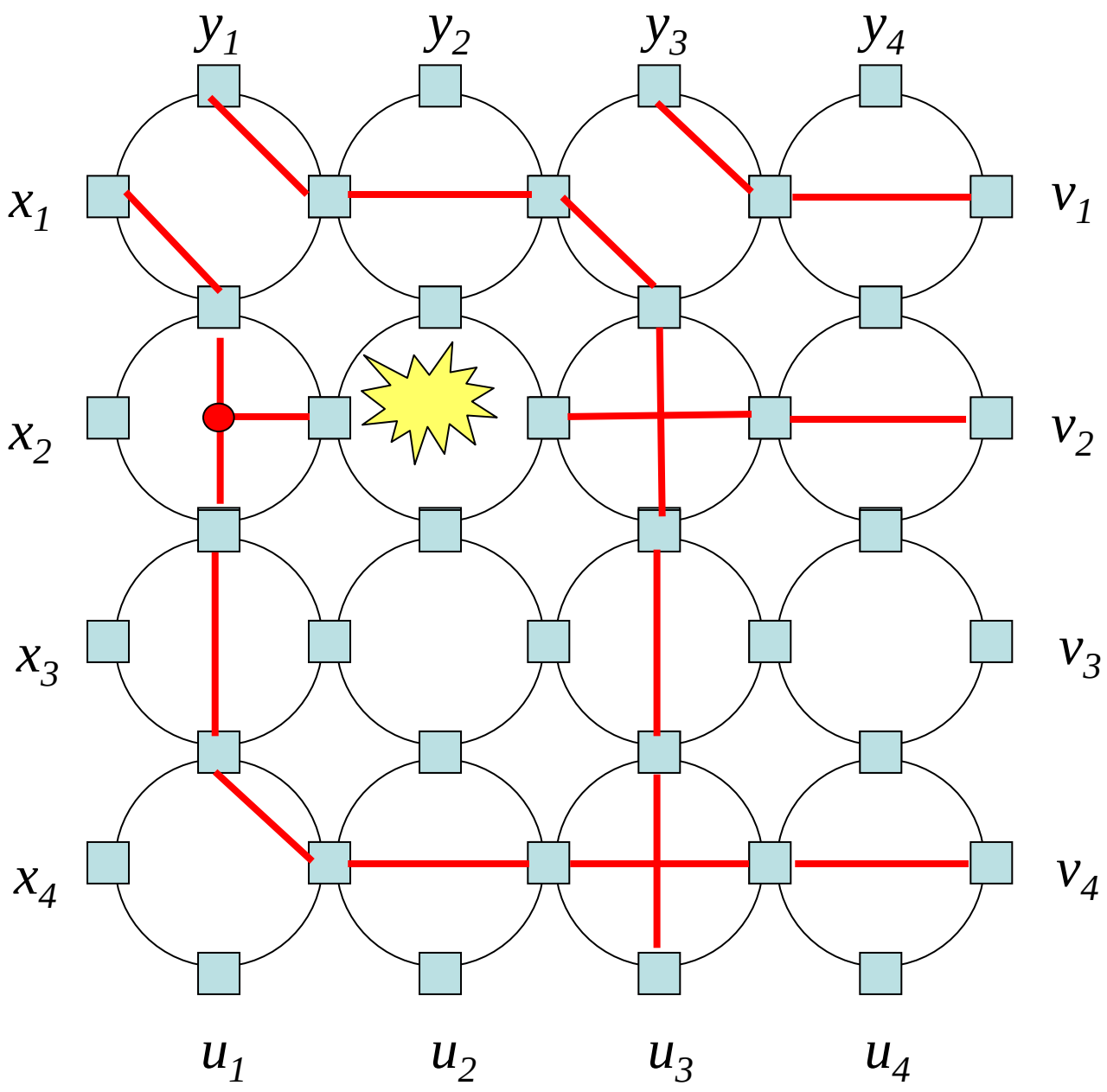
y_1
y_2
y_3
y_4
x_1
x_2
x_3
x_4
v_1
v_2
v_3
v_4
u_1
u_2
u_3
u_4

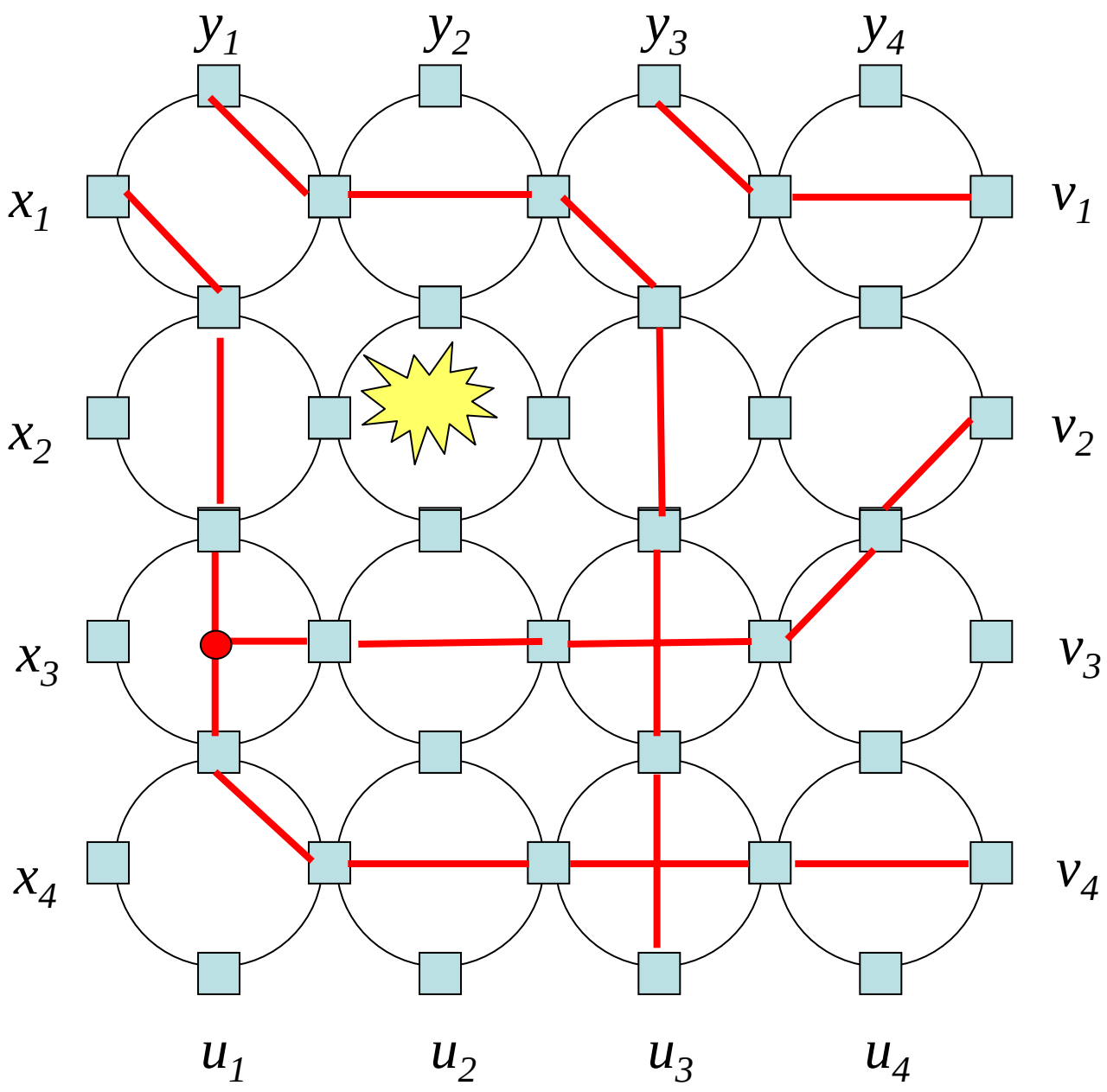
y_1
y_2
y_3
y_4
x_1
x_2
x_3
x_4
v_1
v_2
v_3
v_4
u_1
u_2
u_3
u_4

PnP Architecture

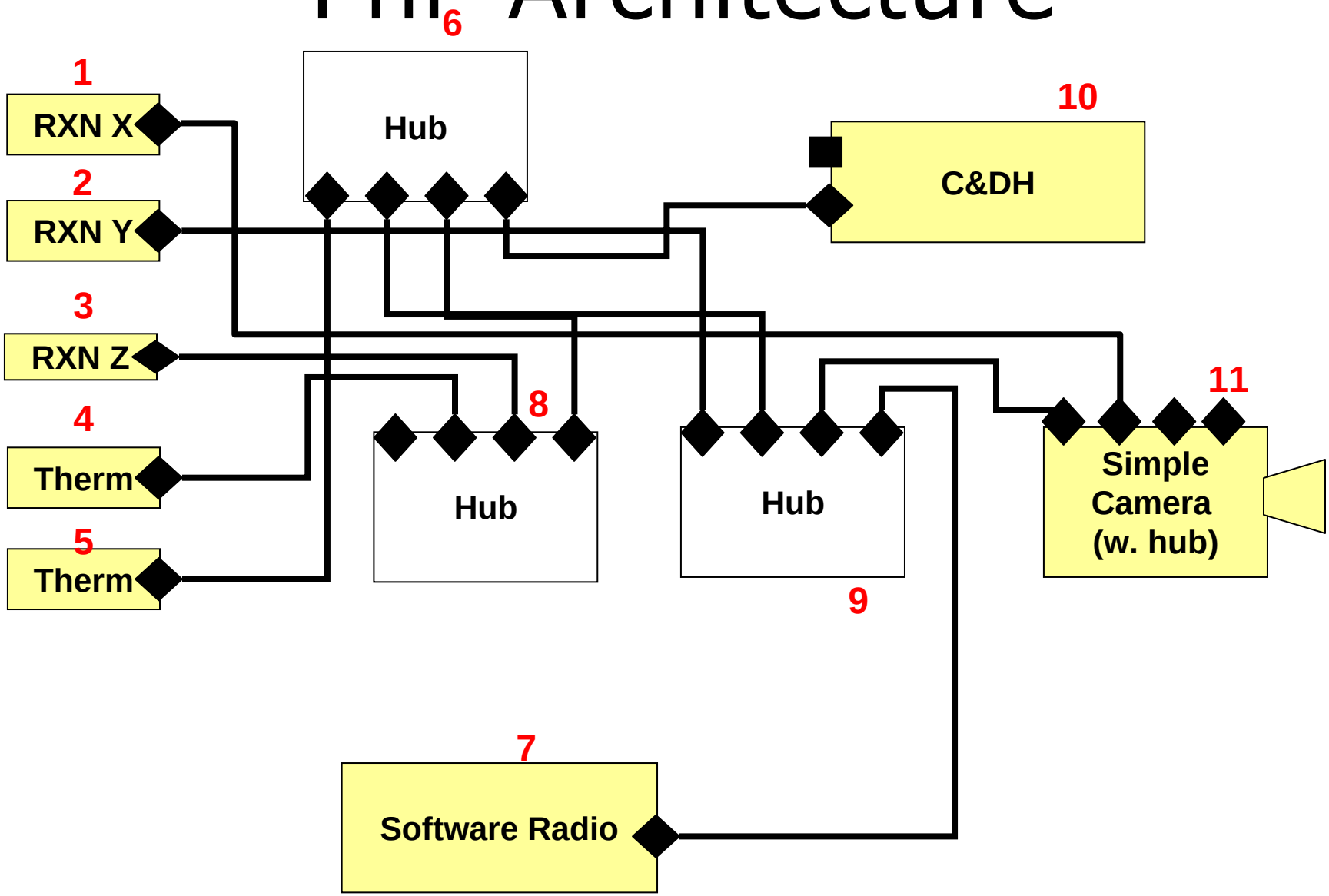

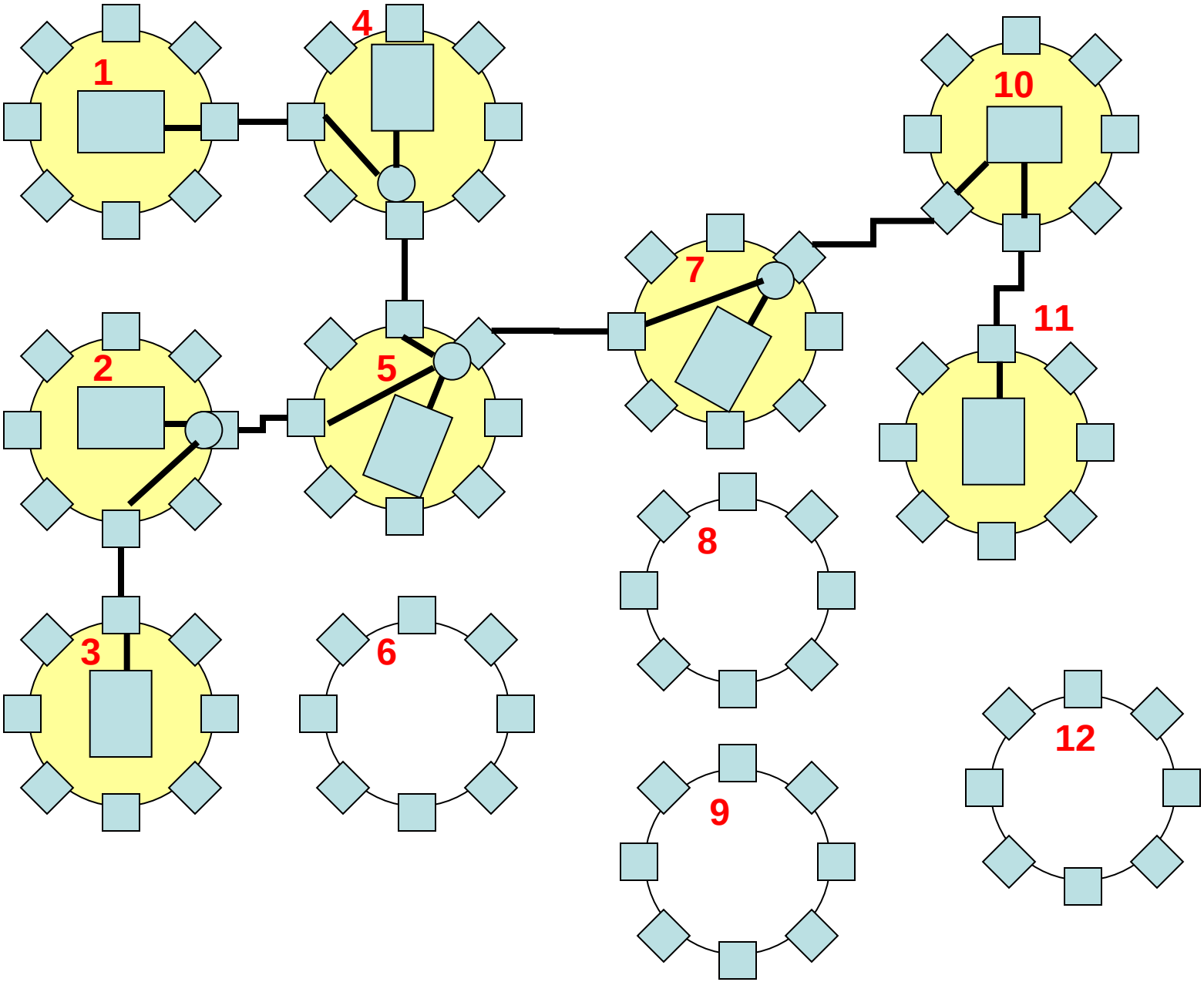
1
4
10
7
11
2
5
8
3
6
12
9

Cellular Construction of Spacecraft

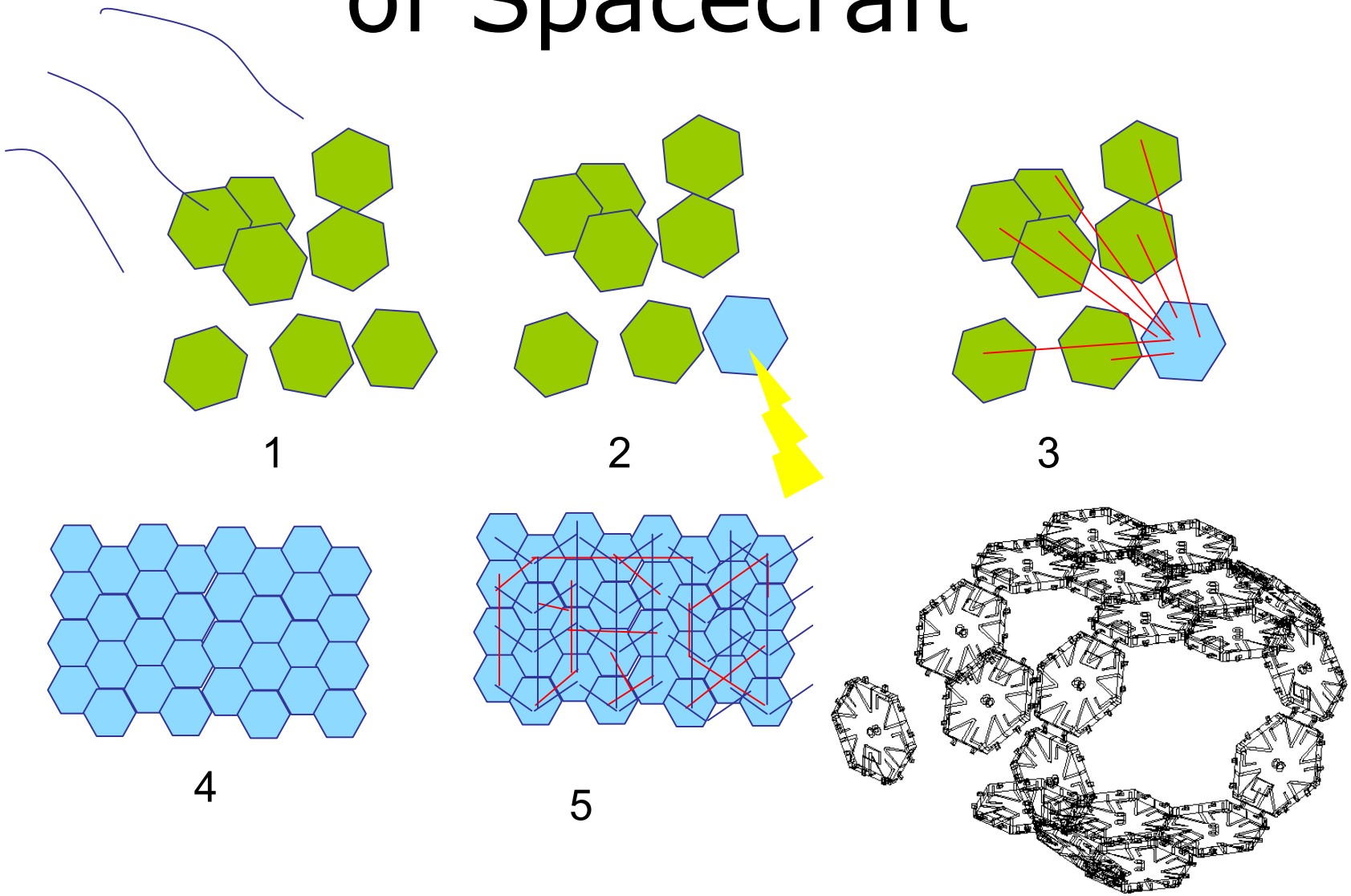

Summary

- Cellularity has been suggested as a powerful motif for future systems
- Discussed concepts and implications
- Not totally ready for prime time
  - Practical (useful?) demonstrations will be possible in limited domains with 3-5 years
- Limit argument is compelling – smart dust, instant systems