Utah State University
DigitalCommons@USU

Space Dynamics Lab Publications | Space Dynamics Lab

1-1-1992

Optimal Support Structures for Chopping Mirrors

Tina M. Valente

Daniel Vukobratovich

Roy Esplin

Follow this and additional works at: https://digitalcommons.usu.edu/sdl_pubs

Recommended Citation

Valente, Tina M.; Vukobratovich, Daniel; and Esplin, Roy, "Optimal Support Structures for Chopping Mirrors" (1992). *Space Dynamics Lab Publications.* Paper 134.
https://digitalcommons.usu.edu/sdl_pubs/134

This Article is brought to you for free and open access by the Space Dynamics Lab at DigitalCommons@USU. It has been accepted for inclusion in Space Dynamics Lab Publications by an authorized administrator of DigitalCommons@USU. For more information, please contact digitalcommons@usu.edu.

Valente, Tina M., Daniel Vukobratovich, and Roy Esplin. 1992. "Optimal Support Structures for Chopping Mirrors." *Proceedings of SPIE* 1690: 366–75. doi:10.1117/12.138013.

Optimal support structures for chopping mirrors

Tina M. Valente
Optical Sciences Center / RMR Design Group, Inc.
University of Arizona
Tucson, AZ

Daniel Vukobratovich
Optical Sciences Center
University of Arizona
Tucson, AZ

Roy Esplin
Space Dynamics Laboratory
Utah State University
Logan, Utah

1. INTRODUCTION

The merits of a tangential spider vane support (Figure 1) as opposed to a traditional radial vane support (Figure 2) for telescope secondary mirrors are examined. Considerable interest in tangential spider design has been shown in recent large telescope projects. This configuration is used to limit vibration during the operation of the chopping secondary by improving the torsional stiffness.

As a chopping secondary mirror oscillates, it excites a number of vibratory modes in the secondary mirror support spider. Chopping motion tilts the axis of the secondary mirror. An additional rotation of the spider will induce a translation of the vertex of the secondary mirror in a direction perpendicular to the direction of the chopping motion. Translation of the vertex in an uncontrolled direction creates additional optical aberrations in the image plane and decreases the signal to noise ratio (SNR).

Torsional stiffness is a problem for conventional Cassegrain telescopes. Due to manufacturing tolerances, the optical axis of the secondary mirror is usually not coincident with the mechanical center of symmetry of the spider. Since the mechanical and optical axis are not coincident, rotation of the spider will introduce error into the alignment of the telescope producing optical aberrations.

While many projects have used the tangential method of mounting secondary mirrors as a means to increase torsional stiffness, a controversy still exists as to the superiority of this mounting configuration. Finite element models were constructed for both the radial and tangential spider supports. These models were used to compare stiffnesses of the competing configurations. These results were compared to a strength of materials closed form solution for the torsional stiffness. The diffraction effects of the supports are examined as well as the issues of fabrication and assembly.

 0-8194-0855-7/92/$4.00

Downloaded From: http://proceedings.spiedigitallibrary.org/ on 09/24/2014 Terms of Use: http://spiedl.org/terms

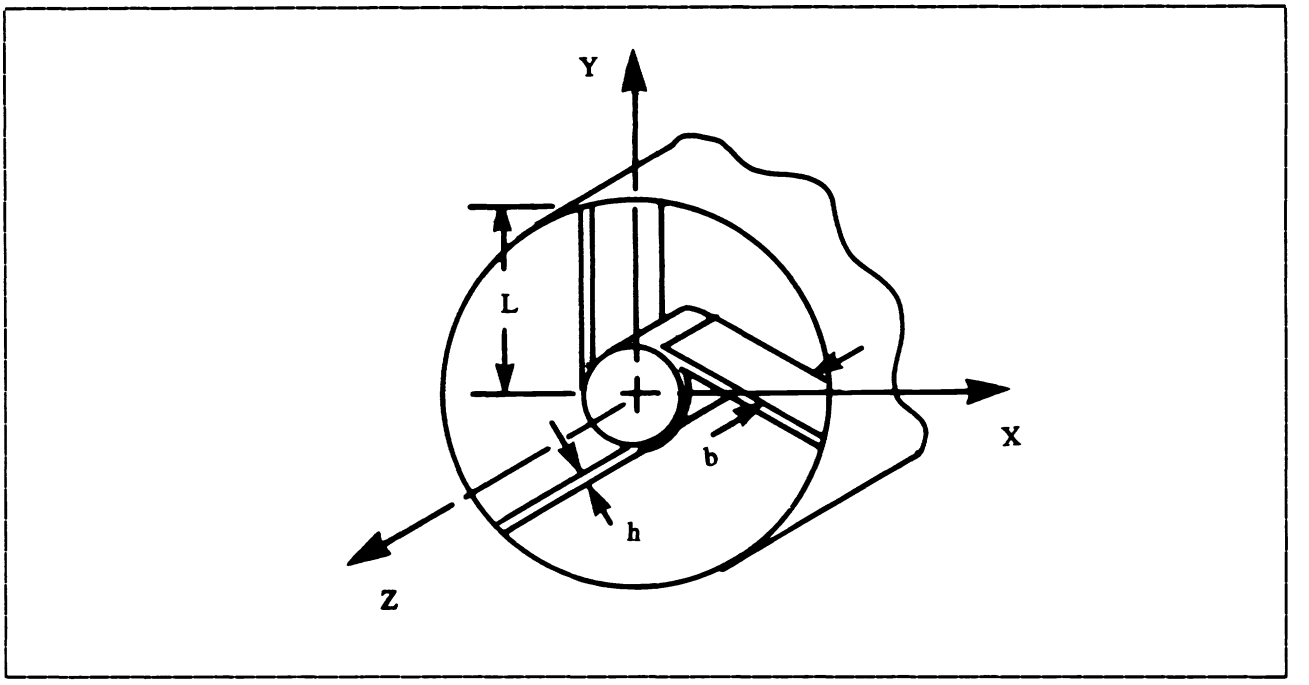

Figure 1. Tangential spider vane support

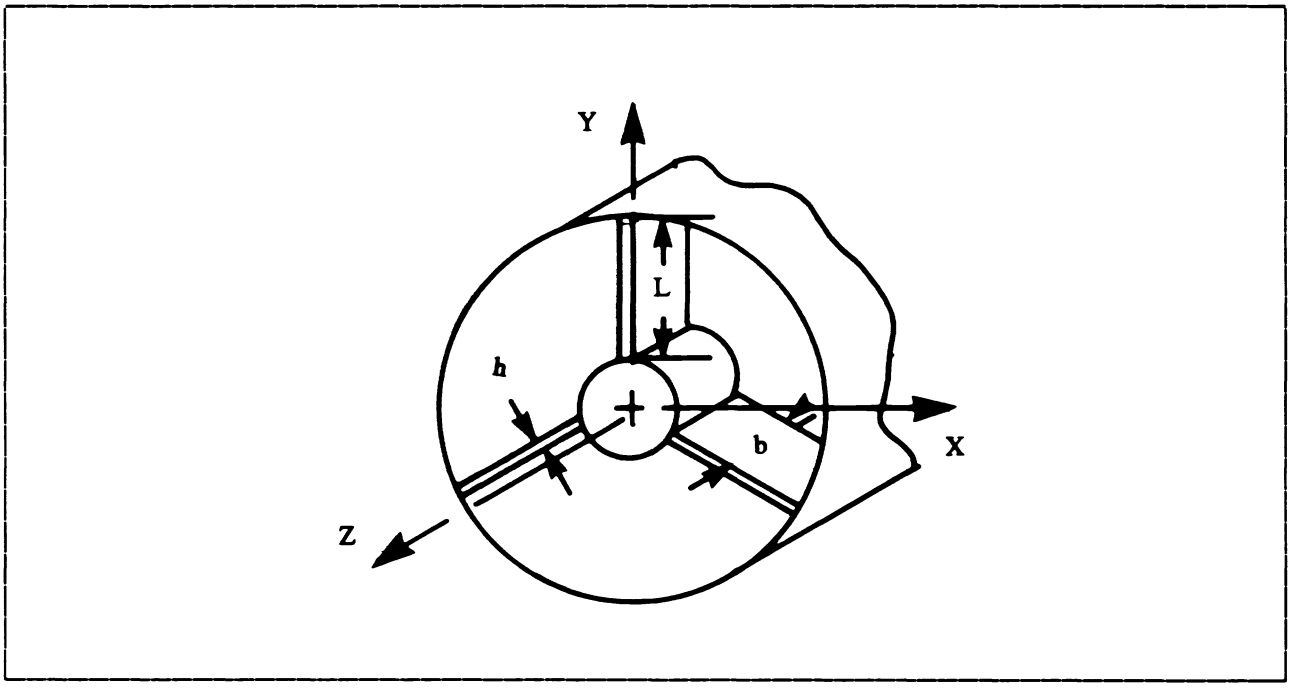

Figure 2. Radial spider vane support

Downloaded From: http://proceedings.spiedigitallibrary.org/ on 09/24/2014 Terms of Use: http://spiedl.org/terms

2. HISTORICAL OVERVIEW

Tangential spider vane supports for telescope secondary mirrors were suggested by Morse in 1941.[1] Morse claimed that a four vane tangential spider configuration would be stiffer than the traditional radial vane configuration. Morse, however, did not include either a structural analysis or experimental results in his short note. In 1946, Hargreaves discussed an actual tangential vane spider assembly.[2] Hargreaves claimed that a tangential vane spider did not vibrate at all in comparison with a conventional radial vane spider.

In 1952, the Lick Observatory completed a 120 inch diameter reflector with a five vane spider assembly. This spider assembly is very similar to a conventional four vane spider except that one of the radial vanes is replaced with a pair of tangential vanes that are parallel to each other. This vane assembly is partially visible in a number of photographs of the telescope. A very clear photograph of the vane configuration is given in Loomis.[3] This configuration was selected to minimize vibration and to improve torsional stiffness. Anecdotal evidence of excessive torsional deflection of the secondary mirror in the Mcdonald 82 inch telescope is usually given as the reason for this five vane configuration.

Tangential vanes have now been designed to support secondary mirrors for a wide variety of space optical telescopes. The tangential vane configuration is preferred over the radial vane design to improve stiffness and limit possible torsional vibration. In 1980 Pepi described the use of composite torsional vanes in the TEAL RUBY telescope system.[4] TEAL RUBY was given extensive space qualification shake tests, and had a lowest fundamental frequency of 15 Hz. More recent space telescopes including tangential vane configurations include the Zeiss all-Zerodur laser communications telescope[5] and the SILEX (Matra) composite laser communications telescope.[6] The Mars Observer Camera (MOC) system employs a 0.35 m single arch fused silica primary mirror, a composite tube, and a composite tangential spider.[7] This system passed an extremely rigorous shake test; the tangential spider served to increase stiffness and limit vibration. All of the systems described in this paragraph are from 0.3 to 0.6 m in aperture.

There is considerable interest in tangential spider design for recent large telescope projects. The NASA 3 m SOFIA airborne telescope design uses a four vane tangential spider to limit vibration during the operation of the chopping secondary.[8] Many next generation very large telescope designs employ tangential spider vanes, such as the European Southern Observatory (ESO) New Technology Telescope (NTT).[9] This very large four telescope array uses a tangential spider assembly to position the secondary mirrors in the individual 8.5 m diameter telescopes.

Tangential spiders are a standard feature of many small amateur telescopes. In a classic amateur telescope making text by Texerau, tangential vanes are recommended as a means of improving the alignment stability of a Newtonian reflector. Texerau gives engineering drawings of a tangential vane spider.[10]

3. ANALYTICAL AND FINITE ELEMENT ANALYSIS

Analytical equations can be derived to calculate the torsional stiffness and angle of twist of both a tangential and radial vane assembly subjected to a torque. The equations for stiffness and angle of twist of the spider vane assemblies are as follows:

Downloaded From: http://proceedings.spiedigitallibrary.org/ on 09/24/2014 Terms of Use: http://spiedl.org/terms

Radial Vanes:

$$\theta = \frac{T}{(n\ K_r)}$$

$$K_r = \frac{4EI}{L} + \frac{12EIr}{L^2} + \frac{12EIr^2}{L^3} \tag{1}$$

Tangential Vanes:

$$\theta = \frac{T}{(n\ r^2\ K_t)}$$

$$K_t = \frac{AE}{L} \tag{2}$$

where:

θ = angle of twist
T = the torque applied to the spider assembly
K_r = the stiffness of one radial vane
K_t = the stiffness of one tangential vane
E = the Elastic Modulus of the vane material
r = the secondary mirror radius
n = the number of vanes
L = the vane length (see Figures 1 and 2)
b = the vane width (see Figures 1 and 2)
h = the vane thickness (see Figures 1 and 2)
I = the vane moment of inertia $\left(\frac{bh^3}{12}\right)$
A = the cross sectional area of the vane (bh)

It was desirable to check this analytical solution by constructing finite element models of two example spider assemblies and compare the results with the analytical equations. The example problem described below comes from the design of a secondary mirror and detector mount developed by RMR Design Group for Utah State University Space Dynamics Lab. The four vane configurations were modeled using the GIFTS finite element program. Figures 3 and 4 show the undeformed finite element models as constructed.

Example:

E = 10E6 psi (aluminum)
r = 2.5 in.
n = 4 vanes
L = 7.5 in. (radial) 10.0 in. (tangential)
b = 4.0 in.
h = 0.10 in.
T = 50 in-lbs

Downloaded From: http://proceedings.spiedigitallibrary.org/ on 09/24/2014 Terms of Use: http://spiedl.org/terms

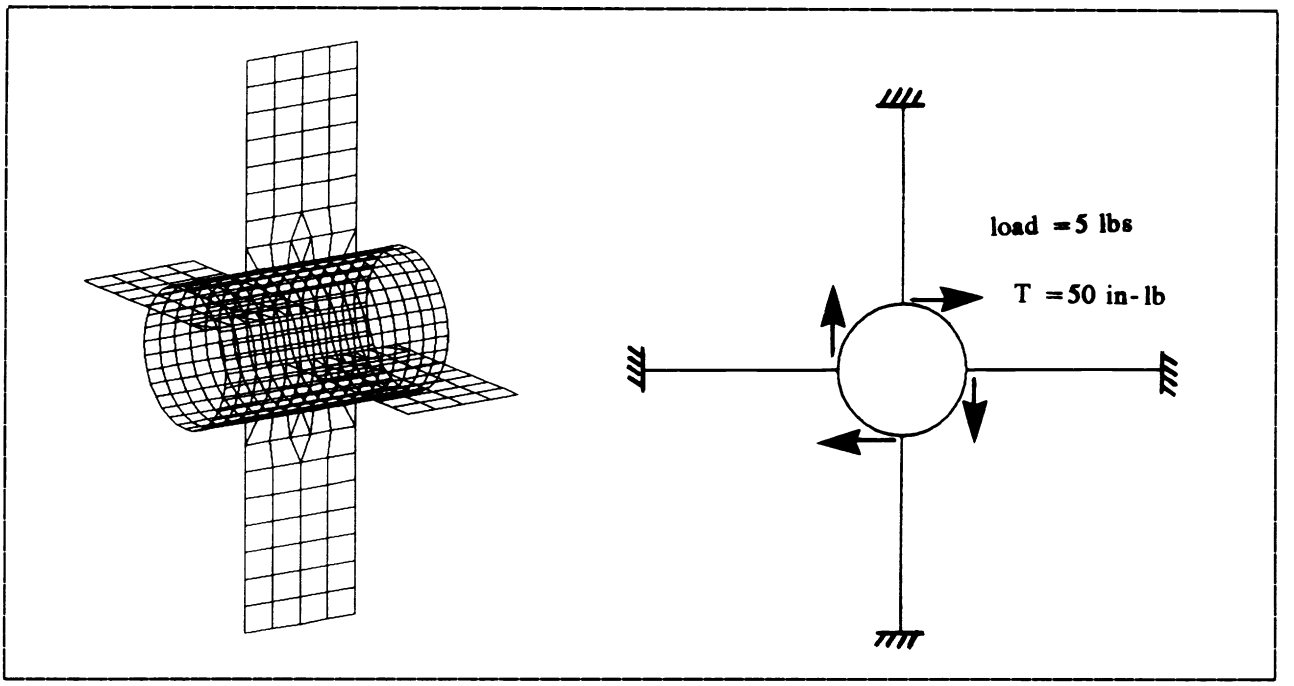

Figure 3. GIFTS finite element model of 4 vane radial spider configuration

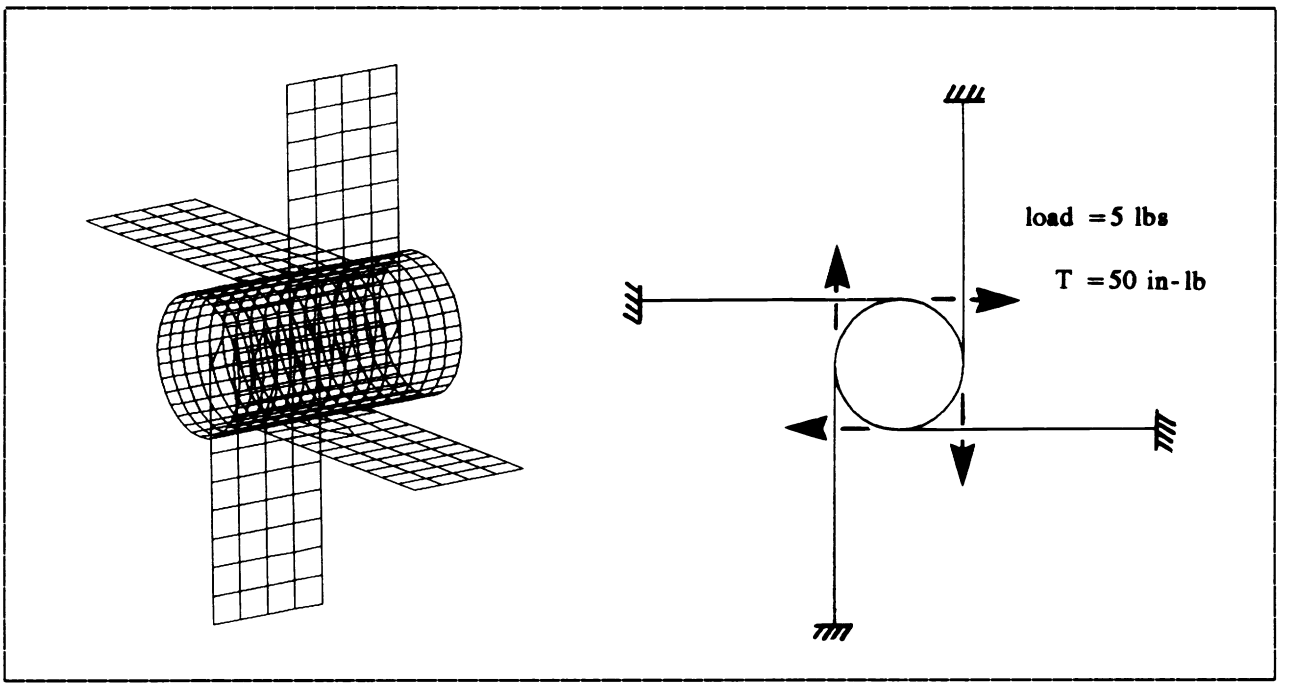

Figure 4. GIFTS finite element model of 4 vane tangential spider configuration

In both cases the vanes were 0.10 inches thick and made of aluminum alloy. The detector assembly was also made of aluminum alloy and was modeled as 1/4 inch thick tube. The vanes were fixed at the outer edge to approximate their attachment to the telescope when in service. A 50 in-lb torque was

Downloaded From: http://proceedings.spiedigitallibrary.org/ on 09/24/2014 Terms of Use: http://spiedl.org/terms

placed on the model by placing a 5 lb radial load at the center of each attachment point of the vanes (see Figures 3 and 4). With the boundary conditions and material properties in place, the torsional stiffness was examined for each system. The resulting angle of twist is presented for comparison.

RADIAL VANES	TANGENTIAL VANES
θ = 2.679E-3 (SOM)	θ = 5.000E-6 (SOM)
θ = 2.571E-3 (FEM)	θ = 4.896E-6 (FEM)

In both cases the agreement between the strength of materials solution and the finite element solution is within 5 percent. The deflected finite element models are shown in Figures 5 and 6. As illustrated by the above example, the torsional stiffness of the tangential vanes is approximately 500 times greater than that of the radial vanes. The torsional fundamental frequency of the tangential vanes is approximately 20 times greater than the radial vanes.

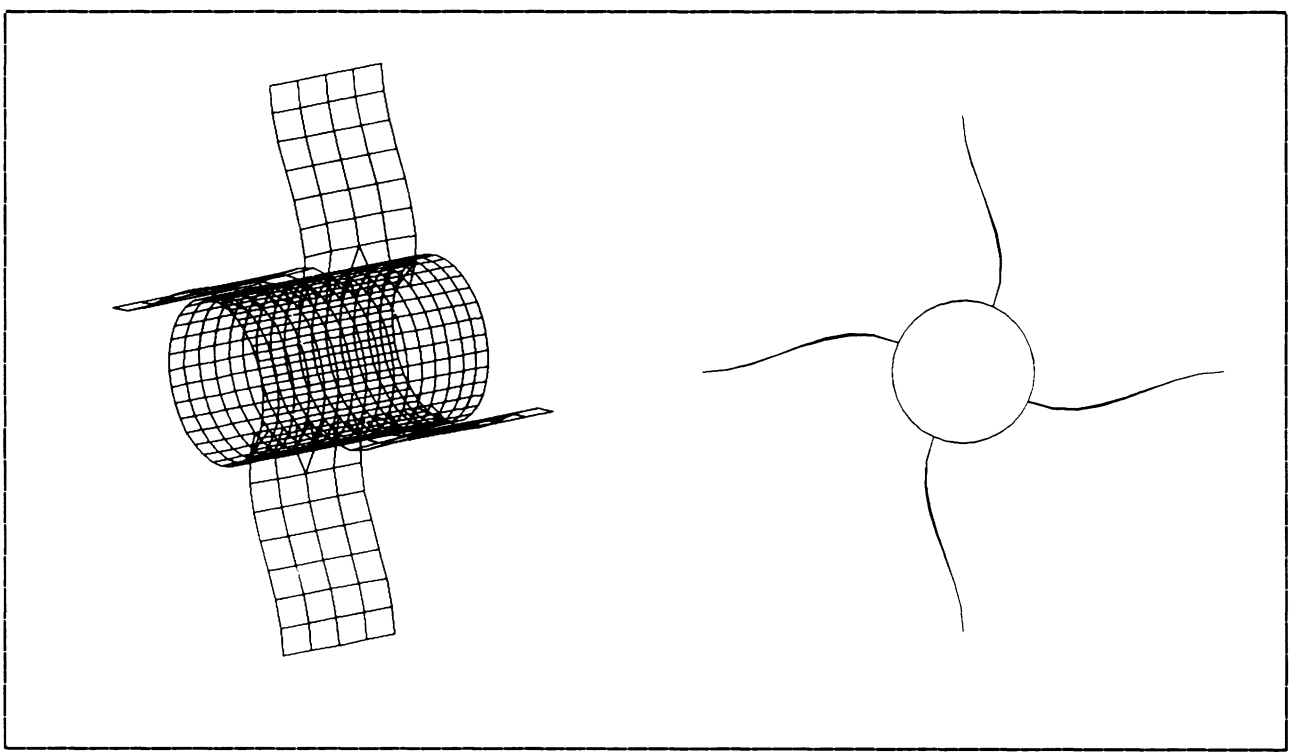

Figure 5. GIFTS finite element model of 4 vane radial spider configuration (deflected).

Downloaded From: http://proceedings.spiedigitallibrary.org/ on 09/24/2014 Terms of Use: http://spiedl.org/terms

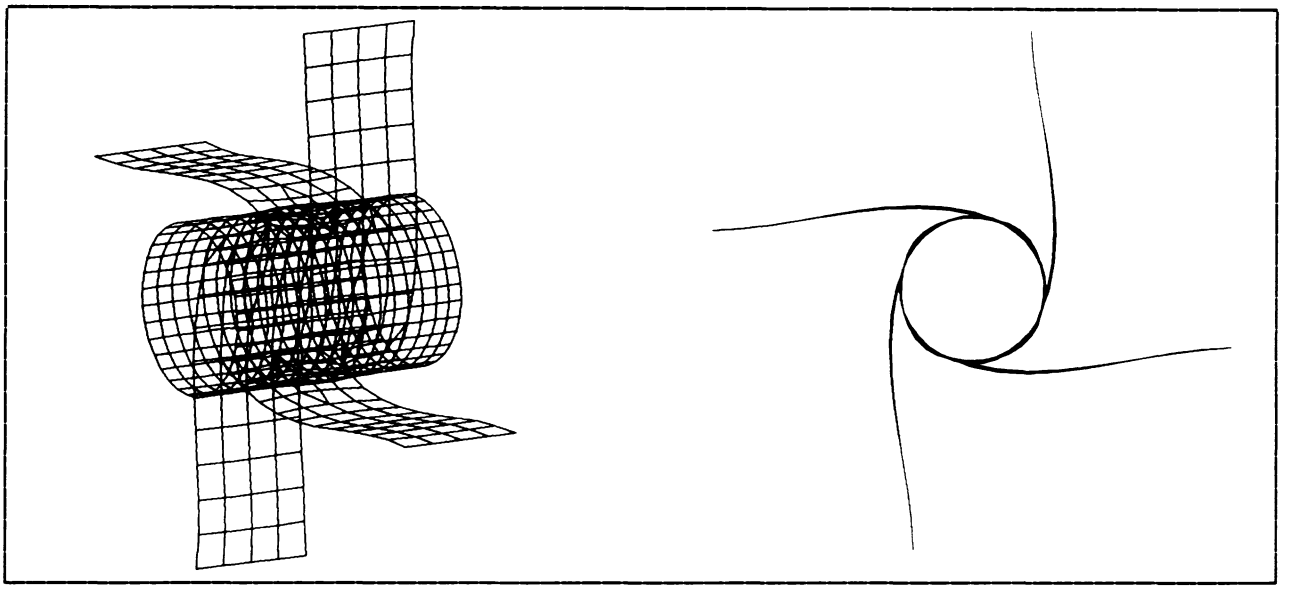

Figure 6. GIFTS finite element model of 4 vane tangential spider configuration (deflected).

In many instances where spider assemblies are used it is useful to taper the width (b) of the vanes for weight and space savings. For radial vanes if the average value of b is used for a taper no greater than 2 to 1, an agreement within 10 percent can be expected between FEM and SOM solutions. For a constant thickness tangential tapered vane, a formula can be derived which calculates the effective length of the vane based on the taper ratio and uses a b value equal to the width at the fixed end of the vane (w). This formula gives an effective length to be used in Equation 2. The FE model was in agreement to within 4 percent. Figure 7 summarizes the equations determined analytically for radial and tangential tapered vanes and also shows a finite element model of a radial tapered vane assembly.

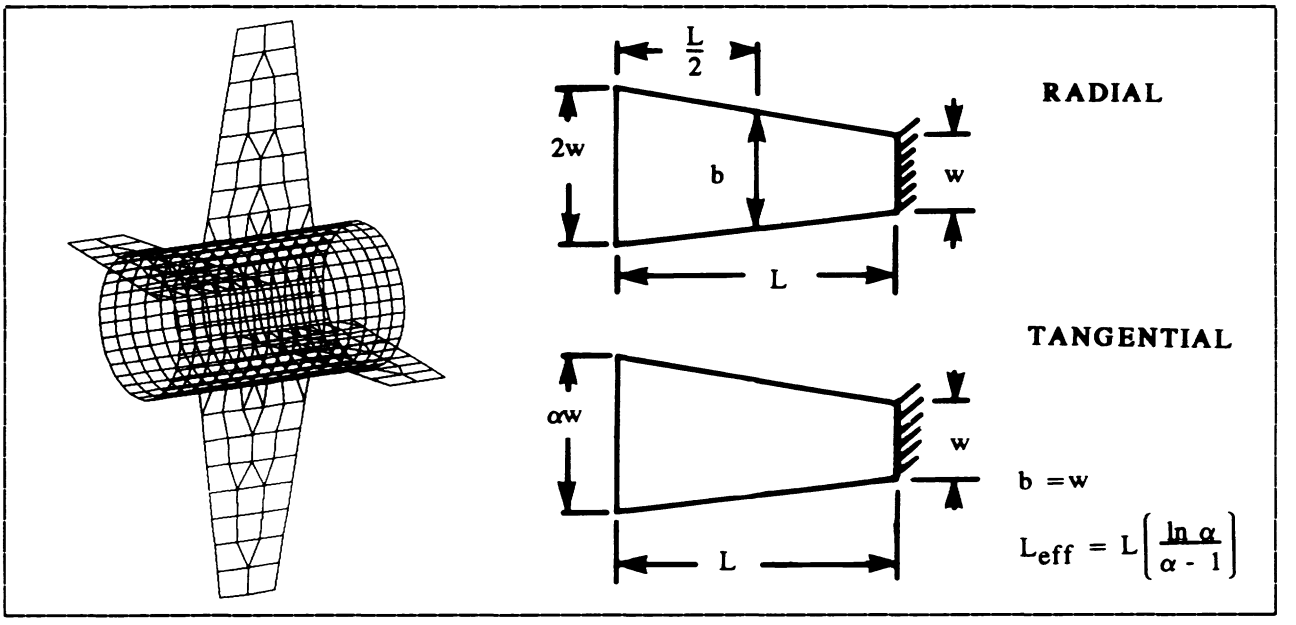

Figure 7. Finite element model of a tapered vane spider assembly

Downloaded From: http://proceedings.spiedigitallibrary.org/ on 09/24/2014 Terms of Use: http://spiedl.org/terms

A note should be made concerning the behavior of the two spider assemblies under gravity loading. The self weight induced deflections of the spiders under this loading may be of interest to the designer. Figure 8 illustrates this loading condition.

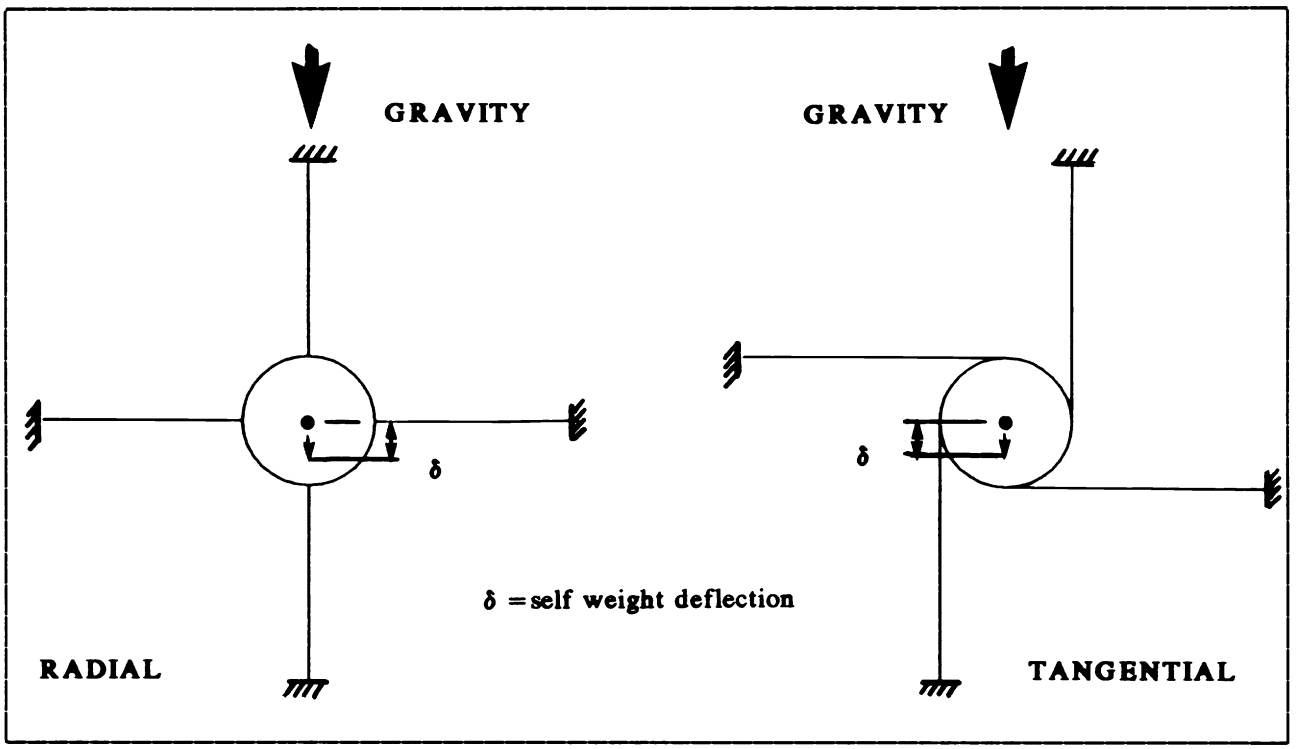

Figure 8. Gravity loading of radial and tangential spider assemblies

For both the radial and tangential assembly the stiffness is dominated by an AE/L term for this loading case. The deflections of the two assemblies therefore scales as the lengths of the vanes. In the case of the example problem, the self-weight deflection is 1.3 times better for the radial vanes than the tangential vanes simply due to the shorter length of the radial vanes. (The lengths in the example problem also are a ratio of 1.3).

4. DIFFRACTION EFFECTS

Diffraction effects from the unconventional tangential spider vanes are an obvious concern. Harvey's analytical work on spider diffraction indicates that diffraction effects for tangential vanes are roughly equivalent to those for radial vanes.[12] Light transmission loss is virtually the same for both radial and tangential vane systems. A program was written by Keith Doyle of the Optical Sciences Center which calculates the fractional encircled energy for a telescope using a spider assembly to support the secondary mirror. The approach used in this program is a simplified version of the work done by Harvey. Figure 9 shows the fractional encircled energy curves for the two example spider configurations. As shown in the figure, the tangential vanes perform only slightly worse than the radial vanes.

Downloaded From: http://proceedings.spiedigitallibrary.org/ on 09/24/2014 Terms of Use: http://spiedl.org/terms

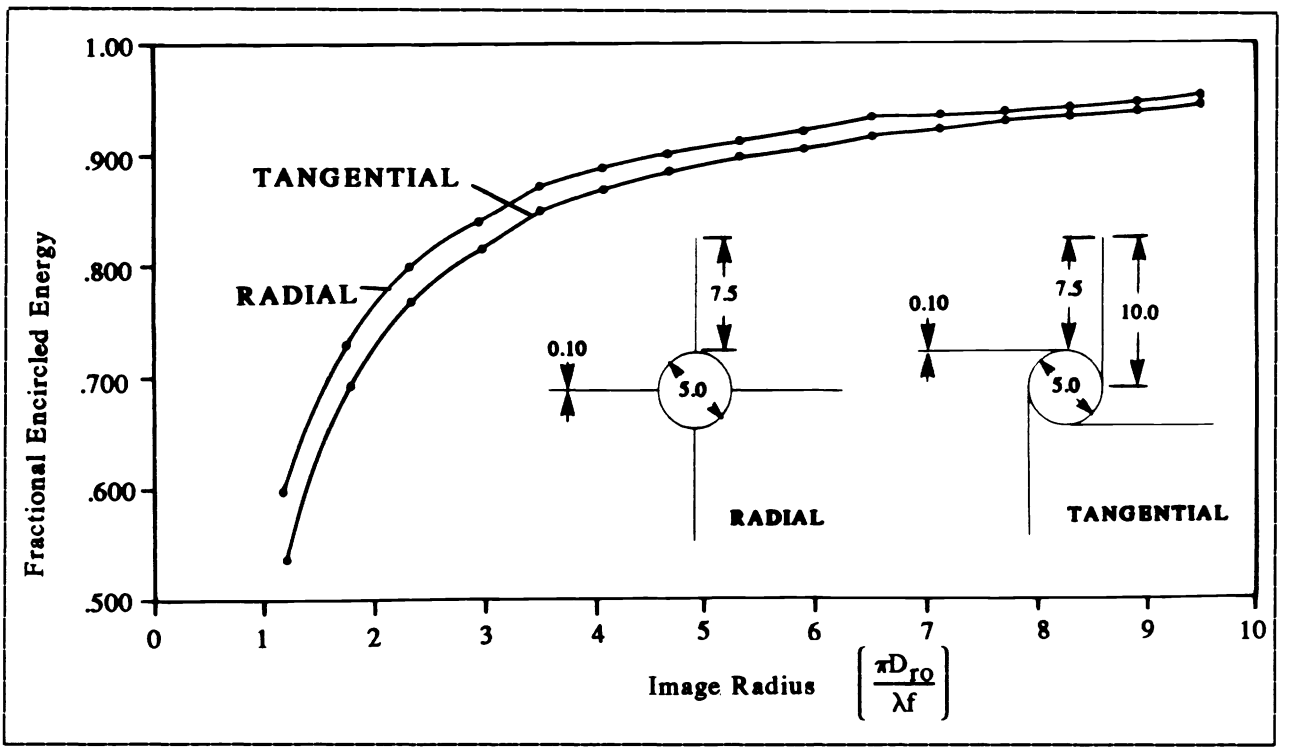

Figure 9. Fractional encircled energy curves are compared for two spider configurations.

5. FABRICATION AND ASSEMBLY

With two exceptions, conventional telescope structural practice is used in making a tangential spider vane support. The two exceptions are the structural connections between vane and secondary structure and the alignment of the vanes. To achieve superior torsional stiffness, the vanes of the tangential spider vane support must act as beams in bending rather than as truss members.

A bolted shear connection is required between the vanes and secondary structure of the tangential vane support. The radial vane support requires a bolted tension connection. Often a shear connection is stiffer than a tension connection. Superior stiffness of the shear connection is due to the short length of the stress area of the bolts. A tension connection stresses the bolts along their length, reducing the stiffness of the bolts and connection.

Diffraction effects due to tangential and radial vane supports are almost identical if the tangential vanes are properly aligned. Proper alignment consists of making opposing vanes parallel to each other. The tolerance between opposing vanes will depend upon the acceptable amount of diffraction introduced due to misalignment. As a rule of thumb, the opposing vanes are adequately aligned if the error is no greater than the width of the vane.

6. CONCLUSIONS

It is apparent from the historical discussion that there is considerable practical experience with tangential spider vanes for telescopes. Justification for the use of tangential spider vanes always includes improved stiffness and reduced vibration - two very important concerns for most projects. The analytical and finite element analysis supports this conclusion. The torsional stiffness of the

Downloaded From: http://proceedings.spiedigitallibrary.org/ on 09/24/2014 Terms of Use: http://spiedl.org/terms

tangential vanes is calculated to be 500 times higher than that of the radial vanes. The calculated torsional fundamental frequency for the tangential vanes is 20 times that of the radial vanes. It is also important to note that the use of tangential vanes does not significantly degrade the optical performance as compared to radial vanes. Based on the above theory and experience, tangential spider vanes are recommended for chopping mirrors where a high stiffness is required.

7. ACKNOWLEDGEMENTS

This study was partially supported by Utah State University Space Dynamics Lab through a consulting project done with the RMR Design Group Inc. The authors wish to acknowledge Dr. Ralph Richard of the Optical Sciences Center/RMR Design Group for his technical support in deriving the strength of material equations.

8. REFERENCES

1. E. H. Morse, "An Improved Support for Newtonian Secondary Mirrors," *Publ. Astron. Soc. Pacific,* Vol. 53, No. 12, pp. 128, (April, 1941).

2. F. J. Hargreaves, "Flat Mounting for Reflectors," *J. Brit. Astron. Assoc.,* Vol. 56, pp. 115, (June, 1946).

3. D. A. Loomis, "Surface Smoothness of Large Astronomical Mirrors: A Collection of Focaultgrams," in *NASA SP-233, Optical Telescope Technology,* pp. 153-164, NASA, Washington, DC, 1970.

4. J. W. Pepi, "TEAL RUBY - Design, Manufacture, and Test," *Proc. SPIE 216,* pp. 160 ff (1980).

5. P. Henneberg, and H. Schubert, " A New Telescope for Space Communication," *Proc. SPIE 1218,* pp. 160 ff (1990).

6. M. Detaille, and P. Houmault, "Telescope Considered as a Very High Gain Antenna," *Proc. SPIE 1218,* pp. 160 ff (1990).

7. A. R. Telkamp and E. A. Derby, "Design Considerations for Composite Materials Used in the Mars Observer Camera," *Proc. SPIE 1303,* pp. 416 ff (1990).

8. *SOFIA*, Doc. No. PD-2001, Sept. 1987, NASA Ames Research Center, Moffet Field, CA 94035.

9. M. Tarenghi and R. N. Wilson, "The ESO NTT (New Technology Telescope)," *Proc. SPIE 1114,* pp. 302 ff (1989).

10. J. Texerau, *How to Make a Telescope,* 2nd ed., William-Bell, Inc., Richmond, VA, 1984.

11. A. B. Meinel, and M. P. Meinel, "Wind Deflection Compensated, Zero-Coma Telescope Truss Geometries," *Proc. SPIE 628,* 403 (1986).

12. J. E. Harvey and C. Ftaclas, "Diffraction Effects of Secondary Mirror Spiders Upon Telescope Image Quality," *Proc. SPIE 965,* pp. 7 ff (1988).

Downloaded From: http://proceedings.spiedigitallibrary.org/ on 09/24/2014 Terms of Use: http://spiedl.org/terms